STORM WATER SEWER IMPROVEMENTS

to serve

Four H Addition

Lot 2, Blk. A

CITY OF WICHITA, KANSAS

Michael E. Lindebak, P.E. City Engineer

Private Project Number

1016 PPS (607861)

BENCHMARK:

"□" Top of Curb 15.7' East of the Southeast corner of Lot 2, Block A, Four H Addition.
Elevation: 146.22 (City Datum)

LEGAL DESCRIPTION:

Lot 2, Block A Four H Addition, Wichita, Sedgwick County, Kansas.

INDEX:

Plan/Profile Sheet	1
Inlet Detail	2
Copy Of Plat	3

GENERAL NOTES:

1. Contractor will be required to provide notice to utility companies a minimum of forty-eight (48) hours prior to any excavation, as follows:

   Kansas One-Call 887-2470

   The Contractor must notify the following in case of an emergency:

Cox Communication	262-4270
Kansas Gas Service Company	383-8600
Kansas Gas & Electric Company	383-8650
Peoples Gas Company	942-7600
Southwestern Bell Telephone Company	1-571-2911
City of Wichita Water Department	268-4508
City of Wichita Sewer Department	268-4071

2. Utility service lines, poles, valve boxes, meters, et cetera are to be adjusted as necessary by others prior to construction unless the plans specifically call for their adjustment by the Contractor or unless the plans specifically identify a utility to be adjusted by its owner during construction. Existing utilities and their location, as shown on the plans represent the best information obtainable for design and shall be field verified. The contractor will be required to work around existing utilities within the right-of-way which do not conflict with proposed construction.

3. All disturbed areas not intended for pavement or sidewalk construction shall be seeded with Kansas Premium Fescue Blend at a rate of 8 lb./1000 Sq. Ft., fertilized with a 16-20-0 ratio at a rate of 4 lb./1000 Sq. Ft., and mulched with Prairie Hay at a rate of 92 lb./1000 Sq. Ft. Mulch shall be "patted" with forks or punched into soil to reduce loss due to wind.

4. Trees and shrubs in public right-of-way which are in direct conflict with proposed new construction shall be removed by the Contractor with the Engineer's approval. Trees and shrubs which are not in direct conflict with proposed new construction shall be saved and protected from damage.

5. Contractor shall not start work on the project until the project inspector is assigned to the project and is present on the site. Any work done without inspection will be required to be uncovered for inspection.

6. Rubble from the removal of miscellaneous structures and excess excavation which is to be wasted shall be disposed of on sites to be provided by the Contractor. These sites shall be approved by the Engineer as to suitability, appearance and site location. Locations that, in the opinion of the Engineer, will leave an unsightly appearance will not be approved. All disposal sites must be approved by the Kansas Department of Health and Environment. Material either stockpiled or disposed of in a flood plain would require a Kansas State Board of Agriculture permit. Any material dumped in waters of the United States or wetlands is subject to U.S. Corps. of Engineers permitting regulations. Any material buried or stockpiled beyond approved construction limits would require additional archaeological investigations unless buried in a previously approved borrow location.

7. Cuts made to paved surfaces on public property will be repaired by the City's contractor and charged against the owner/applicant. Unit repair prices are available from the City at 268-4418. A surcharge may be applicable: call 268-4418 for details. Repair costs to be paid prior to release of sewer service if sewer services is affected. Contractor shall obtain permit prior to construction.

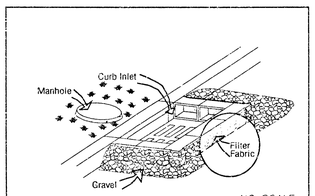

NO SCALE

NOTES:

Frequent maintenance is required to remove sediment deposits and buildup.

Wrap filter fabric around all CMU block and backfill with 2"-3" gravel rock to allow sediment deposits.

DO NOT cover inlet or grate with filter fabric.

CURB INLET w/GRATE

SEDIMENT BARRIER DETAIL

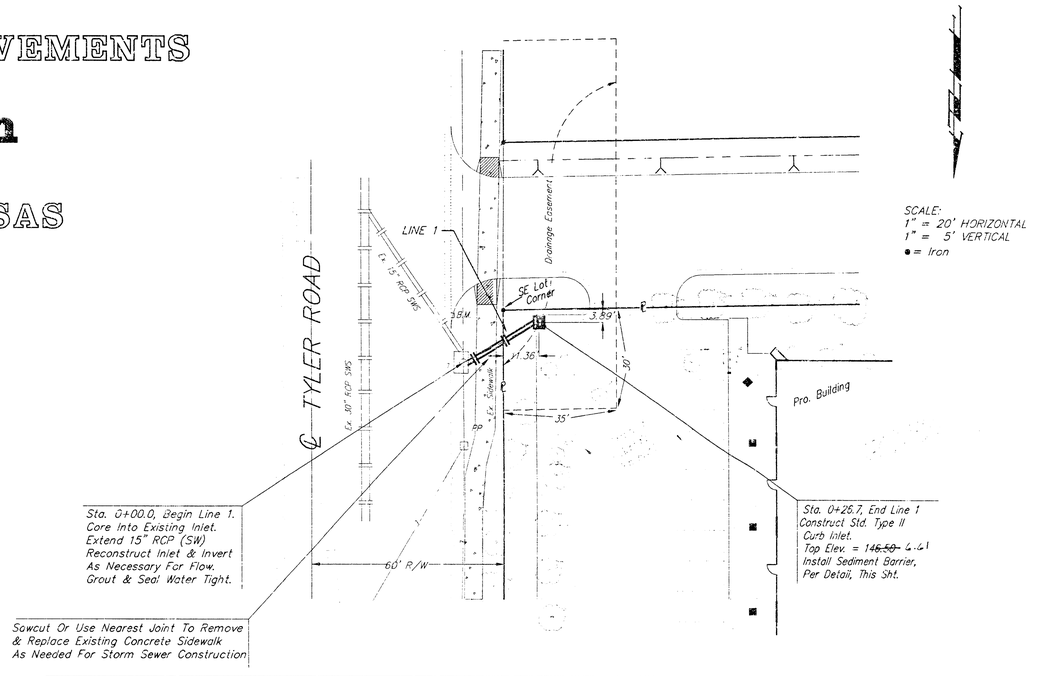

Sta. 0+00.0, Begin Line 1. Core Into Existing Inlet. Extend 15" RCP (SW) Reconstruct Inlet & Invert As Necessary For Flow. Grout & Seal Water Tight.

Sawcut Or Use Nearest Joint To Remove & Replace Existing Concrete Sidewalk As Needed For Storm Sewer Construction

Sta. 0+26.7, End Line 1 Construct Std. Type II Curb Inlet. Top Elev. = ~~146.50~~ 146.41 Install Sediment Barrier, Per Detail, This Sht.

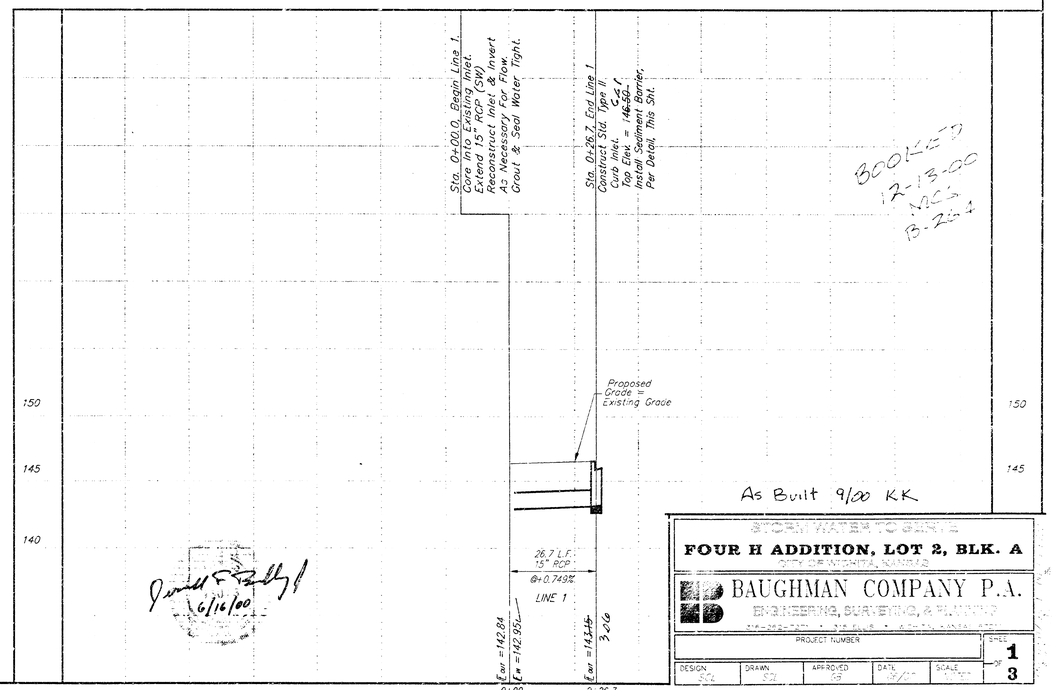

BOOKED 12-13-00 MC B-22-4

As Built 9/00 KK

Vicinity Map

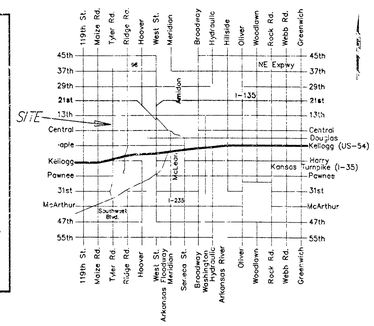

APPROVED AS NOTED
BY CITY ENGINEER OF WICHITA

Storm Sewers VRH 6/16/00

NOTE TO CONTRACTORS

Inspection and testing for this project is to be provided by a Licensed Consulting Engineering Firm under contract with the Owner/Developer. Said Inspection to be in accordance with the City of Wichita standard construction engineering practices and certified by a Licensed Professional Engineer. No work shall be performed in dedicated easements or public right-of-way by the Contractor without such inspection nor shall any work be commenced without written authorization by the City Engineer. All Construction and Materials shall comply with the City of Wichita Specifications and Standards (on file and available in the City Engineer's Office).

6/16/00

FOUR H ADDITION, LOT 2, BLK. A

CITY OF WICHITA, KANSAS

BAUGHMAN COMPANY P.A.

ENGINEERING, SURVEYING & PLANNING

PROJECT NUMBER					SHEET 1 OF 3
DESIGN SCL	DRAWN SCL	APPROVED GE	DATE 6/16/00	SCALE 1" = 20'	

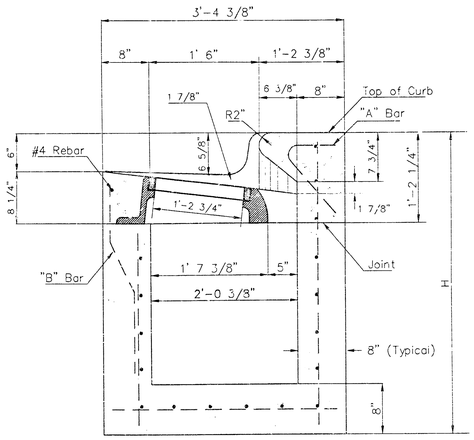

SECTION A-A

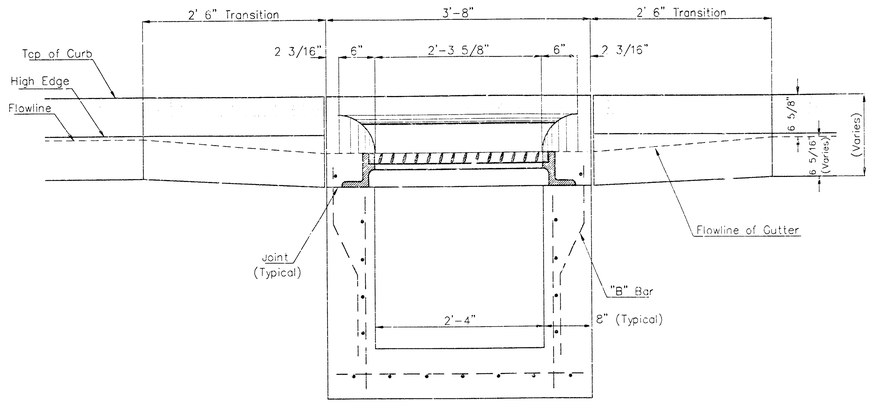

SECTION C-C

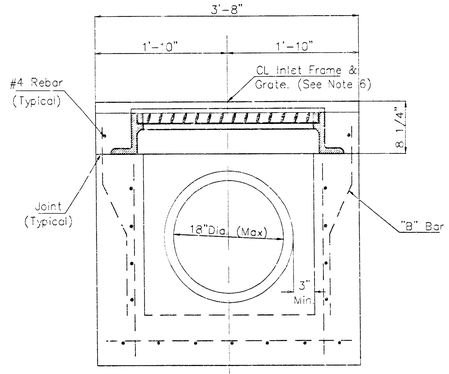

SECTION D-D

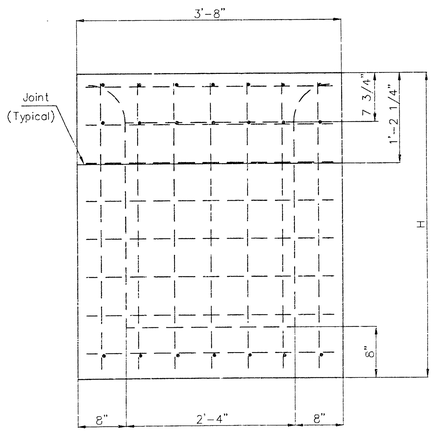

REAR WALL

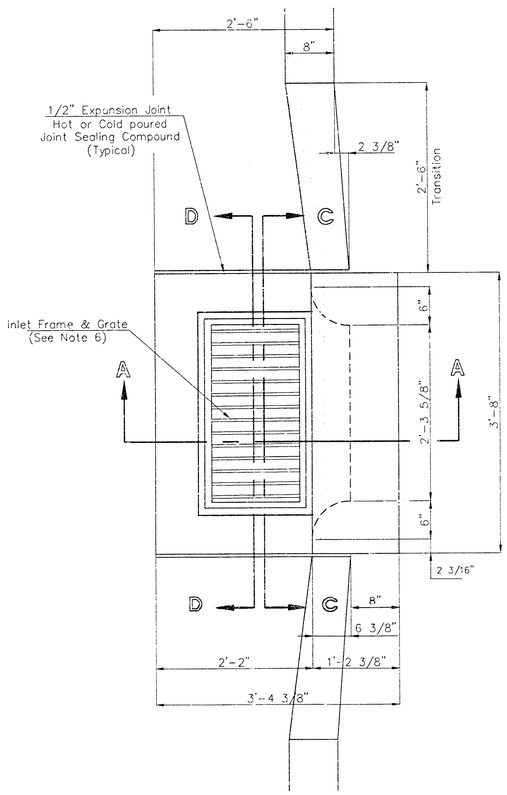

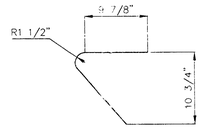

"A" Bar

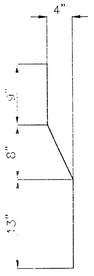

"B" Bar

General Notes

1. Use the concrete mix specified for the City of Wichita concrete pavement throughout. All exposed edges shall be finished with an edging tool. Reinforcing bars shall be bent around pipe.
2. Inlet invert shall be shaped with 8 sack mix concrete to create flow channels and to increase hydraulic efficiency such that the inlet will be self cleaning between all inlet and/or outlet pipes.
3. All bars are #4 with 6" spacing and shall have a minimum clearance of 1 1/2" inches unless otherwise noted on the plans.
4. When directed by the Engineer, a small opening may be required in the back of the inlet in order to drain a low area. Reinforcing bars will extend through the openings. No deductions in concrete quantities will be made for these openings.
5. No deductions will be made in pay length of curb, gutter, or curb and gutter through the inlet area.
6. Use Neenah R-3289 HV Single Inlet Frame and Grate or approved equal. Inlet frame to be proof load tested to 40,000 lbs. on unsupported side.
7. Reinforcing bars shall be cut or bent around pipes. No deduction in concrete quantities shall be made for pipe openings.
8. The vanes of the grate shall be oriented with respect to the flow arrows shown on the plans.

Redrawn Jan.1992

CITY OF WICHITA

STD. TYPE II CURB INLET

INLET OPENINGS - 6'x2'-6 5/8"

BAUGHMAN COMPANY P.A.

ENGINEERING, SURVEYING, & PLANNING

316-262-7221 • 315 ELLIS • WICHITA, KANSAS 67211

PROJECT NUMBER					SHEET
1016 PPS (607881)					2 OF 3
DESIGN	DRAWN 1/1987	APPROVED	DATE	SCALE NONE	

WICHITA, SEDGWICK COUNTY, KANSAS

FOUR H ADDITION

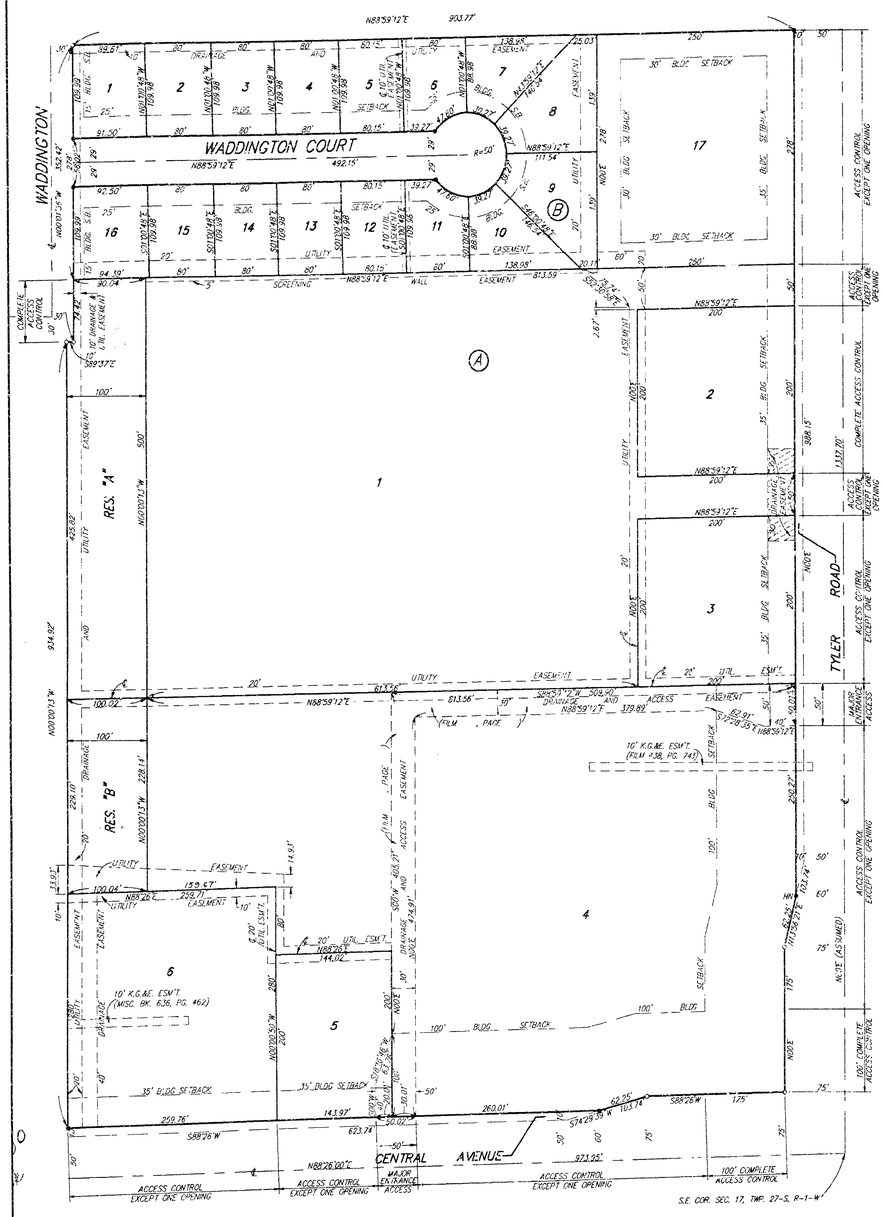

SCALE: 1" = 80'
o = 1/2" IRON (FOUND)
• = 1/2" REBAR W/ "BAUGHMAN" CAP (SET)
HN = "HILTI" NAIL (SET)

NOTE:
BUILDING SETBACK LINES WITHIN BLOCK "A" AS PER FOUR H COMMUNITY UNIT PLAN, DP-209.

Sedgwick County) We, Baughman Company, P.A., Surveyors in aforesaid county and state do hereby certify that we have surveyed and platted "FOUR H ADDITION", Wichita, Sedgwick County, Kansas and that the accompanying plat is a true and correct exhibit of the property surveyed, described as and being a replat of the following: All of Lot 1, 4-H Club Addition, Wichita, Sedgwick County, Kansas and all of Lot 1, 4-H Club 2nd Addition, Wichita, Sedgwick County, Kansas.

All being situated in the SE1/4 of Sec. 17, Twp. 27-S, R-1-W of the 6th P.M., Sedgwick County, Kansas.
Existing public easements and dedications being vacated by virtue of KSA 12-512(b).

Baughman Company, P.A.

Date 3/3/93

GREGORY F. SEVERNS REGISTERED LS-878 KANSAS LAND SURVEYOR

Gregory F. Severns, Surveyor

Know all men by these presents that we, the undersigned, have caused the land described in the surveyors certificate to be platted into lots, blocks, streets and reserves to be known as "FOUR H ADDITION", Wichita, Sedgwick County, Kansas. Reserve "A" and Reserve "B" are hereby reserved for landscaping, open space, screen wall construction, and drainage purposes. Reserve "A" shall be owned and maintained by the owner of Lot 1. Reserve "B" shall be owned and maintained by the owner of Lot 4. The streets are hereby dedicated to and for the use of the public. The utility easements are hereby granted as indicated for the construction and maintenance of all public utilities. The drainage easements are hereby granted as indicated for drainage purposes. The drainage and utility easements are hereby granted as indicated for drainage purposes and for the construction and maintenance of all public utilities. The access and drainage easements are hereby granted for access purposes and for drainage purposes. The screening wall easement is hereby granted as indicated for screening purposes. Access controls as depicted on the face of the plat are hereby granted to the City of Wichita, Kansas. The permitted entrance locations shall be as determined by the City Engineer of the City of Wichita, Kansas. Building Setback Lines within Block "A" as per Four H Community Unit Plan, DP-209.

T V Realty, L. L. C.

Stephen J. Mardis, Manager

State of Kansas) Sedgwick County) SS The foregoing instrument acknowledged before me, this 2nd day of March, 1993, by Stephen J. Mardis, Manager of T V Realty, L. L. C., on behalf of the Company.

My App't. Exp. 2-3-95

Richard E. Franz, Notary Public

MILDRED E. FRANZ NOTARY PUBLIC STATE OF KANSAS

We, the undersigned, holders of a mortgage on the above described property do hereby consent to this plat of "FOUR H ADDITION", an Addition to Wichita, Sedgwick County, Kansas.

Bank IV

Tim McGuigan, Vice President

State of Kansas) Sedgwick County) SS The foregoing instrument acknowledged before me this 9th day of MARCH, 1993, by Tim McGuigan, Vice President of Bank IV, on behalf of the bank.

My App't Exp. 1/1/96

Barbara S. Brewer, Notary Public

BARBARA S. BREWER Notary Public - State of Kansas Sedgwick County

Sedgwick County, Kansas, has been submitted to and approved by the Wichita-Sedgwick County Metropolitan Area Planning Commission, Wichita, Kansas.
Dated this 25th day of February, 1993.
Wichita-Sedgwick County Metropolitan Area Planning Commission.

L. O. Breckenridge, Jr., Chairman

Marvin S. Krout, Secretary

This plat approved and all dedications shown hereon accepted by the City Council of the City of Wichita, Kansas, this 23rd day of March, 1993.

Frank M. Kyle, Mayor

Pat Burnett, Deputy City Clerk

Entered on transfer record this 1st day of April, 1993.

Susan E. Crockett-Spoon, County Clerk

#127652

State of Kansas) Sedgwick County) SS This is to certify that this plat has been filed for record in the office of the Register of Deeds, this 1st day of APRIL, 1993, at 11:05 o'clock A.M. and is duly recorded.

Pat Kettler, Register of Deeds

BAUGHMAN COMPANY P.A.
Topeka, Kansas
Ed Resa, Dept.
316-262-2691 Wichita, Kansas 67211