APPROVED AS NOTED
BY CITY ENGINEER OF WICHITA

STORM WATER SEWERS VRH 10/16/00

NOTE TO CONTRACTOR

PUBLIC PROPERTY:
INSPECTION AND TESTING FOR THE SEWER LINE IS TO BE PROVIDED BY A LICENSED CONSULTING ENGINEERING FIRM UNDER CONTRACT WITH THE OWNER/DEVELOPER. SAID INSPECTION TO BE IN ACCORDANCE WITH THE CITY OF WICHITA STANDARD CONSTRUCTION ENGINEERING PRACTICES AND CERTIFIED BY A LICENSED PROFESSIONAL ENGINEER. NO WORK SHALL BE PERFORMED IN DEDICATED EASEMENTS OR THE PUBLIC RIGHT-OF-WAY BY THE CONTRACTOR WITHOUT SUCH INSPECTION NOR SHALL ANY WORK BE COMMENCED WITHOUT WRITTEN AUTHORIZATION BY THE CITY ENGINEER. ALL CONSTRUCTION AND MATERIALS SHALL COMPLY WITH THE CITY OF WICHITA SPECIFICATIONS AND STANDARDS (ON FILE AND AVAILABLE IN THE CITY ENGINEER'S OFFICE).

PRIVATE
STORM WATER SEWER PLANS FOR
CLUBHOUSE VILLAS

CITY OF WICHITA, KANSAS
MICHAEL E. LINDEBAK, CITY ENGINEER

INDEX CODE 607861
USER CODE 1030 PPS

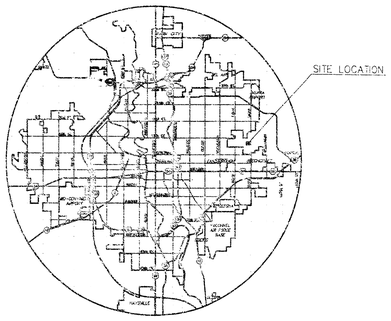

LOCATION MAP

GENERAL NOTES

1. THE CONTRACTOR SHALL BE RESPONSIBLE FOR PRESERVING PROPERTY IRONS. THE CONTRACTOR WILL BE REQUIRED TO RE-ESTABLISH ANY PROPERTY IRONS WHICH ARE DAMAGED OR DESTROYED BY HIS/HER CONSTRUCTION OPERATIONS. SUCH IRONS SHALL BE RE-ESTABLISHED BY A LICENSED LAND SURVEYOR IN ACCORDANCE WITH STATE LAWS.

2. EXISTING UTILITIES AND THEIR LOCATIONS, AS SHOWN ON THE PLANS REPRESENT THE BEST INFORMATION OBTAINABLE FOR DESIGN. LOCATION INFORMATION HAS BEEN OBTAINED FROM THE VARIOUS UTILITY COMPANIES AND IS EITHER FROM COMPANY RECORD DRAWINGS OR COMPANY PROVIDED FIELD LOCATIONS. THE PAL LOCATIONS SHOWN ARE NOT GUARANTEED. ADDITIONAL EXISTING UTILITIES MAY ALSO BE ENCOUNTERED.

3. CONTRACTOR WILL BE REQUIRED TO PROVIDE A MINIMUM ADVANCE NOTICE OF FORTY-EIGHT (48) HOURS TO UTILITY COMPANIES PRIOR TO STARTING ANY EXCAVATION AS FOLLOWS:

   KANSAS ONE-CALL 1-800-344-7233
   OR 687-2470 (LOCAL WICHITA)

   THE CONTRACTOR MUST NOTIFY THE FOLLOWING IN CASE OF ANY EMERGENCY:

SOUTHWESTERN BELL TELEPHONE COMPANY	1-517-2115
COX COMMUNICATIONS	262-0561
KANSAS GAS & ELECTRIC (ELECTRIC)	264-1141
KANSAS GAS & ELECTRIC (GAS) 832-3180 OR	832-3169
CITY OF WICHITA SEWER MAINTENANCE	268-4908
CITY OF WICHITA WATER DEPARTMENT	268-4908

4. RUBBLE FROM THE REMOVAL OF MISCELLANEOUS STRUCTURES AND EXCESS EXCAVATION WHICH IS TO BE WASTED SHALL BE DISPOSED OF ON SITES TO BE PROVIDED BY THE CONTRACTOR. THESE SITES SHALL BE APPROVED BY THE ENGINEER AS TO SUITABILITY, APPEARANCE AND SITE LOCATION. LOCATIONS THAT, IN THE OPINION OF THE ENGINEER, WILL LEAVE AN UNSIGHTLY APPEARANCE WILL NOT BE APPROVED. ALL DISPOSAL SITES MUST BE APPROVED BY THE KANSAS DEPARTMENT OF HEALTH AND ENVIRONMENT. MATERIAL EITHER STOCKPILED OR DISPOSED OF IN A FLOOD PLAIN WOULD REQUIRE A KANSAS STATE BOARD OF AGRICULTURE PERMIT. ANY MATERIAL DUMPED IN WATERS OF THE UNITED STATES OR WETLANDS IS SUBJECT TO U.S. CORPS OF ENGINEERS PERMITTING REGULATIONS. ANY MATERIAL BURIED OR STOCKPILED BEYOND APPROVED CONSTRUCTION LIMITS WOULD REQUIRE ADDITIONAL ARCHAEOLOGICAL INVESTIGATIONS UNLESS BURIED IN A PREVIOUSLY APPROVED BORROW LOCATION.

5. PRIOR TO LAYING SEWER LINE, THE CONTRACTOR SHALL EXPOSE AND VERIFY THE ELEVATION OF FLOW LINE OF EXISTING LINE AND NOTIFY THE ENGINEER OF ANY DEVIATION FROM THE PLANS.

6. TREES AND SHRUBS IN PUBLIC RIGHT-OF-WAY WHICH ARE IN DIRECT CONFLICT WITH PROPOSED NEW CONSTRUCTION SHALL BE REMOVED BY THE CONTRACTOR WITH THE ENGINEER'S APPROVAL. TREES AND SHRUBS WHICH ARE NOT IN DIRECT CONFLICT WITH PROPOSED NEW CONSTRUCTION SHALL BE SAVED AND PROTECTED FROM DAMAGE.

7. CONTRACTOR SHALL RESEED AND MULCH ALL DISTURBED AREAS. COST SHALL BE SUBSIDIARY TO SITE RESTORATION.

8. CONTRACTOR SHALL PROVIDE TEMPORARY SEDIMENT CONTROL AT ALL INLETS. SUCH CONTROL SHALL BE MAINTAINED UNTIL AND UPON GERMINATION OF SEEDING. ACCEPTABLE MEANS OF CONTROL SHALL BE APPROVED BY ENGINEER.

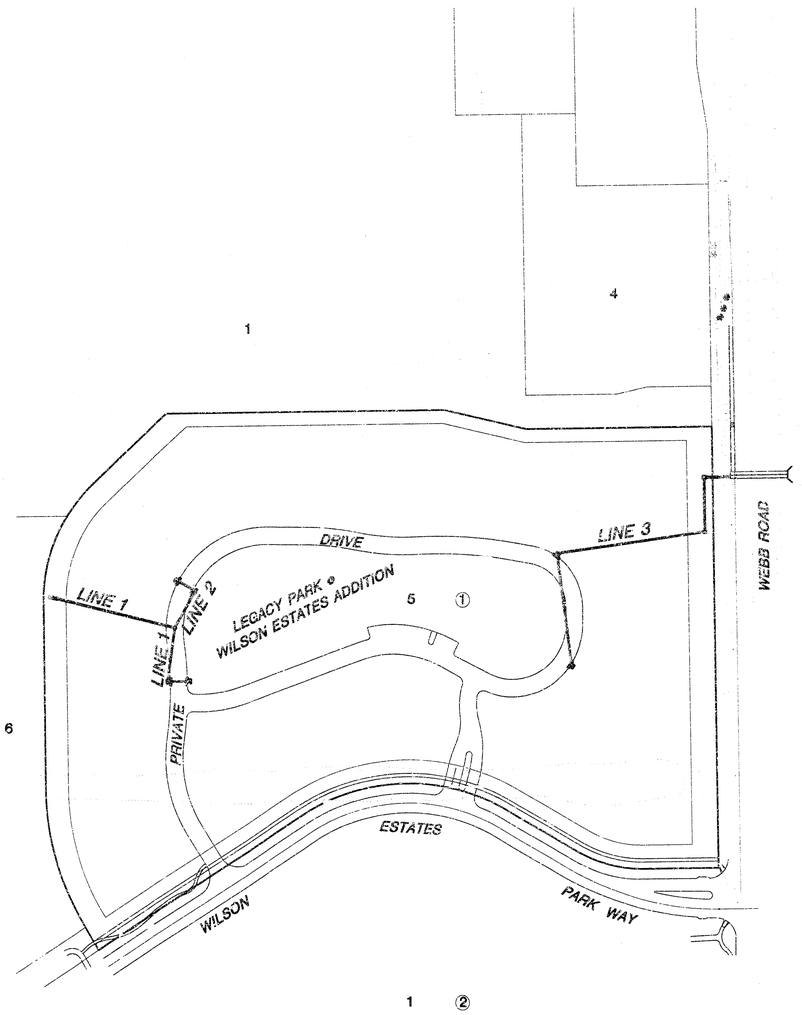

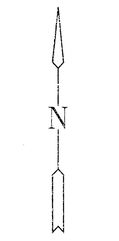

SCALE: 1" = 100'
LEGEND

INDEX TO DRAWINGS

SHEET NO.	DESCRIPTION
1	TITLE SHEET
2-5	SWS DETAILS
6	EROSION CONTROL DETAILS
7-8	PLAN/PROFILE
9	FINAL PLAT

BENCHMARKS

BM #1 CITY OF WICHITA BENCH MARK DISC IN NE CORNER CONCRETE VAULT, 400' WEST OF WEBB ROAD ON NORTH SIDE OF 21ST STREET NORTH. ELEV.=205.70



M.K.E.C.
411 N. WEBB ROAD
WICHITA, KS. 67206
316-684-9600

CLUBHOUSE VILLAS
PROJECT NAME

STORM WATER SEWER PLANS
SHEET TITLE

JTC	DAC	GJA
DESIGN BY:	DRAWN BY:	CHECKED BY:
AUGUST 2000	99187	1 / 9
DATE	JOB NO.	SHEET/OF

14-04-09-11

Sep 25 14:34:56 2000

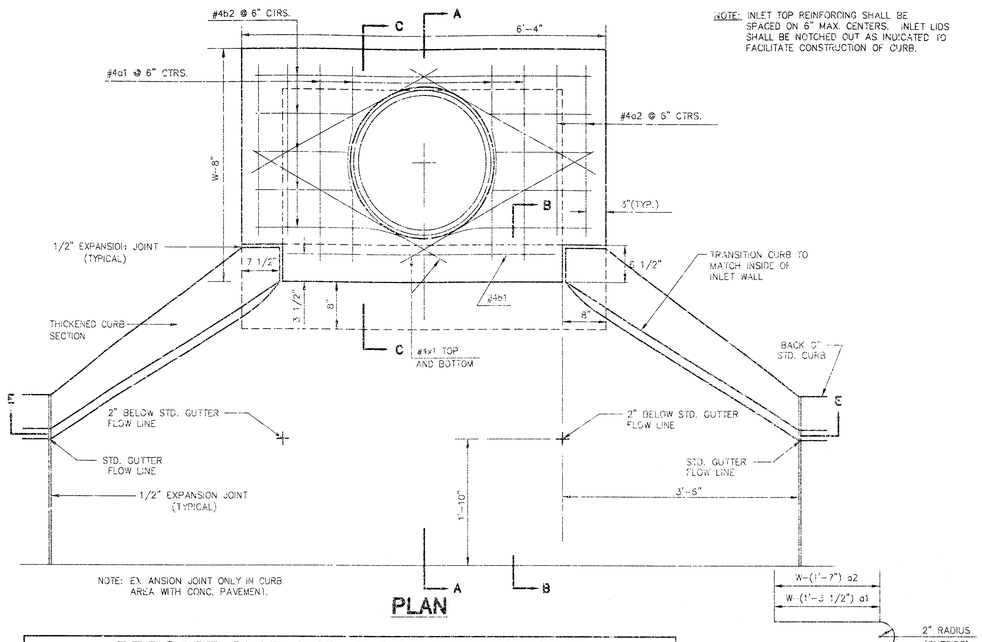

NOTE: EXPANSION JOINT ONLY IN CURB AREA WITH CONC. PAVEMENT.

PLAN

NOTE: INLET TOP REINFORCING SHALL BE SPACED ON 6" MAX. CENTERS. INLET LIDS SHALL BE NOTCHED OUT AS INDICATED TO FACILITATE CONSTRUCTION OF CURB.

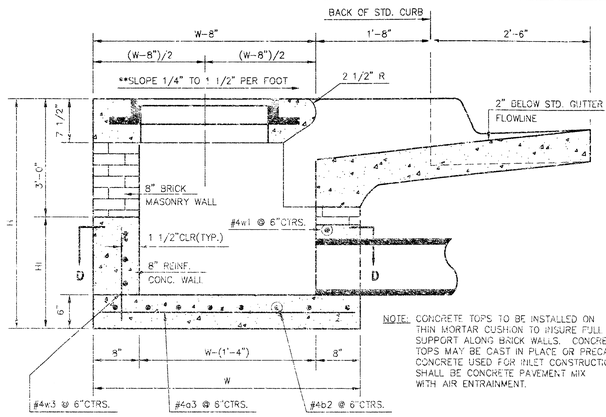

SECTION A-A

NOTE: CONCRETE TOPS TO BE INSTALLED ON THIN MORTAR CUSHION TO INSURE FULL SUPPORT ALONG BRICK WALLS. CONCRETE TOPS MAY BE CAST IN PLACE OR PRECAST CONCRETE USED FOR INLET CONSTRUCTION SHALL BE CONCRETE PAVEMENT MIX WITH AIR ENTRAINMENT.

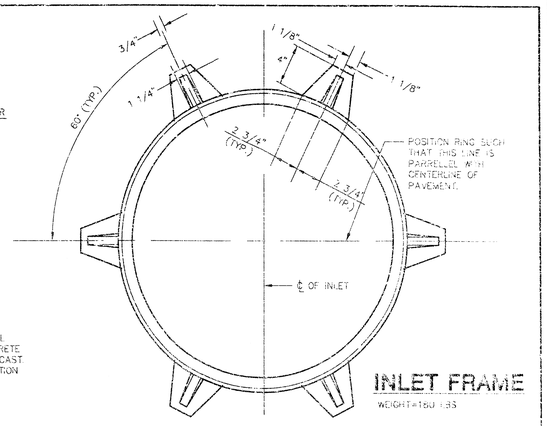

INLET FRAME

WEIGHT=150 LBS

PRECAST SLAB AND FLOOR REINFORCING

		W=4'-4"		W=5'-4"		W=6'-4"		W=7'-4"		W=8'-4"	
MARK	SIZE	NO.	LENGTH	NO.	LENGTH	NO.	LENGTH	NO.	LENGTH	NO.	LENGTH
*a1	#4	6	6'-7"	6	8'-7"	6	10'-7"	6	12'-7"	6	14'-7"
a2	#4	4	6'-0"	4	8'-0"	4	10'-0"	4	12'-0"	4	14'-0"
a3	#4	13	4'-1"	13	5'-1"	13	6'-1"	13	7'-1"	13	8'-1"
b1	#4	1	4'-9"	1	4'-9"	1	4'-9"	1	4'-9"	1	4'-9"
*b2	#4	23	6'-1"	29	6'-1"	35	6'-1"	41	5'-1"	47	6'-1"
x1	#4	8	3'-10"	8	4'-2"	8	4'-5"	8	4'-10"	8	5'-2"

WALL REINFORCING

		W=4'-4"		W=5'-4"		W=6'-4"		W=7'-4"		W=8'-4"	
MARK	SIZE	NO.	LENGTH*	NO.	LENGTH	NO.	LENGTH	NO.	LENGTH	NO.	LENGTH
w1	#4	①	6'-1"	①	6'-1"	①	6'-1"	①	6'-1"	①	6'-1"
w2	#4	①	4'-1"	①	5'-1"	①	6'-1"	①	7'-1"	①	8'-1"
w3	#4	32	②	36	②	40	②	44	②	48	②

* FIELD BEND OR CUT REINFORCING AS REQUIRED FOR CLEARANCE
① 4(HI-12"); (HI-12") ROUND DOWN TO NEAREST 0.5'
② HI-3"

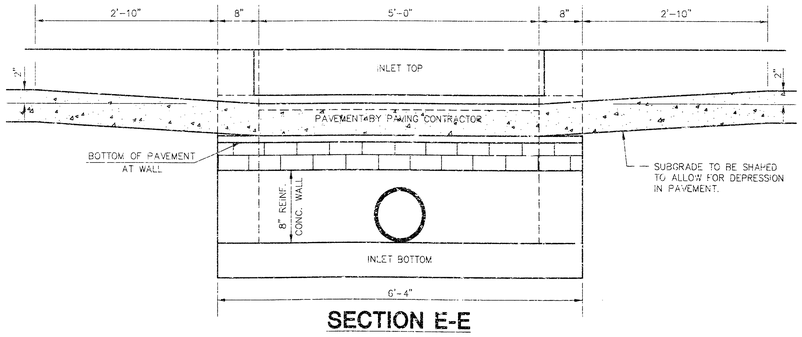

SECTION E-E

BENDING DIAGRAM

STANDARD CURB INLET PRECAST TOPS			
W	PRE-CAST TOP SIZE	PIPE SIZE	CU. YD. CONC.
4'-4"	3'-8"x6'-4"x7 1/2"	21" & SMALLER	0.38±
5'-4"	4'-8"x6'-4"x7 1/2"	24" & 30"	.51±
6'-4"	5'-8"x6'-4"x7 1/2"	36" & 42"	.64±
7'-4"	6'-8"x6'-4"x7 1/2"	48" & 54"	.77±
8'-4"	7'-8"x6'-4"x7 1/2"	60" & 66"	.90±

NOTE: CONTRACTOR SHALL HAVE THE OPTION OF CONSTRUCTING 8" BRICK MASONRY WALLS BETWEEN THE CONCRETE INLET BASE AND TOP ON THIS INLET WHEN W=6'-4" AND H=7'-0" OR LESS.

ADDITIONAL CURB AND GUTTER CONSTRUCTION NECESSARY TO CONNECT SET-BACK INLET TO PAVEMENT WILL BE PAID FOR AT THE UNIT PRICE BID FOR EACH INLET HOOKUP.

INLET INVERT SHALL BE SHAPED WITH 8 SACK SAND MIX CONCRETE TO CREATE FLOW CHANNELS AND TO INCREASE HYDRAULIC EFFICIENCY SUCH THAT THE INLET WILL BE SELF CLEANING BETWEEN ALL INLET AND/OR OUTLET PIPES.

THE ENDS OF ALL PIPES INSTALLED IN INLETS SHALL BE CUT OFF FLUSH WITH THE INSIDE FACE OF THE INLET WALL.

**NOTE: SLOPE OF INLET TOPS TO MATCH SIDEWALK OR PARKING SLOPES WITHIN LIMITS INDICATED.

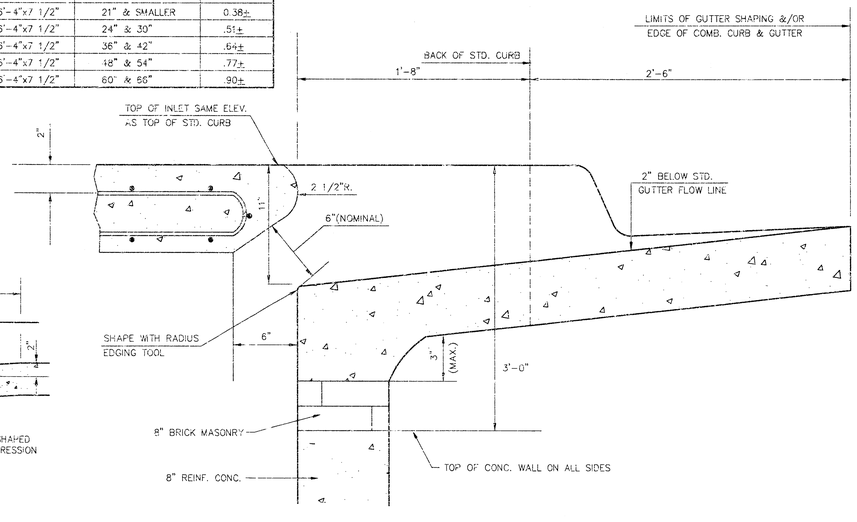

SECTION B-B

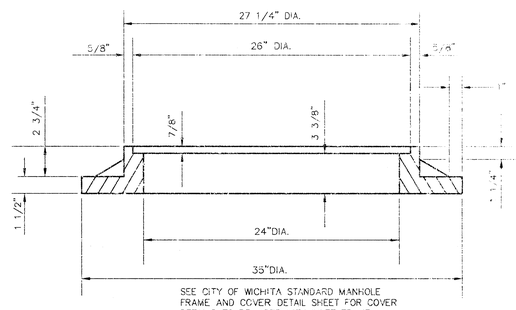

SEE CITY OF WICHITA STANDARD MANHOLE FRAME AND COVER DETAIL SHEET FOR COVER DETAILS TO BE USED WITH INLET FRAME.

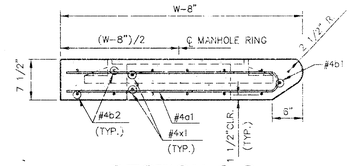

SECTION C-C

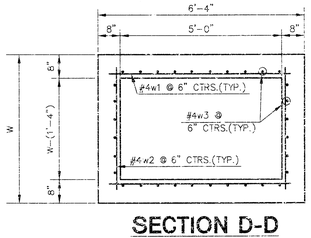

SECTION D-D

REVISED: 2-16-89 C.O.W.

STANDARD TYPE 1A CURB INLET

INLET OPENING=6"x5'-0"

JUNE 1964

CITY OF WICHITA, KANSAS

2/9

Design C.O.W.	Checked by	Checked by	
Drawn by	Date	Date JULY 1996	Job No. 99187001

H:\CIVIL\99187\dwg\99187d01.DWG

NOTE: GRATES SHALL BE IMPRINTED ON THE TOP SURFACE WITH "CITY OF WICHITA" USING LETTERS AT LEAST 1" IN HEIGHT. OTHER MARKING METHODS MAY BE USED ONLY IF APPROVED BY THE ENGINEER.

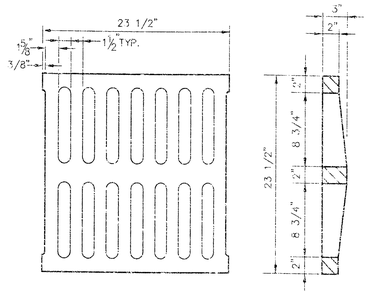

24"x24" GRATE DETAIL

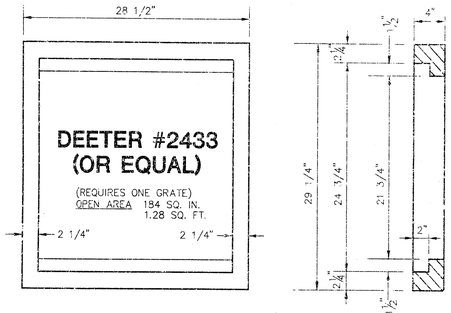

SINGLE 24"x24" FRAME DETAIL

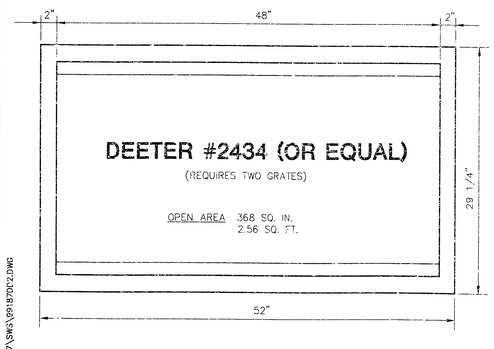

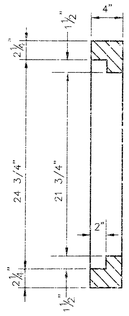

DOUBLE 24"x24" FRAME DETAIL

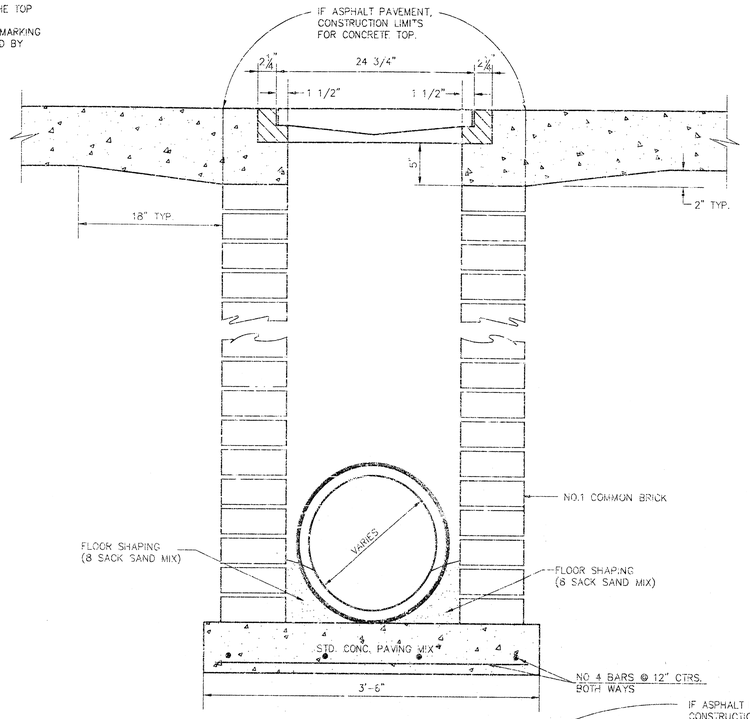

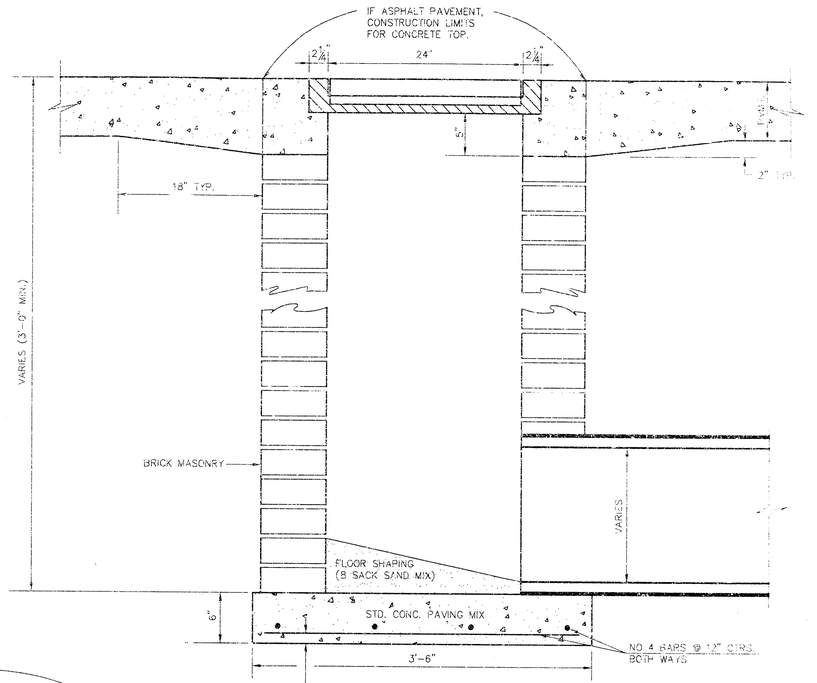

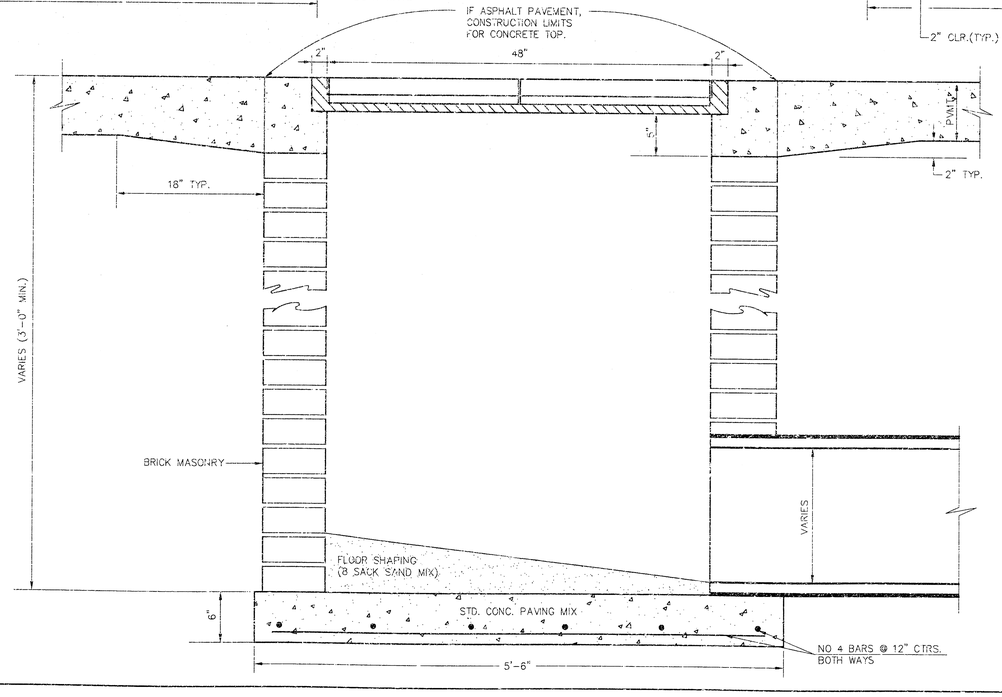

ORIFICE EQUATION		
$Q=C*A*\sqrt{2gh}$		C=0.60
h (DEPTH)	#2433 (SINGLE)	#2434 (DOUBLE)
0.1	1.95 cfs	3.89 cfs
0.2	2.75 cfs	5.50 cfs
0.3	3.37 cfs	6.74 cfs
0.4	3.89 cfs	7.78 cfs
0.5	4.35 cfs	8.70 cfs
0.6	4.77 cfs	9.53 cfs
0.7	5.15 cfs	10.30 cfs
0.8	5.50 cfs	11.01 cfs
0.9	5.84 cfs	11.67 cfs
1.0	6.15 cfs	12.30 cfs

REVISED: 5-8-90 JNJ

DROP INLET DETAILS

CITY OF WICHITA, KANSAS

Design C.O.W.	Checked by	Checked by	3/9
Drawn by	Date	Date: JUNE 2000	Job No. 99187

H:\CIVIL\99187\SWS\99187DD2.DWG

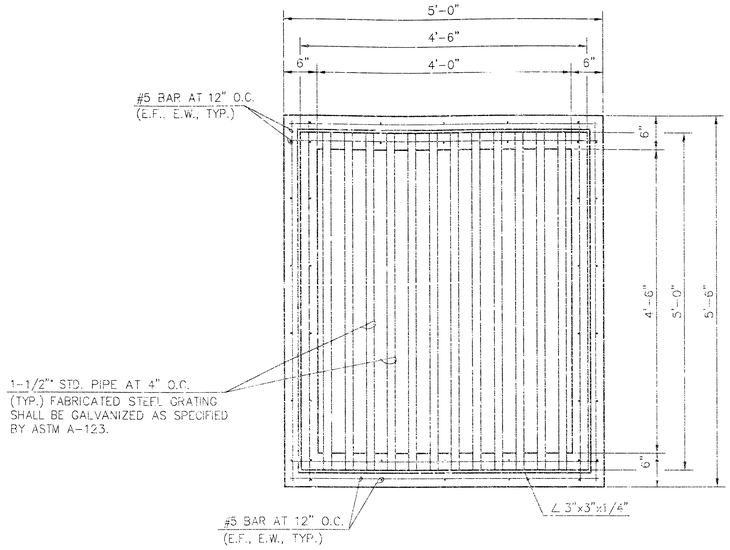

PLAN VIEW

CONTRACTOR MAY SUBSTITUTE 8" BRICK WALL FOR 8" REINFORCED CONCRETE WALL.

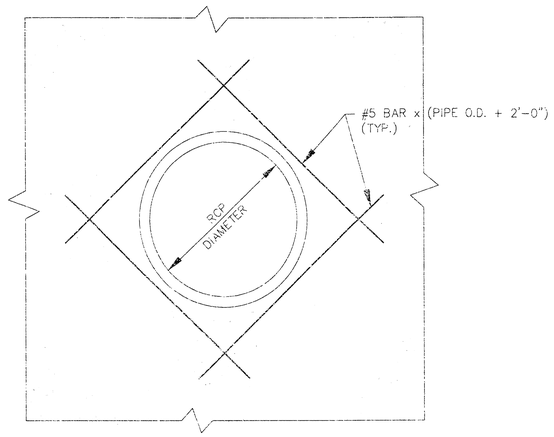

NOTE:
CUT REINFORCING AS REQUIRED TO CLEAR RCP.

TYPICAL REINFORCING AT PIPE

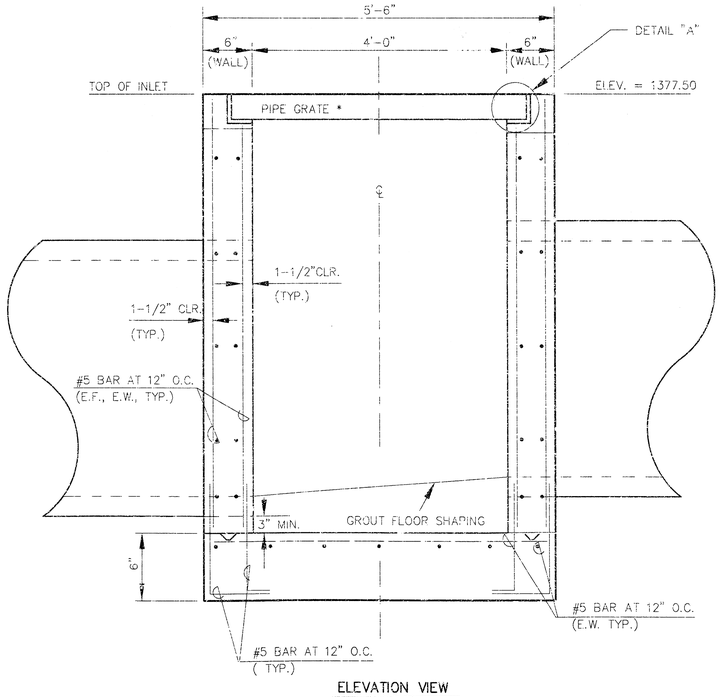

ELEVATION VIEW

REINFORCED CONCRETE AREA INLET

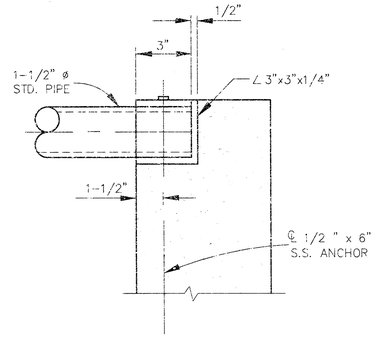

NOTE:
FABRICATED STEEL GRATING SHALL BE GALVANIZED AS SPECIFIED BY ASTM A-123.

DETAIL "A"

MATERIAL SPEC'S

MORTAR – TYPE "M"
BRICK – ASTM C62 GRADE MW
STEEL – ASTM A36 OR EQUIVALENT GALV. ASTM A-123 STDS.
CONCRETE – f'_c = 4,000 PSI MINIMUM WITH 6 SACKS OF CEMENT PER CUBIC YARD MINIMUM.

ORIFICE EQUATION				
$Q=C*A*\sqrt{2gh}$				
h (DEPTH)	2g	C	A	Q
0.5	64.4	0.7	8.625	34.3 cfs
1.0	64.4	0.6	8.625	41.5 cfs
2.0	64.4	0.6	8.625	58.7 cfs
2.0	64.4	0.7	8.625	68.5 cfs
3.0	64.4	0.6	8.625	71.9 cfs
4.0	64.4	0.6	8.625	83.1 cfs
5.0	64.4	0.6	8.625	92.9 cfs
6.0	64.4	0.6	8.625	101.7 cfs
7.0	64.4	0.6	8.625	109.9 cfs
8.0	64.4	0.6	8.625	117.5 cfs

MID-KANSAS ENGINEERING
CONSULTANTS, INC.
411 N. WEBB ROAD
WICHITA, KS. 67206
316-684-9600

CLUBHOUSE VILLAS
PROJECT NAME

REINFORCED CONCRETE AREA INLET
SHEET TITLE

MKEC	MKEC	MKEC
DESIGN BY:	DRAWN BY:	CHECKED BY:
AUGUST 2000	99187DD4	4 / 9
DATE	JOB NO.	SHEET/OF

Sep 25, 14:30:10 2000
H:\CIVIL\99187\SWG\99187DD4.DWG

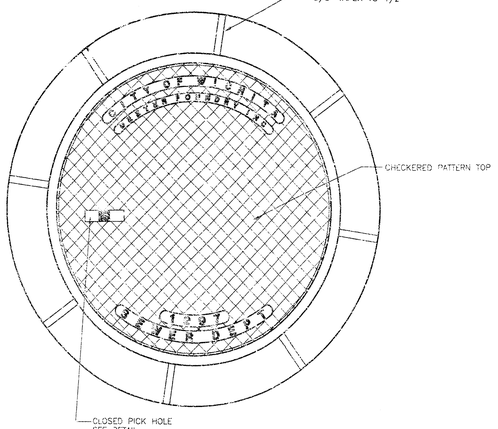

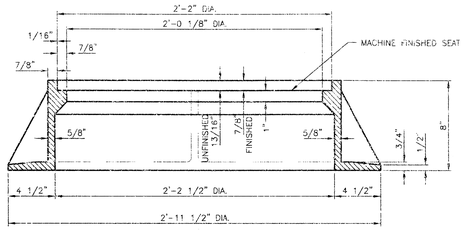

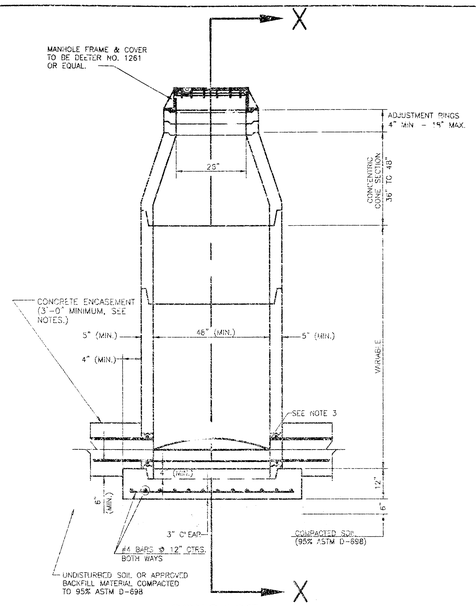

PRECAST STANDARD MANHOLE TYPE "A"

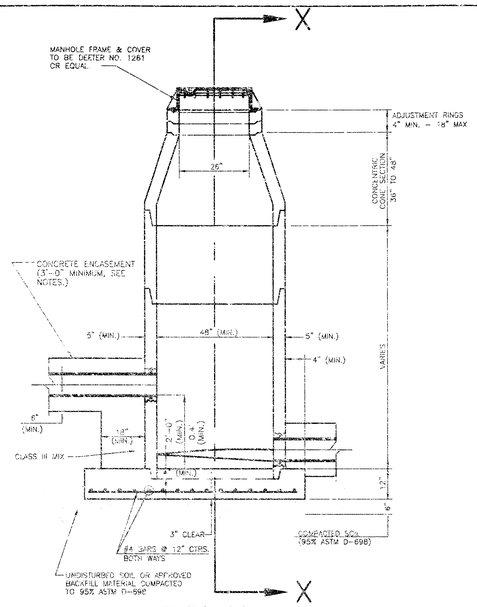

PRECAST INSIDE DROP MANHOLE TYPE "B"

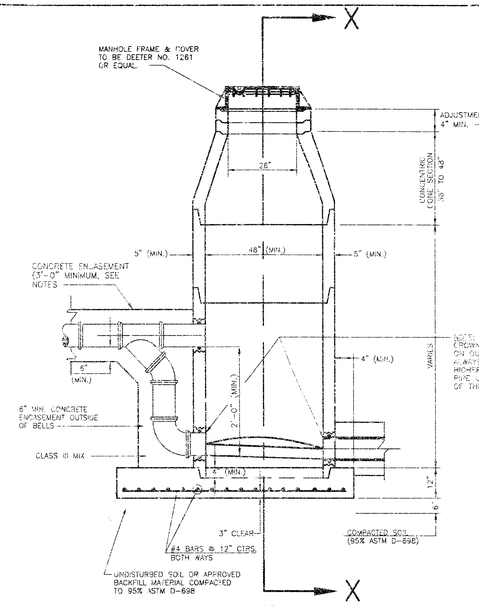

PRECAST OUTSIDE DROP MANHOLE TYPE "C"

PRECAST MANHOLE NOTES

1. IF, IN THE OPINION OF THE ENGINEER, THE NATIVE SUBGRADE APPEARS UNSTABLE, THE CONTRACTOR WILL HAVE THE OPTION TO COMPACT SUBGRADE AS SHOWN OR INCREASE THE THICKNESS OF THE MANHOLE BASE AS DIRECTED BY THE ENGINEER.
2. STEEL REINFORCING WILL BE REQUIRED IN ALL MANHOLE BASES.
3. APPROVED FLEXIBLE WATERSTOP GASKETS WHICH MEET OR EXCEED THE TEST REQUIREMENTS OF ASTM C 923 SHALL BE INSTALLED TO JOIN THE SEWER TO THE MANHOLE WALL WHEN PLASTIC PIPE IS USED. SEWER PIPE EXTENDING FROM MANHOLES SHALL BE SUPPORTED WITH CONCRETE ENCASEMENT A MINIMUM OF 3 FEET FROM THE MANHOLE WALL.
4. THE MANHOLE FRAME SHALL BE SEATED ON AN APPROVED BUTYL-RUBBER SEALANT TO PROVIDE A WATER-TIGHT SEAL BETWEEN THE MANHOLE ADJUSTMENT RING AND THE MANHOLE FRAME.
5. GASKETED PIPE PLUGS AND CAPS SHALL BE PROVIDED BY THE PIPE SUPPLIER.
6. ALL MANHOLE CONSTRUCTION SHALL BE WATER TIGHT.
7. TOP OF MANHOLE FLAT SLAB SHALL BE AT LEAST 3 INCHES BELOW THE FLOW LINE OF THE OUTLET PIPE TO INSURE SUFFICIENT MINIMUM THICKNESS OF SHAPED INVERT.
8. ALL PRECAST CONCRETE MANHOLE SECTIONS SHALL CONFORM TO THE LATEST REVISION OF ASTM C 478 AS MODIFIED BY THE SPECIFICATIONS.
9. CONCRETE FOR MANHOLE BASES SHALL BE CLASS I AS DESCRIBED IN THE SPECIFICATIONS.
10. PRECAST MANHOLES SHALL BE SET AT LEAST 4 INCHES INTO MANHOLE BASE.
11. MANHOLES WITH PIPE SIZES 24" AND LARGER SHALL HAVE 5" INSIDE DIAMETER (MIN.).
12. INSIDE DIAMETER OF "FIVE-FOOT DIAMETER PRECAST MANHOLES SHALL REMAIN CONSTANT TO THE LOCATION OF THE REDUCING FLAT TOP WHICH CONNECTS THE FOUR-FOOT DIAMETER CONE SECTION TO THE FIVE-FOOT DIAMETER MANHOLE BARREL.
13. ALL INTERIOR CONCRETE SURFACES ABOVE THE BENCH OF PRECAST MANHOLES SHALL BE COATED WITH 2 COATS OF TNEMEC SERIES 66 HI-BUILD EPOXOLINE, DRY THICKNESS OF 8 MILS (MIN.).
14. EXTERIOR MANHOLE WALLS SHALL BE COATED WITH 1 COAT VALSPAR HI-BUILD BITUMINUS COATING 35-J-10, OR TNEMEC 46-450 HEAVY TNEMECOL, OR APPROVED EQUAL.

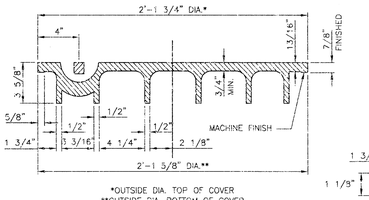

*OUTSIDE DIA. TOP OF COVER
**OUTSIDE DIA. BOTTOM OF COVER

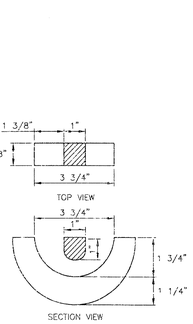

PICK HOLE DETAIL

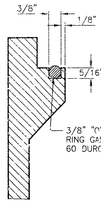

FRAME GROOVING DETAIL
(FOR SELF-SEALING MHS ONLY)

MANHOLE FRAME AND COVER

(TOTAL WEIGHT = 430 LBS.)

MANHOLE FRAME AND COVER NOTES

1. CAST IRON MANHOLE FRAME AND COVER SHALL CONFORM TO ASTM A-48, CLASS 30, OR BETTER.
2. THE FRAMES AND COVERS SHALL BE OF A NONROCKING TYPE OR WITH MACHINED BEARING SURFACES SO FITTING PARTS WILL NOT RATTLE OR ROCK UNDER TRAFFIC.
3. MANHOLE CASTINGS SHALL BE DEETER FOUNDRY INC. NO. 1261 OR APPROVED EQUAL, UNLESS OTHERWISE SPECIFIED IN THE SPECIAL CONDITIONS. (MINIMUM WT. 430 LBS.) ALL MANHOLE CASTINGS, REGARDLESS OF TYPE, SHALL BE CONSIDERED SUBSIDIARY TO THE UNIT PRICES BID FOR THE VARIOUS MANHOLE TYPES.
4. GRIND ALL BURRS SMOOTH, CLEAN THOROUGHLY, THEN APPLY SHOP COAT OF ASPHALT BASE PAINT.
5. THE MANUFACTURER SHALL SUBMIT SHOP DRAWINGS TO THE ENGINEER FOR APPROVAL PRIOR TO MANUFACTURE. THE ENGINEER SHALL RETAIN THE RIGHT TO REJECT CASTINGS NOT CONFORMING TO THE SPECIFICATIONS OR THE APPROVED SHOP DRAWINGS.
6. WHERE SELF-SEALING MANHOLE FRAMES ARE SPECIFIED ON THE PLANS, THE MANHOLE FRAME SHALL BE FURNISHED WITH AN APPROVED "O" RING GASKET GROOVED INTO THE BEARING SURFACE OF THE MANHOLE FRAME (PER DETAIL). THE "O" RING GASKET SHALL NOT BE INSTALLED IN THE MANHOLE FRAME UNTIL AFTER FINAL INSPECTION AND ACCEPTANCE OF THE PROJECT BY THE ENGINEER. THE CONTRACTOR SHALL SUPPLY TO THE OWNER ONE (1) REPLACEMENT "O" RING GASKET FOR EACH SELF-SEALING MANHOLE SPECIFIED.

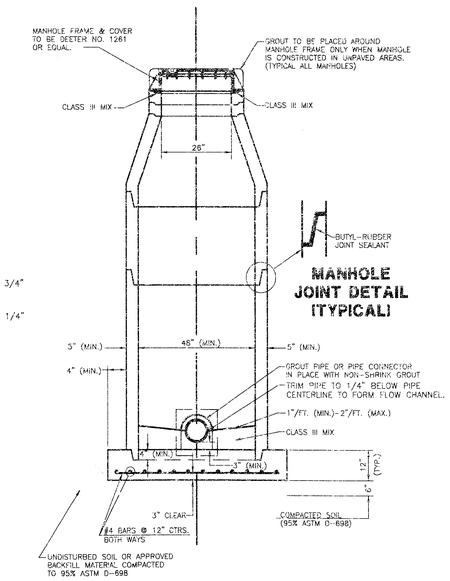

SECTION X (TYPICAL)

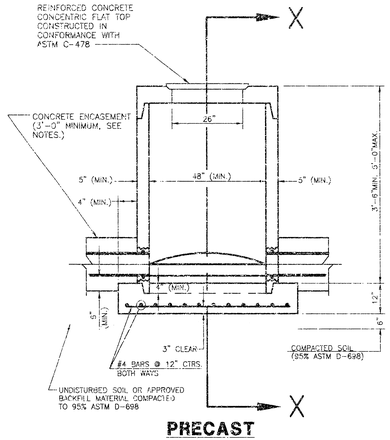

PRECAST SHALLOW MANHOLE TYPE "D"

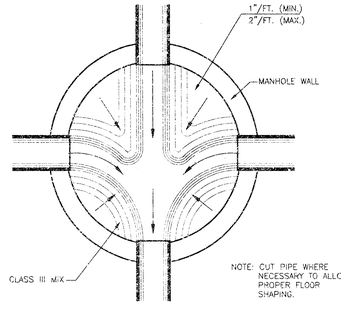

TYPICAL MANHOLE FLOOR SHAPING

MID-KANSAS ENGINEERING CONSULTANTS, INC.
411 N. WEBB ROAD
WICHITA, KS. 67206
316-684-9600

CLUBHOUSE VILLAS @ LEGACY PARK WILSON ESTATES ADDITION
PROJECT NAME

MANHOLE DETAILS
SHEET TITLE

MKEC	MKEC	MKEC
DESIGN BY:	DRAWN BY:	CHECKED BY:
AUGUST 2000	99187	5 / 9
DATE	JOB NO.	SHEET/OF

SILT FENCE MATERIAL SPECIFICATIONS

GRAB TENSILE STRENGTH	100 LBS. Min. (ASTM D4632)
MULLEN BURST STRENGTH	300 PSI MIN (ASTM D3786)
TRAPEZOID TEAR STRENGTH	60 LBS. MIN. (ASTM D4533)
WATER FLOW RATE	20 GAL/MIN/SQ.FT MIN. (ASTM D4491)
UV STABILITY	70% MIN. (ASTM D4355)

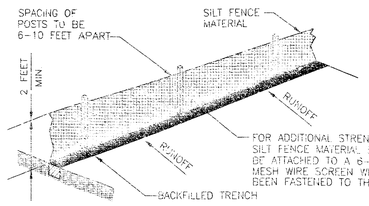

SILT FENCE INSTALLATION

SILT FENCES CAN MINIMIZE SEDIMENT FROM ENTERING STREAMS AND OTHER WATER BODIES. IN ADDITION, THEY SHOULD BE INSTALLED WHERE SEDIMENT FROM SHEET FLOW OR RILL AND GULLY EROSION WILL ENTER DIRECTLY ONTO ADJACENT LANDS.

WHEN USED TO CONTROL SEDIMENT FROM STEEP SLOPES, FILTER FENCES SHOULD BE PLACED AWAY FROM THE TOE OF A SLOPE FOR INCREASED HOLDING CAPACITY.

WHEN INSTALLING, IT IS IMPORTANT THE FABRIC MATERIAL BE ANCHORED INTO A TRENCH AND BACK FILLED.

ATTACHING TWO FILTER FENCES TOGETHER SHOULD BE COMPLETED IN A MANNER ILLUSTRATED IN DETAIL #1, BY WRAPPING THE MATERIAL AS ILLUSTRATED. A TIGHT FIT OF MATERIAL IS CREATED AND THE STRUCTURAL STABILITY OF THE FENCE MAINTAINED.

MAINTENANCE OF SILT FENCES REQUIRES THAT THE FABRIC MUST BE INSPECTED AND NEEDED REPAIRS IMPLEMENTED AFTER EVERY STORM EVENT. SEDIMENT DEPOSITS SHOULD BE REMOVED WHEN MATERIAL REACHES A DEPTH OF ONE-HALF THE FENCE HEIGHT.

ATTACHING TWO SILT FENCES

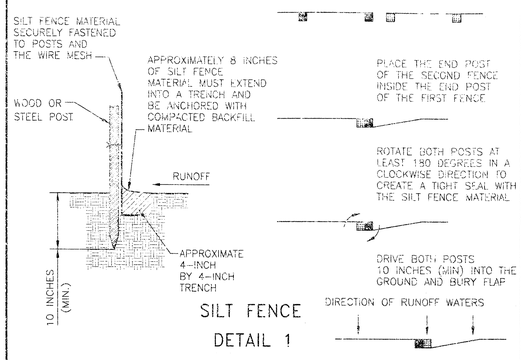

SILT FENCE
DETAIL 1

GRAVEL FILTERS FOR AREA INLETS

ALL STORM DRAINAGE SYSTEM INLETS SHOULD HAVE FILTERS INSTALLED TO TREAT RUNOFF BEFORE WATER IS DISCHARGED INTO A STREAM.

GRAVEL FILTERS CAN BE CONSTRUCTED WITH A COMBINATION OF CONCRETE BLOCKS, 1/2-INCH WIRE SCREEN AND COARSE (APPROX. 3/4-INCH DIAMETER) GRAVEL. AN ALTERNATIVE INSTALLATION CAN BE USE OF GRAVEL BAGS. USE OF GRAVEL SMALLER THAN 3/4-INCHES MAY RESULT IN CLOGGING OF PORES AND REDUCE THE AMOUNT OF WATER FLOWING INTO AN INLET.

GRAVEL FILTERS CAN BE USED IF THE IMMEDIATE AND ADJACENT AREA TO THE DRAIN CONSISTS OF SOIL OR PAVEMENT.

ALL GRAVEL FILTERS INSTALLED AROUND AREA DRAINS SHOULD BE INSPECTED AND REPAIRED AFTEN EACH RUNOFF EVENT. SEDIMENT SHOULD BE REMOVED WHEN MATERIAL IS WITHIN TWO INCHES OF THE TOP OF THE FILTER. PERIODICALLY, THE GRAVEL SHOULD BE RAKED TO INCREASE INFILTRATION AND FILTERING OF RUNOFF WATER.

SEDIMENT SHOULD BE REMOVED IMMEDIATELY FROM ANY TRAVELED WAY OF ROADS AND STREETS.

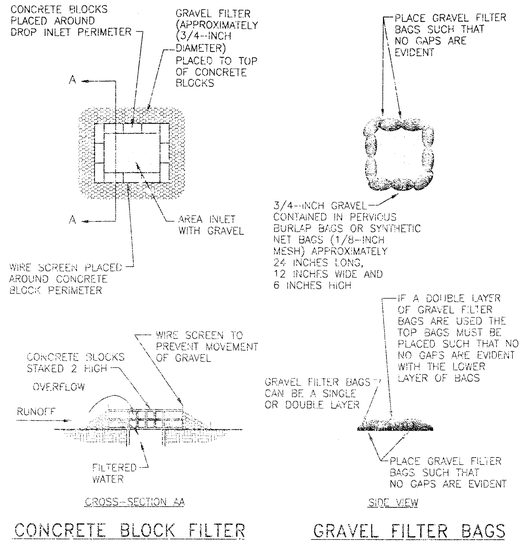

CONCRETE BLOCK FILTER

GRAVEL FILTER BAGS

NOTE: GRAVEL FILTERS MAY BE USED ON PAVEMENT OR BARE GROUND

GRAVEL FILTER FOR AREA INLET
DETAIL 3

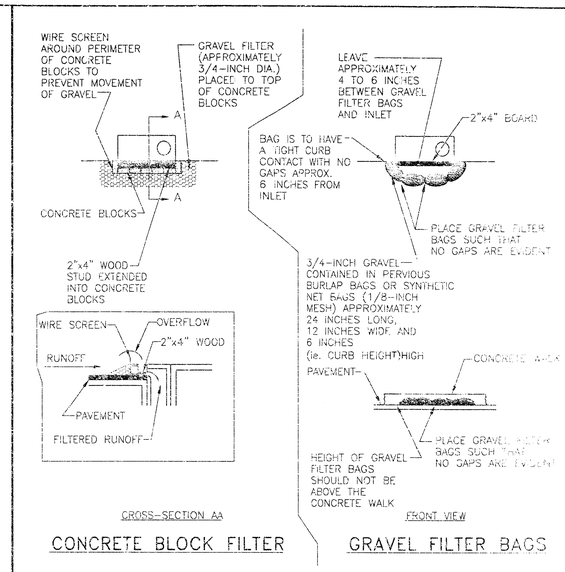

CONCRETE BLOCK FILTER

GRAVEL FILTER BAGS

NOTE: GRAVEL FILTERS MAY BE USED ON PAVEMENT OR BARE GROUND

CURB INLET GRAVEL FILTER
DETAIL 5

CURB INLET GRAVEL FILTERS

ALL STORM DRAINAGE SYSTEM INLETS SHOULD HAVE FILTERS INSTALLED TO TREAT RUNOFF BEFORE WATER IS DISCHARGED INTO A STREAM.

CURB INLET GRAVEL FILTERS CAN BE CONSTRUCTED WITH A COMBINATION OF CONCRETE BLOCKS, 1/2-INCH WIRE SCREEN, COARSE (APPROX. 3/4-INCH DIAMETER) GRAVEL AND A 2"x4" WOOD BOARD FOR SUPPORT. AN ALTERNATIVE INSTALLATION CAN USE GRAVEL BAGS (NOT IMPERVIOUS SAND BAGS). USE OF GRAVEL SMALLER THAN 3/4 INCHES MAY RESULT IN CLOGGING OF PORES AND REDUCE THE AMOUNT OF WATER FLOWING INTO AN INLET.

GRAVEL FILTERS CAN BE USED IF THE IMMEDIATE AND ADJACENT AREA TO THE DRAIN CONSIS'S OF SOIL OR PAVEMENT.

ALL CURB INLET GRAVEL FILTERS SHOULD BE INSPECTED AND REPAIRED AFTER EACH RUNOFF EVENT. SEDIMENT SHOULD BE REMOVED WHEN MATERIAL IS WITHIN TWO INCHES OF THE TOP OF THE FILTER. PERIODICALLY, THE GRAVEL SHOULD BE RAKED TO INCREASE INFILTRATION AND FILTERING OF RUNOFF WATERS.

SEDIMENT SHOULD BE REMOVED IMMEDIATELY FROM ANY TRAVELLED WAY OF ROADS AND STREETS.

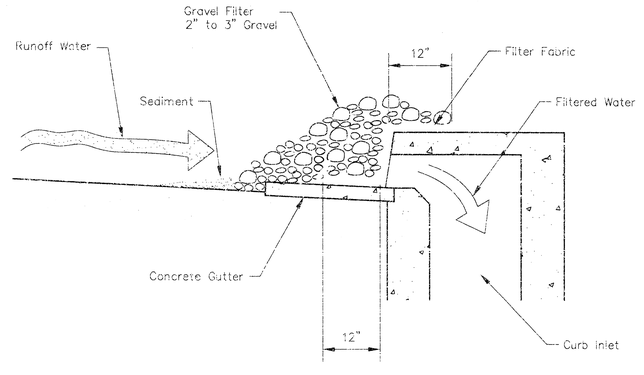

ALTERNATIVE CURB INLET GRAVEL FILTER
DETAIL 6

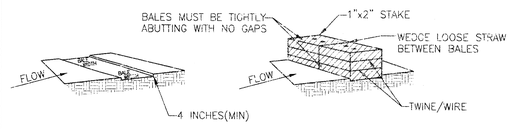

CROSS-SECTION OF A PROPERLY INSTALLED STRAW BALE

STRAW BALE DIKES FOR DRAINAGE CHANNELS
DETAIL 2

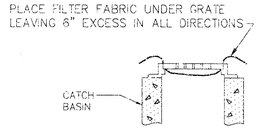

ALTERNATIVE FILTER
FOR AREA INLET
DETAIL 4

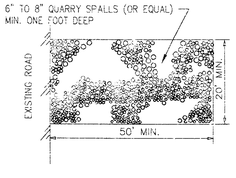

TEMPORARY CONSTRUCTION
ENTRANCE/WASH DOWN PAD
DETAIL 7

CLUBHOUSE VILLAS
PROJECT NAME
EROSION CONTROL DETAILS
DESIGN TITLE

JTC	DAC
DESIGN	DRAWN BY:
GJA	AUGUST 2000
CHECKED BY:	DATE
99187	6 / 9
JOB NO.	SHEET/OF

M.K.E.C.
411 N. WEBB ROAD
WICHITA, KS. 67206
316-684-9600

Dec 21, 14 21:31 2000

CLUBHOUSE VILLAS
STORM WATER SEWER PLANS
LINES 1 & 2

STA. 0+00, LINE 1=
BL CL STA. 4+21.96, 194.7' LT.
BEGIN CONSTRUCTION
W/24" END SECTION
FL OUT=194.53
(CONTRACTOR TO GRADE FROM END SECTION TO SWELL TO PROVIDE DRAINAGE. COST SUBSIDIARY TO SITE CLEARING AND RESTORATION.)

12 SY LIGHT RIP RAP W/ GROUTED TOE WALL

STA. 1+96.34, LINE 1=
STA. 0+00, LINE 2=
BL CL STA. 4+05.61
CONST. STD. 5' DIA. TYPE "A" MANHOLE
TOP=198.39

STA. 2+76.80, LINE 1=
BL CL STA. 3+25.79, 16.67' LT.
CONST. STD. TYPE 1A INLET
W=4'-4", L=6'-4"
INSTALL SEDIMENT BARRIER
(SEE DETAIL SHEET 6)
TOP=198.55

STA. 3+10.13, LINE 1=
BL CL STA. 3+25.79, 16.67' RT.
CONST. STD. TYPE 1A INLET
W=4'-4", L=6'-4"
INSTALL SEDIMENT BARRIER
(SEE DETAIL SHEET 6)
TOP=198.55

STA. 0+96.43, LINE 2=
BL CL STA. 4+71.04, 16.67' LT.
CONST. STD. TYPE 1A INLET
W=4'-4", L=6'-4"
INSTALL SEDIMENT BARRIER
(SEE DETAIL SHEET 6)
TOP=198.55

STA. 0+00, LINE 2=
STA. 1+96.34, LINE 1=
BL CL STA. 4+05.61
5' DIA. TYPE "A" MANHOLE
(LINE 1)

STA. 0+83.10, LINE 2=
BL CL STA. 4+71.04, 16.67' RT.
CONST. STD. TYPE 1A INLET
W=4'-4", L=6'-4"
INSTALL SEDIMENT BARRIER
(SEE DETAIL SHEET 6)
TOP=198.55

BLDG. 17 BLDG. 15 BLDG. 18 BLDG. 19

LINE 1 24" RCP LINE 2 15" RCP PRIVATE DRIVE 35' SETBACK 20' D.E. ESMT. DITCH & BERM WORK GRADING BY OTHERS 96°44'23" 106°52'58" 4+00 5+00 78' 7'-6" F-F 19' RCP 20' F-F 27.74' 98.55'

SCALE: 1"=20'

PLAN LINE 1

SCALE: 1"=20'

PLAN LINE 2

SCALE: 1"=20'

PROFILE LINE 1

SCALE: 1"=20' HORZ.
1"=5' VERT

PROFILE LINE 2

SCALE: 1"=20' HORZ.
1"=5' VERT

STA. 0+00, LINE 1=
BL CL STA. 4+21.96
CONST. 24" END SECTION
FL OUT=194.53

WATER CROSSING

STA. 1+96.34, LINE 1=
STA. 0+00, LINE 1A=
BL CL STA. 4+05.61
CONST. STD. 5' TYPE "A" MANHOLE
TOP=198.39

SAN. SEWER SERVICE

STA. 2+76.80, LINE 1=
BL CL STA. 3+25.79, 16.67' LT.
CONST. STD. TYPE 1A INLET
TOP=198.55
CL PRIVATE DRIVE

STA. 3+10.13, LINE 1=
BL CL STA. 3+25.79
CONST. STD. TYPE 1A INLET
TOP=198.55

STA. 0+00, LINE 2=
STA. 1+96.34, LINE 1=
BL CL STA. 4+05.61
STD. 5' TYPE "A" MANHOLE
(LINE 1)

SAN. SEWER SERVICE

STA. 0+83.1, LINE 2=
BL CL STA. 4+71.04
CONST. STD. TYPE 1A INLET
TOP=198.55
CL PRIVATE DRIVE

STA. 0+96.43, LINE 2=
BL CL STA. 4+71.04, 16.67' LT.
CONST. STD. TYPE 1A INLET
TOP=198.55

EXIST. GROUND
PROP. GROUND

205 200 195 190

ditch grading per architectural plans (lot 6, blk. 1)
196.34 L.F. OF 24" RCP @ 0.21%
80.46 L.F. OF 15" RCP @ 0.40%
33.33 L.F. OF 15" RCP @ 0.39%
63.1 L.F. OF 15" RCP @ 0.40%
33.33 L.F. OF 15" RCP @ 0.39%

FL OUT=194.53
FL=194.74
FL OUT=194.94
FL IN=135.04(15"NE)
FL IN=194.04(15"SW)
FL OUT=195.36
FL IN=196.46
FL=195.55
FL OUT=195.59
FL OUT=194.94(24"W)
FL IN=196.04(15"NE)
FL IN=196.04(15"SW)
FL OUT=195.29(15"SW)
FL IN=196.39(15"NE)
FL OUT=195.52(15"SE)

0 1 2 3 0 1

9918701

Sep 25, 14 to 06 2000

LEGACY PARK WILSON ESTATES ADDITION

TO WICHITA, SEDGWICK COUNTY, KANSAS

SCALE: 1" = 100'

● = IRON SET UNLESS OTHERWISE NOTED

N.E. Corner Sec. 8, T27S, R2E of the 6th P.M. 1/2" I.P. in thimble

Complete Access Control 250'

Access Control except One Opening 100'

Access Control except One Opening 299.46'

Access Control except One Opening 60'

Access Control except One Opening 453.90'

Complete Access Control 200'

Access Control except Two Openings 1126.40'

S.E. Corner, NE 1/4, Sec. 8, T27S, R2E

℄ WEBB ROAD = ℄

Street Dedication

Street Dedication

℄ 65' Williams Gas Pipeline Easement Film 1603, Page 709

20' Utility Easement Film 2079, Page 1319

Ingress/Egress Esm't. Film 1594, Page 971

Ingress/Egress Esm't. Film 1591, Part 691

20' Utility Easement

Drainage Easement

RES. "A"

Access Control except One Opening

Complete Access Control

Waterline Easement

℄ 20' Util. Esm't.

℄ 21ST STREET NORTH = ℄

Complete Access Control 370'

Access Control except One Opening 110'

RESERVE "D"

RESERVE "B"

WILSON ESTATES PARKWAY

RESERVE "C"

10' Utility Easement

℄ 20' Drainage Easement

15' Utility Easement

20' Utility Easement

20' Util. Esm't.

20' Drain. Esm't.

100' KGE Easement Book 5512, Page 395

30' Drainage Esm't.

N.E. Corner Lot 1, Block 1, Wilson Retirement Addition

S.E. Corner Lot 1, Block 1, Wilson Retirement Addition

S.W. Corner Wilson Retirement Addition

S.W. Corner Wilson Retirement 2nd Addition

S.E. Corner Lot 25, Block 7, Wilson Farms Addition

S.W. Corner, Wilson Apartments Addition

N.E. Corner Reserve "C" Wilson Farms Addition

S.E. Corner Wilson Farms Addition Point of Beginning

1 ① 2 ② 3 4 5 6

No.	Revision	By	Date

CITY OF WICHITA, KANSAS

WICHITA - DESAK, P.E. - CITY ENGINEER

LEGACY PARK WILSON ESTATES ADDITION

PLAT

CITY OF WICHITA PROJECT NO. 448-76-215-89469-000-000-001

Professional Engineering Consultants, P.A.

303 S. TOPEKA - WICHITA, KANSAS 67202

316-262-2691 • FAX 316-262-3003

Designed by	BER	Job No.	34-00034-003
Drawn by	DEP	Date	March 2000

Sht. 8 of 8

D:\NR: BER OPER: JAM SCALE: 1=100.00
Q:\2000\00034\003\LPWETPLAT 04-18-2000 02:19:25 pm