STORM WATER SEWER IMPROVEMENTS
FOR
GALICHIA MEDICAL GROUP
2600 N. WOODLAWN
LOT 1, BLOCK 1, HINKLE'S ADDITION,
WICHITA, SEDGWICK COUNTY, KANSAS

CITY OF WICHITA PRIVATE PROJECT NO.: 1067 PPS(607861)

MIKE LINDEBAK, P.E., CITY ENGINEER DECEMBER 2000

INDEX OF SHEETS

1. Title Sheet
2. Site Plan
3. SWS Plan/Profile Sheet
4. MH Details
5. Curb Inlet Details

GENERAL NOTES:

1. ALL ELEVATIONS SHOWN ARE BASED ON CITY OF WICHITA DATUM(MEAN SEA LEVEL ELEV.=1187.4=CITY DATUM).

2. CONTRACTOR WILL BE REQUIRED TO PROVIDE A MINIMUM ADVANCE NOTICE OF FORTY-EIGHT(48)HOURS TO UTILITY COMPANIES PRIOR TO STARTING ANY EXCAVATION AS FOLLOWS:

KANSAC ONE CALL	687-2470

THE CONTRACTOR MUST NOTIFY THE FOLLOWING IN CASE OF AN EMERGENCY:

CABLEVISION	262-4270 OR 283-2081
KG&E-GAS	263-7511
KG&E-ELECTRIC	264-1141
PEOPLES NATURAL GAS	942-8811
SOUTHWESTERN BELL TELEPHONE	1-571-2511
CITY OF WICHITA WATER DEPARTMENT	268-4908

THE CONTRACTOR SHALL NOTIFY PIPELINE COMPANIES AT LEART 24 HOURS IN ADVANCE OF ANY WORK BEING PERFORMED ACROSS AND/OR ADJACENT TO PIPELINES.

3. THE CONTRACTOR SHALL NOT START WORK ON THE PROJECT UNTIL THE PROJECT INSPECTOR IS ASSIGNED TO THE PROJECT AND IS PRESENT ON THE SITE. ANY WORK DONE WITHOUT INSPECTION WILL BE REQUIRED TO BE UNCOVERED FOR INSPECTION.

4. THE CONTRACTOR SHALL GIVE ALL PROPERTY OWNERS/OR TENANTS OF DEVELOPED PROPERTY DIRECTLY ABUTTING THE CONSTRUCTION OF THIS PROJECT A MINIMUM OF TEN(10)DAYS ADVANCE NOTICE PRIOR TO START OF CONSTRUCTION.

5. THE CONTRACTOR SHALL BE RESPONSIBLE FOR PRESERVING PROPERTY IRONS. THE CONTRACTOR WILL BE REQUIRED TO RE-ESTABLISH ANY PROPERTY IRONS WHICH ARE DAMAGED OR DESTROYED BY HIS CONSTRUCTION OPERATIONS. SUCH IRONS SHALL BE RE-ESTABLISHED BY A LICENSED LAND SURVEYOR IN ACCORDANCE WITH STATE LAWS.

6. THE CONTRACTOR SHALL RESTORE ALL DITCHES, SWALES, ROAD SHOULDERS, ENTRANCES AND BANK LINES TO THEIR ORIGINAL SLOPES AND GRADES EXCEPT AS SHOWN OTHERWISE.

7. A SAW CUT OF AT LEAST ONE-HALF THE DEPTH OF EXISTING SURFACE COURSES OR ONE-FOURTH THE DEPTH OF THE EXISTING TOTAL PAVEMENT THICKNESS SHALL BE PROVIDED AT LOCATIONS WHERE PROPOSED CONSTRUCTION ABUTS AN EXISTING SURFACE COURSE OR PAVEMENT FOR WHICH PARTIAL REMOVAL OF THAT SURFACE OR PAVEMENT IS REQUIRED, EXCEPT WHEN SUCH SAW CUTS ARE WITHIN THREE(3)FEET OF AN EXISTING JOINT. THE LIMITS OR REMOVAL SHALL BE EXTENDED TO THE EXISTING JOINT. REMOVAL AND REPLACEMENT OF EXISTING PAVEMENT SHALL CONFORM TO THE APPLICABLE SECTIONS OF THE CITY OF WICHITA STANDARD SPECIFICATIONS.

8. PAVEMENT REMOVAL AND/OR REPLACEMENT WILL BE MEASURED AND PAID FOR ON THE LINEAL FOOT BASIS AS MEASURED ALONG THE CENTERLINE OF THE WATER LINE REGARDLESS OF WIDTH, PAVEMENT TYPE AND/OR PAVEMENT THICKNESS. MINIMUM LIMITS OF SUCH PAVEMENT REMOVAL AND REPLACEMENT SHALL BE ONE FOOT BEYOND THE LIMITS OF THE EXCAVATION MADE FOR THE WATER LINE OR THE STRUCTURE, EXCEPT WHEN SUCH SAW CUTS ARE WITHIN THREE(3) FEET OF AN EXISTING JOINT, THE LIMITS OF REMOVAL SHALL BE EXTENDED TO THE EXISTING JOINT. REMOVAL AND REPLACEMENT OF EXISTING PAVEMENT SHALL BE CONFORM TO THE APPLICABLE SECTIONS OF THE CITY OF WICHITA STANDARD SPECIFICATIONS.

9. INTERURBAN TRAFFIC GENERATED OUTSIDE THE PROJECT AREA SHALL NOT BE CARRIED THROUGH CONSTRUCTION. LOCAL RESIDENTIAL TRAFFIC GENERATED WITHIN THE PROJECT AREA SHALL BE CARRIED THROUGH CONSTRUCTION AS FURTHER PROMULGATED BY PROJECT SPECIAL PROVISIONS.

10. UNDERGROUND UTILITY SERVICE LINES AND OVERHEAD UTILITY POLE LINES ARE TO BE ADJUSTED AS NECESSARY BY OTHERS PRIOR TO CONSTRUCTION UNLESS THE PLANS SPECIFICALLY CALL FOR THEIR ADJUSTMENT BY THE CONTRACTOR OR UNLESS THE PLANS SPECIFICALLY IDENTIFY A UTILITY TO BE ADJUSTED BY ITS OWNER DURING CONSTRUCTION. EXISTING UTILITIES AND THEIR LOCATION, AS SHOWN ON THE PLANS, REPRESENT THE BEST INFORMATION OBTAINABLE FOR DESIGN. LOCATION INFORMATION HAS BEEN OBTAINED FROM VARIOUS UTILITY COMPANIES AND IS EITHER FROM COMPANY RECORD DRAWINGS OR COMPANY PROVIDED FIELD LOCATIONS. THE CONTRACTOR WILL BE REQUIRED TO WORK AROUND EXISTING UTILITIES WITHIN THE RIGHT-OF-WAY WHICH DO NOT CONFLICT WITH PROPOSED CONSTRUCTION.

11. RUBBLE FROM THE REMOVAL OF MISCELLANEOUS STRUCTURES AND EXCESS EXCAVATION WHICH IS TO BE WASTED SHALL BE DISPOSED OF ON SITES TO BE PROVIDED BY THE CONTRACTOR. THESE SITES SHALL BE APPROVED BY THE ENGINEER AS TO SUITABILITY, APPEARANCE AND SITE LOCATION. LOCATIONS, THAT IN THE OPINION OF THE ENGINEER, WILL LEAVE AN UNSIGHTLY APPEARANCE WILL NOT BE APPROVED.

ALL DISPOSAL SITES MUST BE APPROVED BY THE KANSAS DEPARTMENT OF HEALTH AND ENVIRONMENT. MATERIAL EITHER STOCKPILED OR DISPOSED OF IN A FLOODPLAIN WOULD REQUIRE A KANSAS STATE BOARD OF AGRICULTURE PERMIT. ANY MATERIAL DUMPED IN WATERS OF THE UNITED STAES OR WETLANDS IS SUBJECT TO U.S. CORPS OF ENGINEERS PERMITTING REGULATIONS. ANY MATERIAL BURIED OR STOCKPILE BEYOND APPROVED CONSTRUCTION LIMITS WOULD REQUIRE ADDITIONAL ARCHAEOLOGICAL INVESTIGATIONS UNLESS BURIED IN A PREVIOUSLY APPROVED BORROW LOCATION.

12. PROPERTIES WITHIN THE PROJECT LIMITS MAY HAVE UNDERGROUND SPRINKLER SYSTEMS IN THE PUBLIC RIGHT-OF-WAY WHICH CONFLICT WITH NEW CONSTRUCTION. CONTRACTOR WILL BE REQUIRED TO REMOVE SUCH IMPROVEMENTS SHOULD THEY NOT BE REMOVED BY THEIR OWNER AT THE TIME OF CONSTRUCTION OF THE PROJECT. THE CONTRACTOR WILL BE REQUIRED TO SALVAGE ALL SPRINKLER HEADS AND/OR VALVES AND GIVE SUCH MATERIAL TO THEIR OWNER. PORTIONS OF UNDERGROUND SPRINKLER SYSTEMS NOT IN CONFLICT WITH NEW CONSTRUCTION SHALL BE PROTECTED FROM DAMAGE AND SHALL REMAIN IN PLACE. ALL WORK IN CONNECTION WITH UNDERGOUND SPRINKLER SYSTEMS SHALL BE CONSIDERED AS SUBSIDIARY TO THE CONTRACT PAY ITEMS OF WORK.

13. THE CONTRACTOR MUST EXAMINE THE CONSTRUCTION SITE PRIOR TO BIDDING AND BE SATISFIED AS TO THE WORK SHOWN FOR COMPLETION. AFTER BIDS HAVE BEEN RECEIVED, THE CONTRACTOR SHALL NOT ASSERT THAT THERE WAS A MISUNDERSTANDING OF THE QUANTITIES OF WORK OR OF THE NATURE FOR THE WORK TO BE COMPLETED.

PROJECT LOCATION

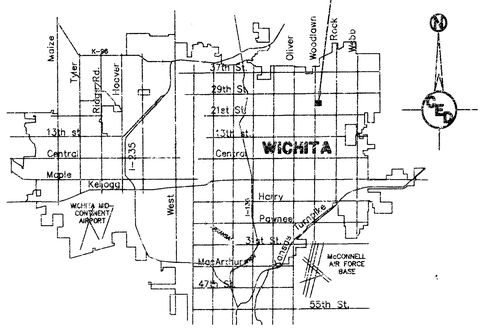

LOCATION MAP

PROJECT LOCATED IN
NW 1/4, SEC. 6, T27S, R2E

BENCHMARK
Existing Curb Inlet, center of lid.
Elev = 188.40 (City of Wichita Datum)
(See Site Plan for Location)

Booked 9-24-01 MAS D-513

AS-BUILT
Date 3/2/01
Signed Walter D Pavy

APPROVED AS NOTED
By CITY ENGINEER OF WICHITA

Sanitary Sewers _____
Storm Sewers VRH 12/14/00
Driveway Approaches _____
Water Mains _____
Paving _____

NOTE TO CONTRACTOR

INSPECTION AND TESTING FOR THIS PROJECT IS TO BE PROVIDED BY A LICENSED CONSULTING ENGINEERING FIRM UNDER CONTRACT WITH THE OWNER/DEVELOPER. SAID INSPECTION TO BE IN ACCORDANCE WITH THE CITY OF WICHITA STANDARD CONSTRUCTION ENGINEERING PRACTICES AND CERTIFIED BY A LICENSED PROFESSIONAL ENGINEER. NO WORK SHALL BE PERFORMED IN DEDICATED EASEMENTS OR THE PUBLIC RIGHT-OF-WAY BY THE CONTRACTOR WITHOUT SUCH INSPECTION NOR SHALL ANY WORK BE COMMENCED IN DEDICATED EASEMENTS OR PUBLIC RIGHT-OF-WAY WITHOUT WRITTEN AUTHORIZATION BY THE CITY ENGINEER.

KARLAN DALE FINNEGAN LICENSED 10891 KANSAS PROFESSIONAL ENGINEER
12-14-2000

CED PROJ. NO.: 2000640
CERTIFIED ENGINEERING DESIGN
810 WEST DOUGLAS, SUITE C
WICHITA, KANSAS 67203
PH: (316) 262-8808
FAX: (316) 262-1669

SHEET 1
TOTAL 5

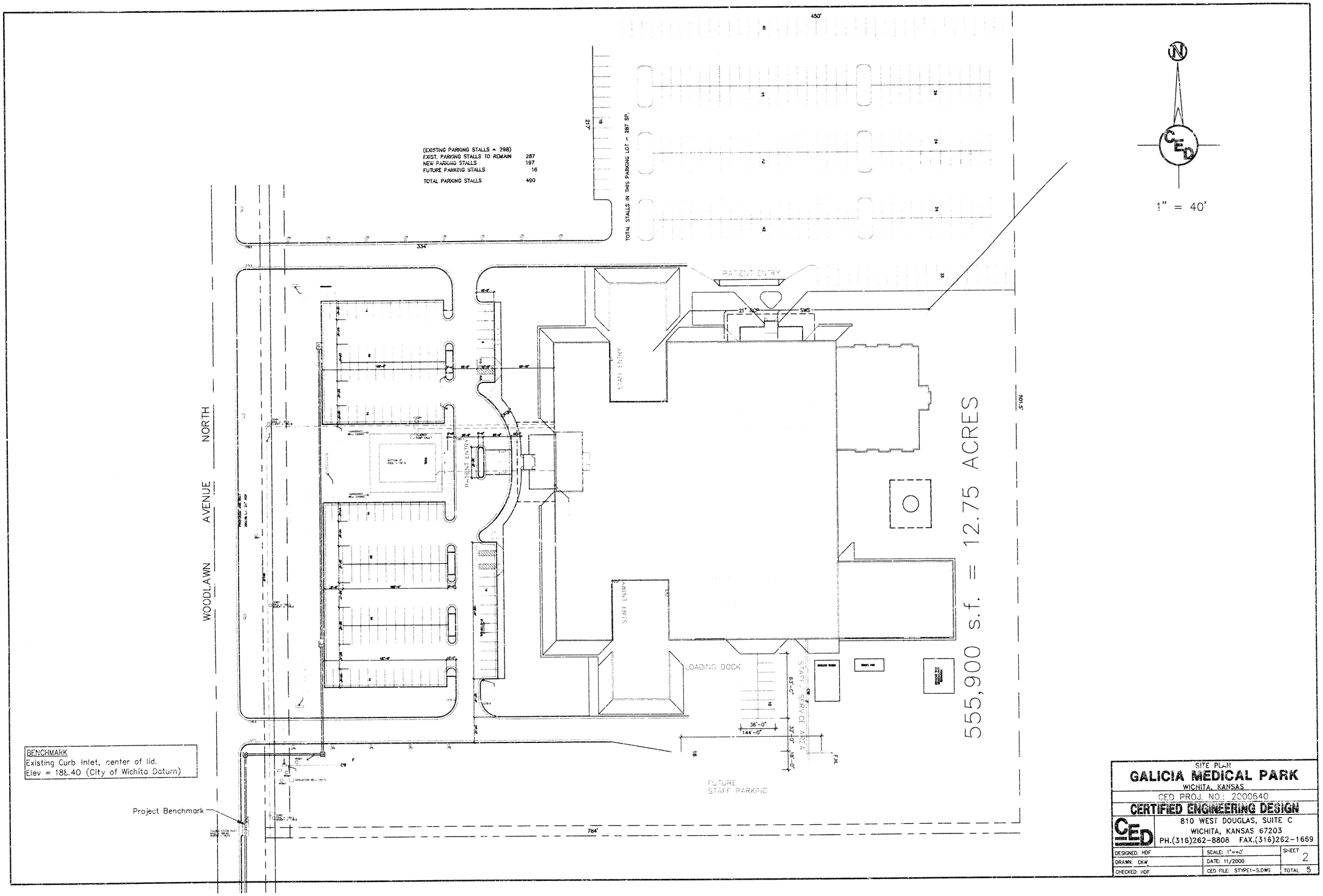

SITE PLAN

GALICIA MEDICAL PARK

WICHITA, KANSAS

CED PROJ. NO.: 2000640

CERTIFIED ENGINEERING DESIGN
810 WEST DOUGLAS, SUITE C
WICHITA, KANSAS 67203
PH.(316)262-8808 FAX.(316)252-1669

DESIGNED: HDF	SCALE: 1"=40'	SHEET 2
DRAWN: CKW	DATE: 11/2000	
CHECKED: HDF	CED FILE: STYPE1-S.DWG	TOTAL 5

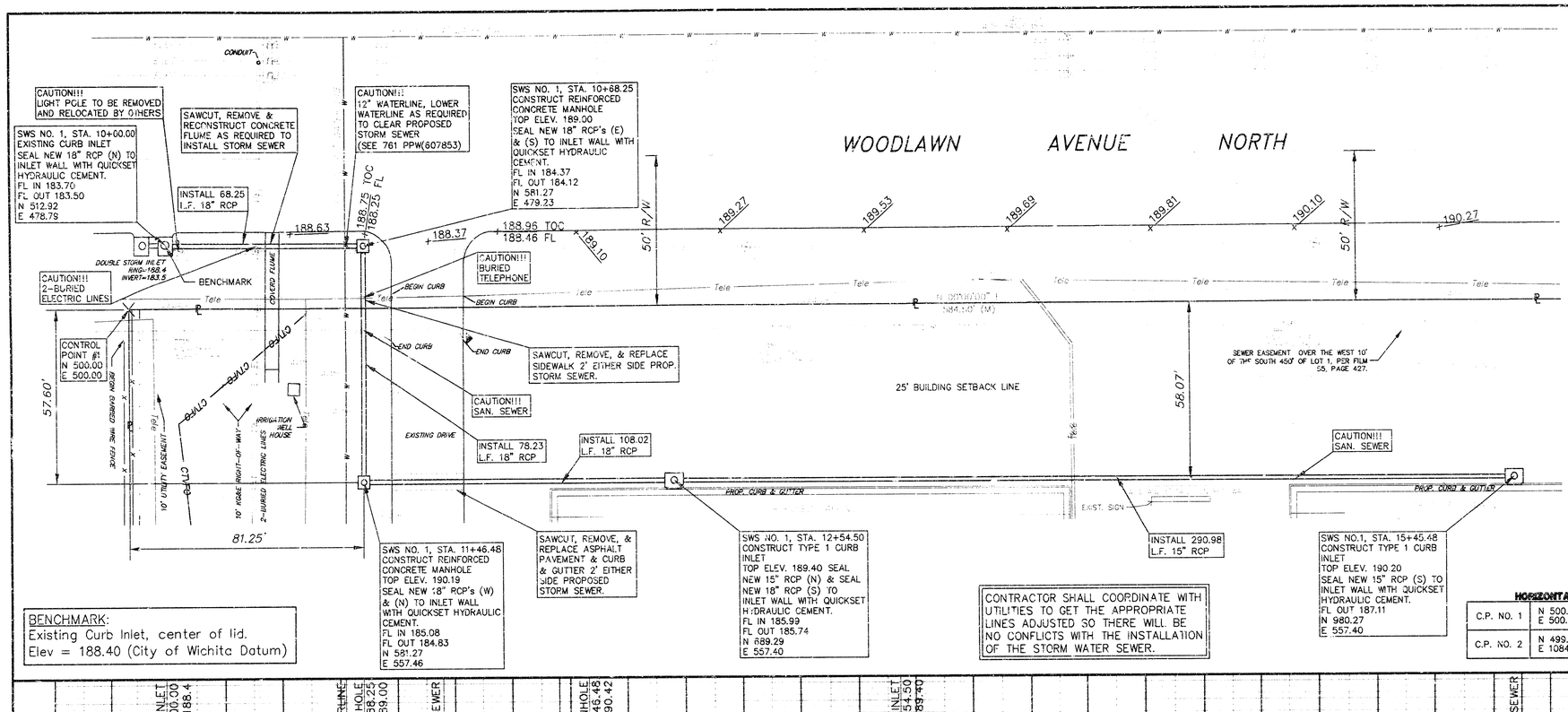

BENCHMARK:
Existing Curb Inlet, center of lid.
Elev = 188.40 (City of Wichita Datum)

CONTRACTOR SHALL COORDINATE WITH UTILITIES TO GET THE APPROPRIATE LINES ADJUSTED SO THERE WILL BE NO CONFLICTS WITH THE INSTALLATION OF THE STORM WATER SEWER.

HORIZONTAL CONTROL POINTS

C.P. NO. 1	N 500.00 E 500.00	CHISELED "X" FOUND SW COR. LOT 1
C.P. NO. 2	N 499.03 E 1084.50	CHISELED "X" FOUND NW COR. LOT 1

1" = 20'

- = 5/8"ø "L.S. #950" (FOUND)
- X = CHISELED "X" (FOUND)
- = YARD FLOOD LAMP
- = LIGHT POLE
- = DECORATIVE LAMP POST
- = CONIFEROUS TREE
- = DECIDUOUS TREE
- = STORM SEWER MAN HOLE
- = WATER VAULT MAN HOLE
- = SANITARY SEWER MAN HOLE
- = KANSAS GAS & ELECTRIC MAN HOLE
- = BELL TELEPHONE MAN HOLE
- = FIBER OPTIC MARKER
- = SIGN
- = FLAG POLE
- = CENTERLINE
- ℄ = PROPERTY LINE
- = UNDERGROUND ELECTRIC LINE
- DP = DRAINAGE PIPE (STORM SEWER)
- CTVFO = CABLE TELEVISION FIBER OPTIC LINE
- GAS = GAS LINE
- Tele = UNDERGROUND TELEPHONE LINE
- = WATER LINE
- = SANITARY SEWER

UTILITIES SHOWN REPRESENT THE BEST INFORMATION AVAILABLE FOR DESIGN. ADDITIONAL UTILITIES MAY BE PRESENT ON THIS PROJECT. THE CONTRACTOR SHALL BE RESPONSIBLE FOR DETERMINING THE EXACT LOCATION, DEPTH AND SIZE OF ALL UNDERGROUND UTILITIES PRIOR TO CONSTRUCTION. THE CONTRACTOR SHALL BE LIABLE FOR ANY DAMAGE CAUSED BY THE FAILURE TO DO SO.

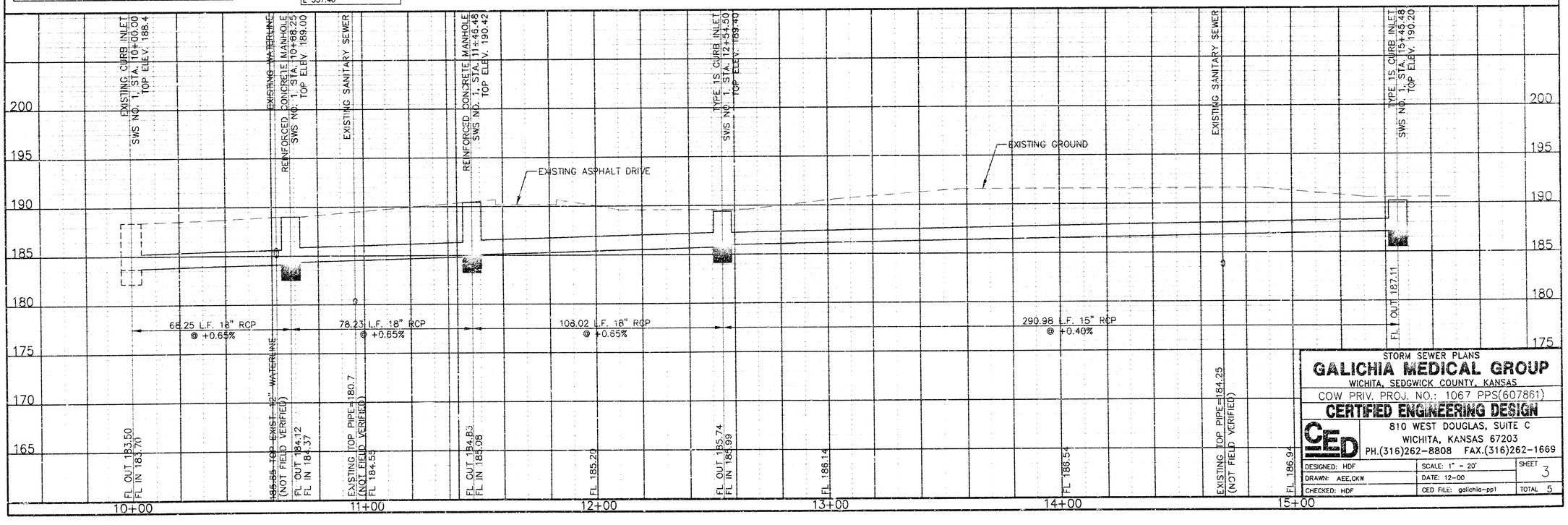

STORM SEWER PLANS
GALICHIA MEDICAL GROUP
WICHITA, SEDGWICK COUNTY, KANSAS
COW PRIV. PROJ. NO.: 1067 PPS(607861)

CERTIFIED ENGINEERING DESIGN
810 WEST DOUGLAS, SUITE C
WICHITA, KANSAS 67203
PH.(316)262-8808 FAX.(316)262-1669

DESIGNED: HDF	SCALE: 1" = 20'	SHEET 3
DRAWN: AEE,CKW	DATE: 12-00	
CHECKED: HDF	CED FILE: galichia-pp1	TOTAL 5

FHWA REGION NO.	STATE	PROJECT NO.	YEAR	SHEET NO.	TOTAL SHEETS
7	KANSAS	COW PRIV. PROJ. NO.:1067PPS(607861)	2000	4	5

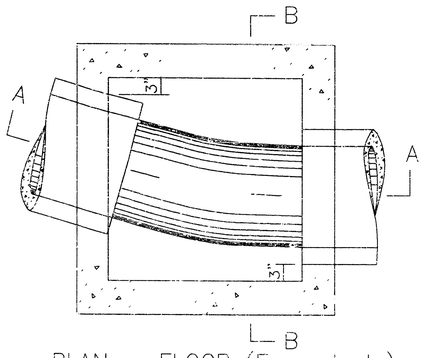

PLAN – FLOOR (Example I)

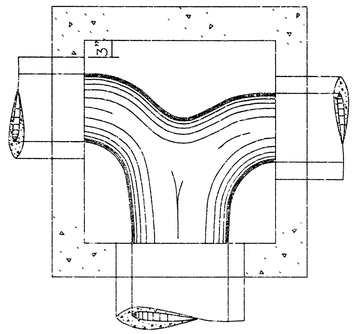

PLAN – FLOOR (Example III)

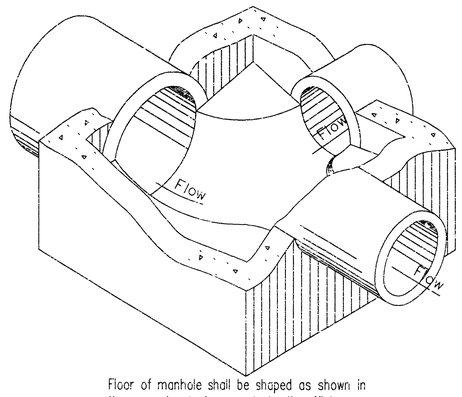

Floor of manhole shall be shaped as shown in the examples to increase hydraulic efficiency.

ISOMETRIC VIEW (Example IV)

Note: Use Class A Concrete throughout. All exposed edges shall be finished with an edging tool.

At the contractors option Class A Concrete (AE) or mix used in concrete pavement may be used throughout.

In general, pipes will enter and leave manhole at various positions. Where possible bend bars around pipes.

Floor of manhole shall be shaped as shown in various "EXAMPLES" with unreinforced Class "A" Concrete. Manhole opening and steps, where used, shall be placed to afford easy access to top of shaped invert. Top reinforcing bars shall be adjusted accordingly.

All castings shall be gray iron and shall comply with the KDOT Standard Specifications.

No deductions in concrete quantities shall be made for pipe openings or additions to concrete quantities shall be made for shaping floor of manholes.

The top of the manhole shall be sloped slightly to approximately fit the ground line or other condition as directed by the Engineer.

Dimensions and weights of cast iron as shown on this sheet are minimum. Larger dimensions and/or heavier weights of cast iron may be used.

The Contractor has the option of using precast manholes, as approved by the Engineer.

Steps shall be installed in all manholes when specified in the plans or when "H" is equal to or greater than six feet. Steps shall comply with the requirements of the KDOT Standard Specification.

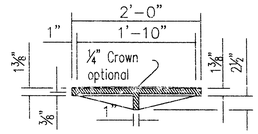

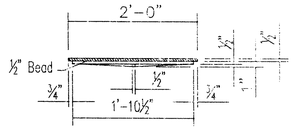

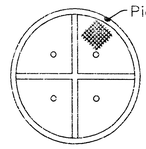

NOTE: All manhole castings are cast iron. Weight of castings includes no allow- ance for fillets and overruns.

MANHOLE COVER TYPE A & B
(Weight=134 lbs.; without ?" Crown= 125 lbs.)

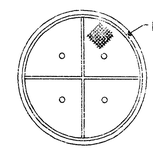

MANHOLE COVER TYPE C
(Weight= 64 lbs.)

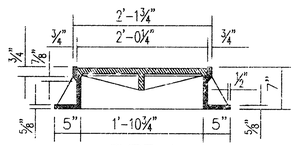

TYPE A

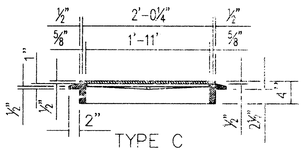

TYPE C

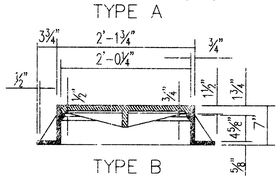

TYPE B

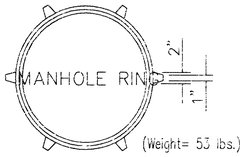

(Weight= 53 lbs.)

LIGHT TYPE
MANHOLE COVER & RING
Rings with four equally spaced lugs will be permitted.

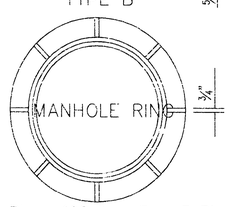

(Type A Ring= 192 lbs., Type B Ring= 198 lbs.)

HEAVY TYPE
MANHOLE COVER AND RING
Note: Either Type A or Type B may be used.

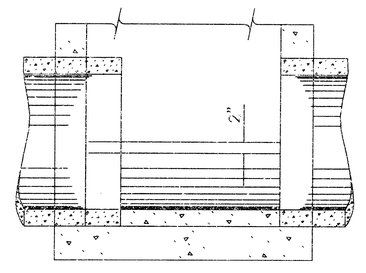

SECTION A–A (Example I)

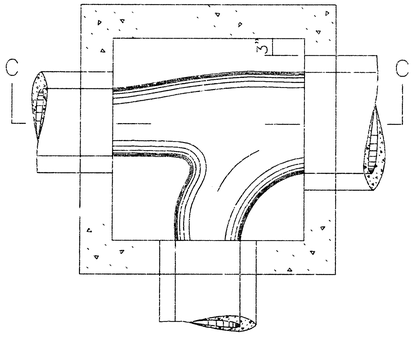

PLAN – FLOOR (Example IV)

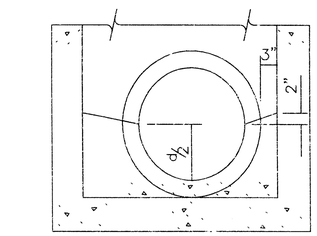

SECTION B–B (Example I)

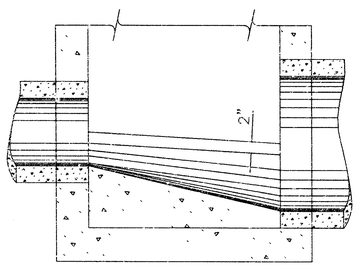

SECTION C–C (Example IV)

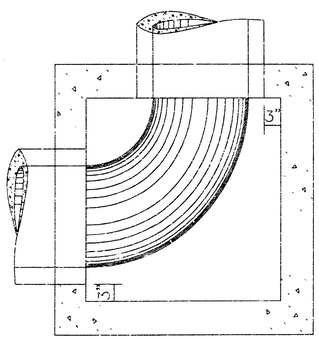

PLAN – FLOOR (Example II)

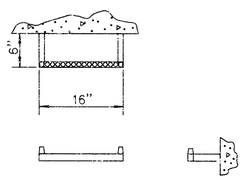

STEP DETAILS

ø Steps shall be uniformly spaced. Spacing shall be 12" minimum and 16½" maximum.

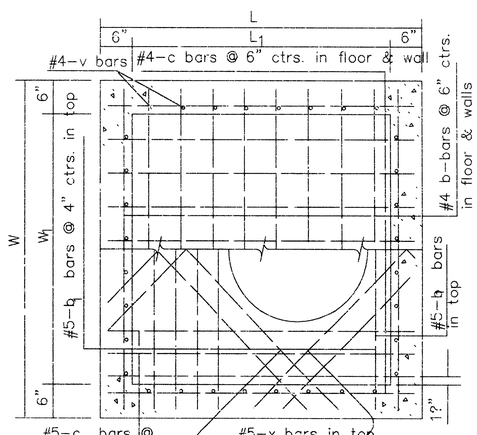

PLAN (Showing top & floor reinf.)

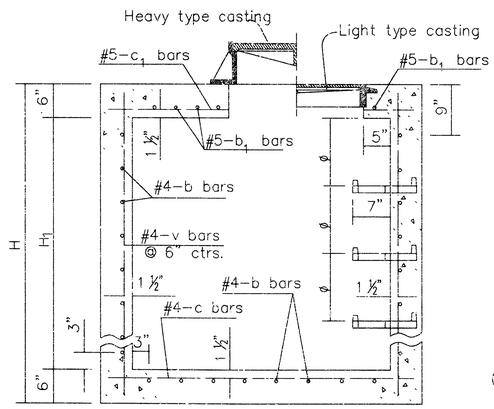

Where dimension "L" or "W" is greater than 6'–0" use 8" slab thickness.

SECTION (Exclusive of floor shaping)

NO.	DATE	REVISIONS	BY	APP'D
30	12-12-97	Revised step spacing	R.J.S.	J.O.B.
2S	12-27-95	Delete paint note	R.J.S.	J.O.B.
28	1-30-92	Rev. paint&step notes, ent on CADD	R.J.S.	J.O.B.

KANSAS DEPARTMENT OF TRANSPORTATION

REINFORCED CONCRETE MANHOLE

FHWA APPROVAL	2-2-98	APP'D James O. Brewer	
DESIGNED	DETAILED	QUANTITIES	TRACED Bowser
DESIGN CK.	DETAIL CK.	QUAN.CK.	TRACE CK. Seitz

18 08 02 11

DRAWN: CK/A	DATE: 12\00	SHEET 2
DESIGNED: HDL	SCALE: NONE	TOTAL 2
CHECKED: HDL	CED FILE: STAFEI-2.DWG	

CED
810 WEST DOUGLAS, SUITE C
WICHITA, KANSAS 67203
PH.(316)265-8888 FAX.(316)265-1688

CERTIFIED ENGINEERING DESIGN

COM PRV. PROJ NO.: 1081 PPS(80787)

CURB INLET DETAILS

CITY OF WICHITA STANDARD TYPE I

INLET OPENING = 8'-0" x 10'-0"

GENERAL NOTES

1. Concrete tops to be installed on thin mortar cushion to insure full support along thick walls. Concrete tops may be cast in place or precast. Concrete used for inlet construction shall be concrete pavement mix.
2. Contractor shall have the option to construct 8" thick masonry walls between the concrete inlet pads and top as in this inlet menu W=8'-4" and H=7'-0" or less.
3. Inlet invert shall be graded with 8 sack grout mix concrete to create flow channels and to increase hydraulic efficiency such that the inlet will be self cleaning between all inlet and/or outlet pipes.
4. The ends of all pipes installed in inlets shall be cut flush with the inside face of the inlet wall.

SECTION B-B

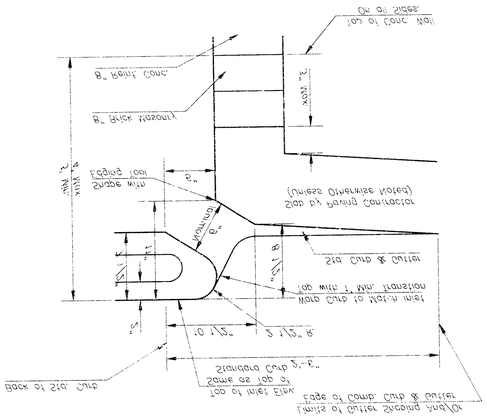

BENDING DIAGRAM

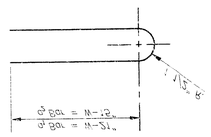

MANHOLE RING AND COVER

See City of Wichita Standard Manhole Ring and Cover Detail Sheet for Cover Details to be Used With Inlet Frame.

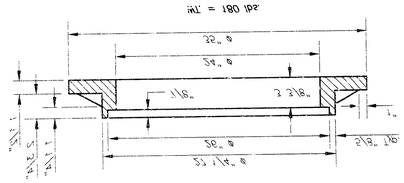

STEEL SCHEDULE

BAR	d'	d2	d3	N'=8'-4"	N'=9'-4"	N'=10'-4"	N'=11'-4"	N'=12'-4"	d1	d2	d3	TOT. WT.
NUMBER	4	4	5	7	5	5	7	3	0	1	1	
SIZE	#4	#4	#4	#4	#4	#4	#4	#4	#4	#4	#8	
N=8'-4"	3'-4"	2'-0"	8'-0"	-	-	-	-	-	1'-8"	3'-5"	4'-8"	80 LBS.
N=9'-4"	3'-4"	2'-0"	9'-0"	-	-	-	-	-	1'-8"	3'-5"	4'-8"	86 LBS.
N=10'-4"	3'-4"	2'-0"	10'-0"	-	-	-	-	-	1'-8"	3'-5"	4'-8"	92 LBS.
N=11'-4"	3'-4"	2'-0"	11'-0"	-	-	-	-	-	1'-8"	3'-5"	4'-8"	101 LBS.
N=12'-4"	3'-4"	2'-0"	12'-0"	-	-	-	-	-	1'-8"	3'-5"	4'-8"	107 LBS.

Note: d2 Bars to be placed approx. 3" below top of inlet cover.

STANDARD CURB INLET PRECAST TOPS

N	PRE-CAST TOP SIZE	MAX. SIZE	LBS. TO CONC.
4'-4"	3'-8" x 4'-4" x 15"	5'-4" & SMALLER	2850
5'-4"	3'-8" x 5'-4" x 15"	6'-4" & SMALLER	3500
6'-4"	3'-8" x 6'-4" x 15"	7'-4" & SMALLER	4150
7'-4"	3'-8" x 7'-4" x 15"	8'-4" & SMALLER	4800
8'-4"	3'-8" x 8'-4" x 15"	9'-4" & SMALLER	5450

SECTION C-C

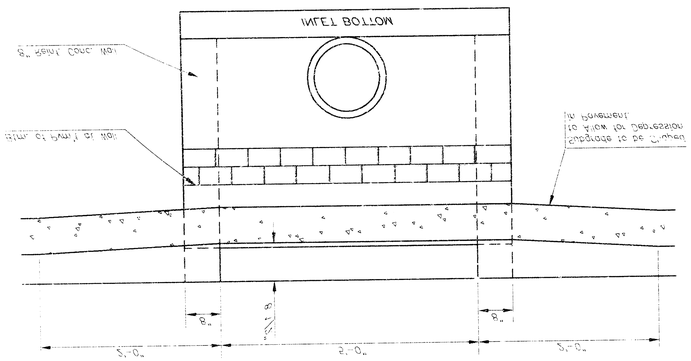

SECTION A-A

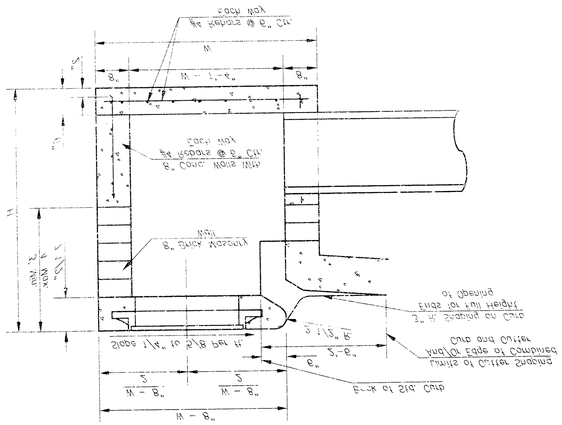

PLAN

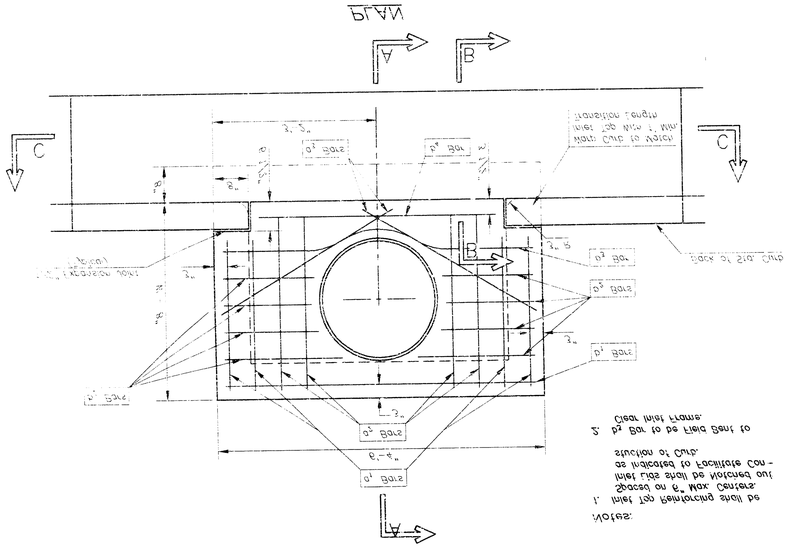
A
B
C
C
A
B
Transition Length
Inlet to Min. 1' Min.
Match Curb to Match
Back of Slip Curb
d1 Bars
d2 Bars
d3 Bars
d1 Bars
d2 Bars
d3 Bars
8"
8"
8"