CITY OF WICHITA, KANSAS
MICHAEL E. LINDEBAK, P.E., CITY ENGINEER

STORM WATER IMPROVEMENTS
IN
ROCKWOOD CENTER 2ND ADDITION
CITY OF WICHITA PRIVATE PROJECT NO. 1083PPS(6007861)

INDEX OF SHEETS

C1 TITLE & PLAT
C7 UTILITY & SITE PLAN
C8 TYPE "P" MANHOLE
C9 FRAME & COVER

APPROVED AS NOTED
BY CITY ENGINEER OF WICHITA

SANITARY SEWERS _____
STORM SEWERS VRH 1/17/01
DRIVEWAY APPROACHES _____
WATER MAINS _____
PAVING _____

NOTE TO CONTRACTOR

INSPECTION AND TESTING FOR THIS PROJECT IS TO BE PROVIDED BY A LICENSED CONSULTING ENGINEERING FIRM CONTRACTED BY THE OWNER/DEVELOPER. SAID INSPECTION TO BE IN ACCORDANCE WITH THE CITY OF WICHITA STANDARD CONSTRUCTION ENGINEERING PRACTICES AND CERTIFIED BY A LICENSED PROFESSIONAL ENGINEER. NO WORK SHALL BE PERFORMED IN DEDICATED EASEMENTS OR PUBLIC RIGHT-OF-WAY BY THE CONTRACTOR UNTIL SUCH INSPECTION IS ARRANGED FOR AND REQUIRED BONDS HAVE BEEN SUBMITTED TO AND APPROVED BY THE CITY NOR SHALL ANY WORK BE COMMENCED IN DEDICATED EASEMENTS OR PUBLIC RIGHT-OF-WAY WITHOUT WRITTEN AUTHORIZATION BY THE CITY ENGINEER. IMPROVEMENTS PERFORMED UNDER THIS PROJECT SHALL NOT BE ACCEPTED BY THE CITY UNTIL ALL APPLICABLE DOCUMENTATION HAS BEEN SUBMITTED TO THE CITY ENGINEER. THIS MAY INCLUDE: AS-BUILT DRAWINGS, INSPECTION LOGS, TEST DOCUMENTATION, TV TAPES, AND A CERTIFICATE OF COMPLETION. THE ABOVE SHALL BE PERFORMED BY THE CONSULTING FIRM CONTRACTED TO INSPECT THIS PROJECT.

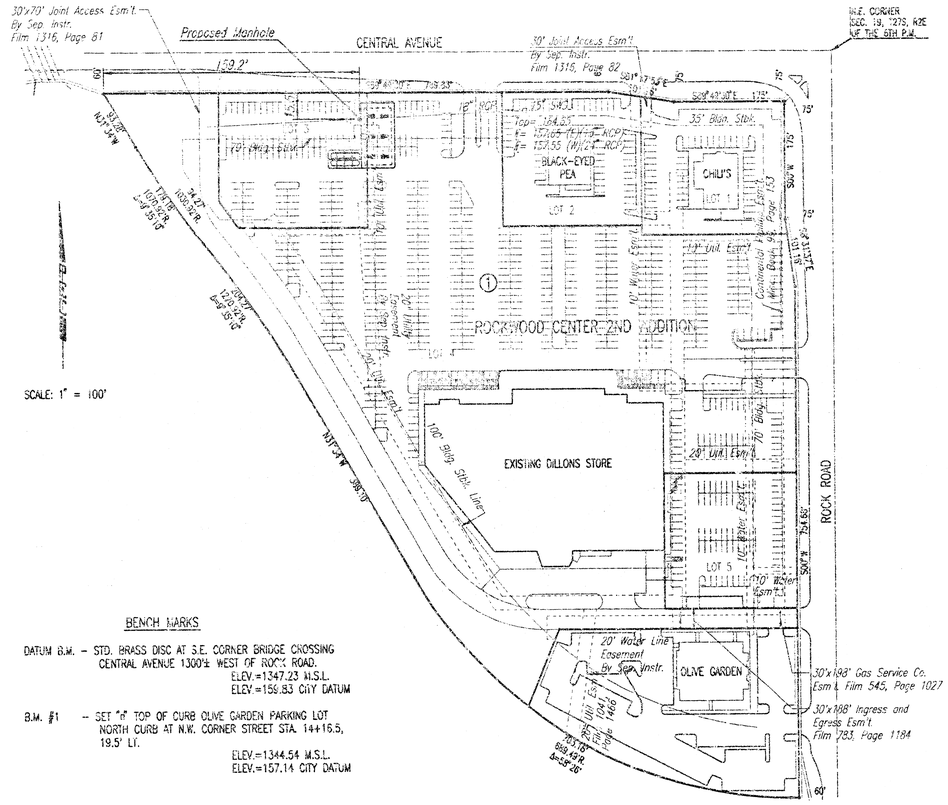

SCALE: 1" = 100'

BENCH MARKS

DATUM B.M. – STD. BRASS DISC AT S.E. CORNER BRIDGE CROSSING CENTRAL AVENUE 1300'± WEST OF ROCK ROAD.
ELEV.=1347.23 M.S.L.
ELEV.=155.83 CITY DATUM

B.M. #1 – SET "+" TOP OF CURB OLIVE GARDEN PARKING LOT NORTH CURB AT N.W. CORNER STREET STA. 14+16.5, 19.5' LT.
ELEV.=1344.54 M.S.L.
ELEV.=157.14 CITY DATUM

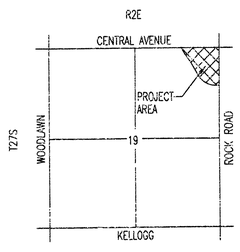

VICINITY MAP

GENERAL NOTES

UNDERGROUND UTILITY SERVICE LINES AND OVERHEAD UTILITY POLE LINES ARE TO BE ADJUSTED AS NECESSARY BY OTHERS PRIOR TO CONSTRUCTION UNLESS THE PLANS SPECIFICALLY CALL FOR THEIR ADJUSTMENT BY THE CONTRACTOR. EXISTING UTILITIES AND THEIR LOCATION, AS SHOWN ON THE PLANS, REPRESENT THE BEST INFORMATION OBTAINABLE FOR DESIGN. LOCATION INFORMATION HAS BEEN OBTAINED FROM THE VARIOUS UTILITY COMPANIES AND IS EITHER FROM COMPANY RECORD DRAWINGS OR COMPANY PROVIDED FIELD LOCATIONS. THE CONTRACTOR WILL BE REQUIRED TO WORK AROUND EXISTING UTILITIES WITHIN THE RIGHT-OF-WAY WHICH DO NOT CONFLICT WITH PROPOSED CONSTRUCTION. CONTRACTOR SHALL SATISFY HIMSELF OF SUBSURFACE CONDITIONS PRIOR TO BIDDING.

TREES AND SHRUBS IN PUBLIC RIGHT-OF-WAY WHICH ARE IN DIRECT CONFLICT WITH PROPOSED NEW CONSTRUCTION SHALL BE REMOVED BY THE CONTRACTOR WITH THE ENGINEER'S APPROVAL. TREES AND SHRUBS WHICH ARE NOT IN DIRECT CONFLICT WITH PROPOSED NEW CONSTRUCTION SHALL BE SAVED AND PROTECTED FROM DAMAGE.

RUBBLE FROM THE REMOVAL OF MISCELLANEOUS STRUCTURES SHALL BE DISPOSED OF ON SITES TO BE PROVIDED BY THE CONTRACTOR AND APPROVED AS NOTED.

ALL DISPOSAL SITES MUST BE APPROVED BY THE KANSAS DEPARTMENT OF HEALTH AND ENVIRONMENT. MATERIAL EITHER STOCKPILED OR DISPOSED OF IN A FLOOD PLAIN WOULD REQUIRE A KANSAS STATE BOARD OF AGRICULTURE PERMIT. ANY MATERIAL DUMPED IN WATERS OF THE UNITED STATES OR WETLANDS IS SUBJECT TO U.S. CORPS OF ENGINEERS PERMITTING REGULATIONS. ANY MATERIAL BURIED OR STOCKPILED BEYOND APPROVED CONSTRUCTION LIMITS WOULD REQUIRE ADDITIONAL ARCHEOLOGICAL INVESTIGATIONS UNLESS BURIED IN A PREVIOUSLY APPROVED BORROW LOCATION.

CONTRACTOR SHALL PROTECT ADJACENT ROADWAYS AND STORM SEWER SYSTEMS FROM DEBRIS AND SEDIMENT LADEN RUNOFF THROUGHOUT CONSTRUCTION. SEE SH. NO. C8 FOR EROSION CONTROL MEASURES.

EXCEPT WHERE NOTED ON THE PLANS TO BE REMOVED, THE CONTRACTOR SHALL REPLACE ANY PLANT MATERIAL DISTURBED BY CONSTRUCTION ACTIVITIES.

CONTRACTOR SHALL PROVIDE A MINIMUM FORTY-EIGHT (48) HOUR ADVANCE NOTICE (EXCLUDING WEEKENDS AND HOLIDAYS) PRIOR TO BEGINNING ANY EXCAVATION, TO KANSAS ONE-CALL SYSTEM, A UTILITY LOCATION SERVICE, AT (316) 687-2470 TO REQUEST THE FOLLOWING UTILITY COMPANIES TO LOCATE ALL EXISTING LINES WITHIN THE PROJECT AREA: K.G.S. GAS, PEOPLES NATURAL GAS, K.G.E. ELECTRIC, SOUTHWESTERN BELL TELEPHONE, COX COMMUNICATIONS, CITY OF WICHITA SEWER MAINTENANCE AND CITY OF WICHITA WATER DEPARTMENT.

THE CONTRACTOR SHALL BE RESPONSIBLE FOR PRESERVING PROPERTY IRONS. THE CONTRACTOR WILL BE REQUIRED TO RE-ESTABLISH ANY PROPERTY IRONS WHICH ARE DAMAGED OR DESTROYED BY HIS CONSTRUCTION OPERATIONS. SUCH IRONS SHALL BE RE-ESTABLISHED BY A LICENSED LAND SURVEYOR IN ACCORDANCE WITH STATE LAWS.

THE WATER DEPARTMENT SHALL FIELD LOCATE WATER VALVES ONE TIME DURING CONSTRUCTION WHEN REQUESTED BY THE CONTRACTOR. IT SHALL BE THE CONTRACTOR'S RESPONSIBILITY TO PRESERVE SUCH FIELD LOCATIONS DURING THE CONSTRUCTION PROCESS. WATER VALVES, WATER VALVE BOXES OR FIRE HYDRANTS DAMAGED DURING CONSTRUCTION SHALL BE REPAIRED BY THE CONTRACTOR AT HIS OWN EXPENSE.

THE CONTRACTOR SHALL ADJUST WATER VALVE BOXES AS DIRECTED BY THE ENGINEER.

ALL ELEVATIONS SHOWN ON PLANS ARE TO CITY OF WICHITA DATUM.

PROPOSED KIOSK BUILDING TO BE LOCATED 410 FEET FROM EXISTING DILLON'S STORE TO THE SOUTH.

JANUARY 2001

PLANS PREPARED BY
PROFESSIONAL ENGINEERING CONSULTANTS, P.A.
ENGINEERS
WICHITA, KANSAS

Professional Engineering Consultants, P.A.
303 S. TOPEKA • WICHITA, KANSAS 67202
TEL 316 263-2661 • FAX 316 263-2663

Dillon Stores
2700 Commerce Blvd.
Manhattan, KS 66502
Phone: (316) 565-5511

The Kroger Co.
Store Number 577
Phone: (316) 942-4411

REVISIONS

No.	DESCRIPTION	DES. BY	DRAWN BY	DATE
1	CHANGED PRODUCT STORAGE TANK SIZE	Rwh	KER	12/07/00

Project #:	36-00477-0645
Designed By:	DNC, KER
Drawn By:	DEP
Checked By:	
Date:	OCTOBER 23, 2000
Scale:	1"=80'
Disk File:	
Model:	
Address:	7707 E. CENTRAL WICHITA, KANSAS

TITLE & PLAT

Drawing No.: C1

1=40.00
\dwg\PW_SWC_TITLE 01-16-2001 01:23:48 pm

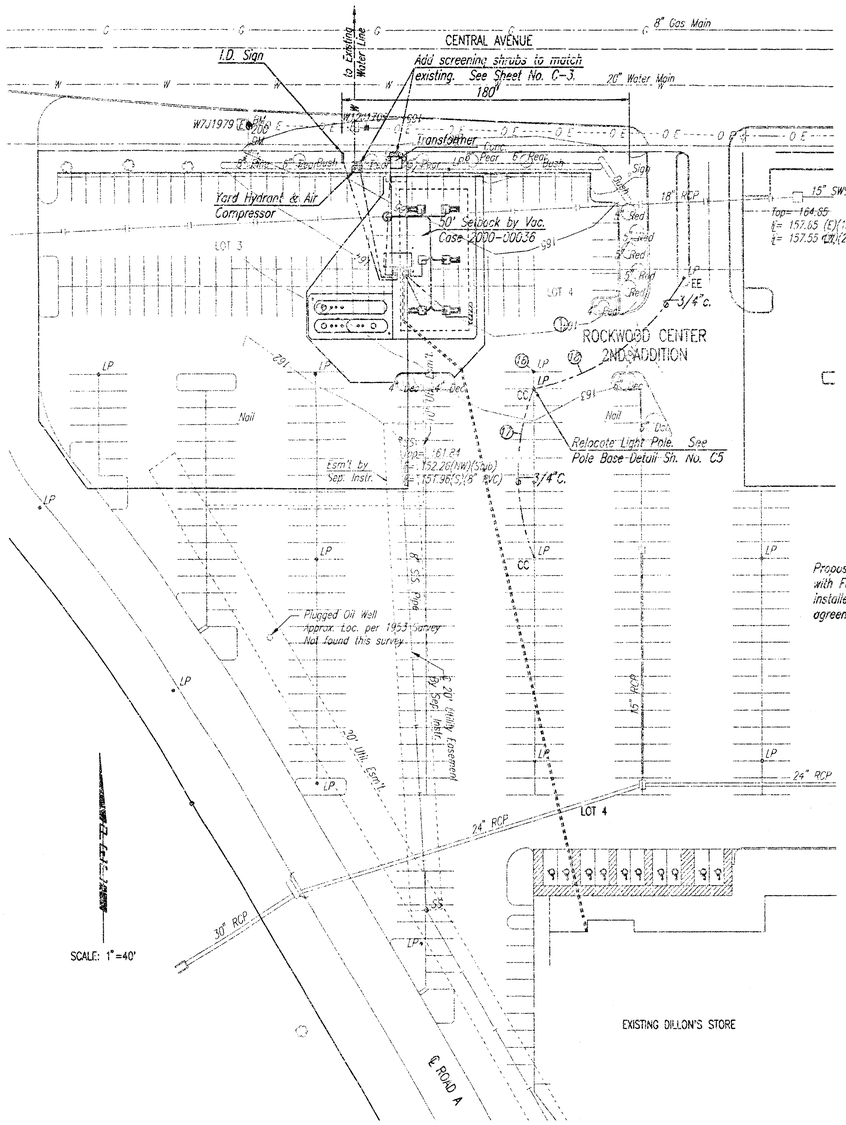

Proposed 8" Water line with Fire hydrant to be installed under seperate agreement.

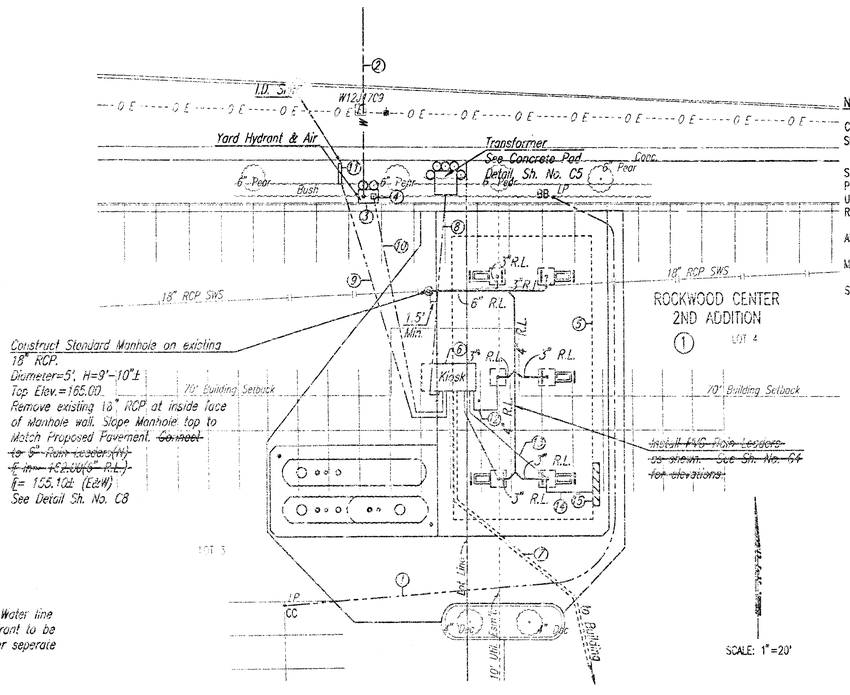

NOTES

CONTRACTOR TO COORDINATE WITH KGE FOR ELECTRIC SERVICE FOR THE FUEL STATION.

SEE SH. NO. P4 FOR TYPICAL PRODUCT PIPING. PIPING FROM THE DISPENSER ISLANDS TO THE UNDERGROUND PRODUCT STORAGE TANK SHOULD BE ROUTED ABOVE THE EXISTING 24" RCP.

ALL CONDUITS SHALL BE INSTALLED WITH PULL WIRE.

MINIMUM SLOPES ON RAIN LEADERS SHALL BE 1/4"/FT.

SEE GRADING PLAN FOR RAIN LEADERS ELEVATIONS.

Benchmark:
South side of Central 300' West of Rock Road.
Elev.= 166.30

UTILITY NOTES

A. CONTRACTOR SHALL COORDINATE THE INSTALLATION OF ELECTRICAL, TELEPHONE AND WATER SERVICES WITH APPROPRIATE LOCAL UTILITY COMPANIES.

B. CONTRACTOR SHALL INCLUDE ALL ASSOCIATED UTILITY CONNECTION EXPENSES INCLUDING: TAPS, METERS, POLES, ETC. IN SUBMITTED PRICE.

C. SEE GENERAL NOTES ON SHEET NO. C1 FOR ADDITIONAL REQUIREMENTS.

D. ALL ELECTRICAL WORK SHALL CONFORM TO ALL APPLICABLE NATIONAL ELECTRIC CODE SECTIONS. REFER TO SECTIONS 514 FOR REQUIREMENTS ASSOCIATED WITH GAS STATIONS.

KEY NOTES

(1) INTERCEPT EXISTING CONDUIT AND REROUTE LIGHTING CIRCUIT WIRING AROUND NEW GAS KIOSK CONSTRUCTION AREA IN 3/4"C. REPULL WIRING FROM LIGHTING POLE "CC" TO LIGHTING POLE "BB" AND RECONNECT.

(2) INSTALL 3/4" SCH. 40 PVC WATER SERVICE LINE FROM WATER METER TO YARD HYDRANT. MAINTAIN 36" MINIMUM COVER. CONTRACTOR SHALL COORDINATE THE LOCATION AND SETTING OF WATER METER WITH LOCAL WATER COMPANY. AT LEAST 1 WEEK PRIOR TO BEGINNING CONSTRUCTION, THE CONTRACTOR SHALL CONTACT THE WICHITA WATER DEPARTMENT TO SCHEDULE THE TAP TO THE EXISTING WATER MAIN, AND PAY THE REQUIRED FEES AND OBTAIN THE NECESSARY PERMIT.

(3) INSTALL FROST PROOF YARD HYDRANT. SEE DETAIL SH. NO. C5.

(4) INSTALL FREESTANDING AIR COMPRESSOR PROVIDED BY OWNER ON 6" THICK 4'X8' CONCRETE AIR COMPRESSOR MOUNTING PAD. PAD SHALL BE REINFORCED WITH #4 BARS @ 18" O.C. E.W. COORDINATE WITH ARCHITECTURAL DRAWINGS.

(5) PREFABRICATED CANOPY SYSTEM (TO BE INSTALL BY OTHERS) WHERE INDICATED ON PLAN. CONTRACTOR TO INSTALL FOOTINGS, CONDUITS, AND CONDUCTORS. COORDINATE WITH ARCHITECTURAL DRAWINGS.

(6) INSTALL PREFABRICATED KIOSK WHERE INDICATED ON PLAN. COORDINATE WITH ARCHITECTURAL DRAWINGS.

(7) INSTALL (2) 2" CONDUITS FROM KIOSK TO MANAGERS OFFICE INSIDE OF MAIN DILLONS FOOD STORE. ONE CONDUIT TO BE USED FOR SECURITY SYSTEM CABLES (FURNISHED AND INSTALLED BY OTHERS) AND CONDUCTORS FOR INTERCOM (FURNISHED BY OWNER AND INSTALLED BY CONTRACTOR). THE OTHER CONDUIT SHALL BE USED FOR COMPUTER COMMUNICATION CABLE. COORDINATE WITH OWNER'S REPRESENTATIVE FOR EXACT LOCATION OF ENTRY POINT INTO SUPERMARKET. INSTALLATIONS OF THESE CONDUITS SHALL BE ACCOMPLISHED BY BOARING BETWEEN THE KIOSK AND THE POINT OF ENTRY TO SUPERMARKET BUILDING.

(8) INSTALL 120/208 200 AMP THREE PHASE ELECTRIC SERVICE TO KIOSK POWER PANEL. CONTRACTOR SHALL BE RESPONSIBLE FOR ALL TRENCHING, (1) 4" CONDUIT AND BACKFILLING FROM POWER SOURCE INDICATED ON PLAN.

(9) INSTALL (2) 3/4" CONDUITS FROM KIOSK TO FREE STANDING MONUMENT SIGN, ONE CONDUIT TO BE USED FOR AC CIRCUIT FOR PRICE SIGN LIGHTING AND A SEPARATE AC CIRCUIT FOR PRICE SIGN CONTROLLER MOUNTED ON BACK OF MONUMENT SIGN. THE OTHER CONDUIT TO BE USED FOR LOW VOLTAGE COMMUNICATION CABLE (FURNISHED WITH SIGN) TO SIGN CONTROLLER (FURNISHED WITH SIGN) MOUNTED ON BACK OF MONUMENT SIGN. CONTROL CABLE (FURNISHED WITH SIGN) CONNECTING THE PRICE SIGN TO THE SIGN CONTROLLER TO BE INSTALLED ON THE BACK OF MONUMENT SIGN.

(10) INSTALL 3/4" CONDUIT FROM KIOSK TO AIR COMPRESSOR FOR AC CIRCUIT.

(11) INSTALL I.D. SIGN. SEE DETAIL 5, SHEET A2.

(12) INSTALL (2) 1" CONDUITS FROM KIOSK TO INSIDE OF CANOPY COLUMN CLOSEST TO KIOSK. ONE CONDUIT TO BE USED FOR AC CIRCUITS FOR CANOPY LIGHTING. THE OTHER CONDUIT TO BE LEFT EMPTY FOR USE BY THE SECURITY SYSTEM INSTALLATION CONTRACTOR.

(13) INSTALL (2) 3/4" CONDUITS FROM KIOSK TO INSIDE OF CANOPY COLUMN CLOSEST TO CANOPY PRICE SIGN. ONE CONDUIT TO BE USED FOR AC CIRCUIT FOR PRICE SIGN LIGHTING AND A SEPARATE AC CIRCUIT FOR PRICE SIGN CONTROLLER MOUNTED ON CANOPY COLUMN. THE OTHER CONDUIT TO BE USED FOR LOW VOLTAGE COMMUNICATION CABLE (FURNISHED WITH SIGN) TO SIGN CONTROLLER (FURNISHED WITH SIGN) MOUNTED ON CANOPY COLUMN.

(14) INSTALL 2 1/2" PVC CONDUIT FROM CANOPY COLUMN (INDICATED IN KEYNOTE #13) AT A POINT ABOVE CANOPY DECKING TO THE JUNCTION BOX ON THE BACK SIDE OF THE CANOPY PRICE SIGN FOR INSTALLATION OF THE CONTROL CABLE (FURNISHED WITH SIGN) CONNECTING THE PRICE SIGN TO THE SIGN CONTROLLER. TOTAL LENGTH OF CONDUIT SHALL NOT EXCEED 18'-0"

(15) 3'-6"x13'-0" PRICE SIGN MOUNTED ON CANOPY PER DETAIL 8, SHEET A2.

(16) RELOCATE EXISTING POLE AND FIXTURES AS SHOWN ON PLAN. REMOVE EXISTING POLE BASE.

(17) INTERCEPT EXISTING CONDUIT AND EXTEND RELOCATED POLE "CC". REPULL WIRING FROM EXISTING POLE "CC" TO RELOCATED POLE. FIELD VERIFY WIRING REQUIREMENTS.

(18) INTERCEPT EXISTING CONDUIT AND EXTEND TO RELOCATED POLE "CC". REPULL WIRING FROM POLE "CC" TO POLE "EE". FIELD VERIFY WIRING REQUIREMENTS.

Professional Engineering Consultants, P.A.
303 S. TERRACE WICHITA, KANSAS 67202
316 262 2691 • FAX 316 262 8003

Dillon Stores
2000 East Fourth
Hutchinson, Kansas 67501
Phone (316) 665-5011

The Kroger Co.
2650 Commerce, Suite 210
Kansas City, Kansas 66103
Phone (913) 677-4000

No.	DESCRIPTION	CHK. BY:	DRAWN BY:	DATE
1	REVISED CANOPY SIGN LOCATION	RMH	SAD	12/05/00
2	ADDED SCREENING SHRUBS.	RMH	SAD	12/05/00
3	CHANGED PRODUCT STORAGE TANK SIZE	RMH	KER	12/07/00

REVISIONS

Project #:	36-00477-0645
Designed By:	DRC, KER
Drawn By:	DEP
Checked By:	
Date:	OCTOBER 20, 2000
Scale:	1"=40'
Disk File:	
Model:	
Address:	1707 E. CENTRAL WICHITA, KANSAS

UTILITY & SITE PLAN

Drawing No.:

C7

1=40.00
dwg\CRVL.SWS 01-16-2001 01:16:32 pm

SEWER APPURTENANCES DETAILS

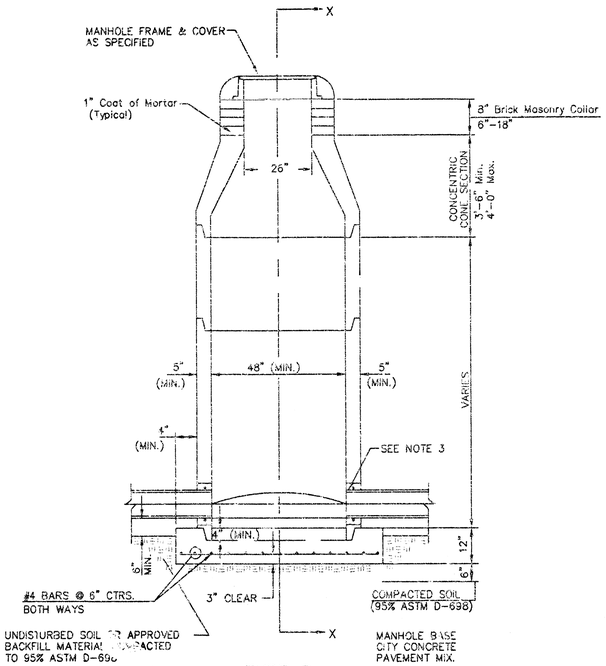

TYPE P
STANDARD MANHOLE

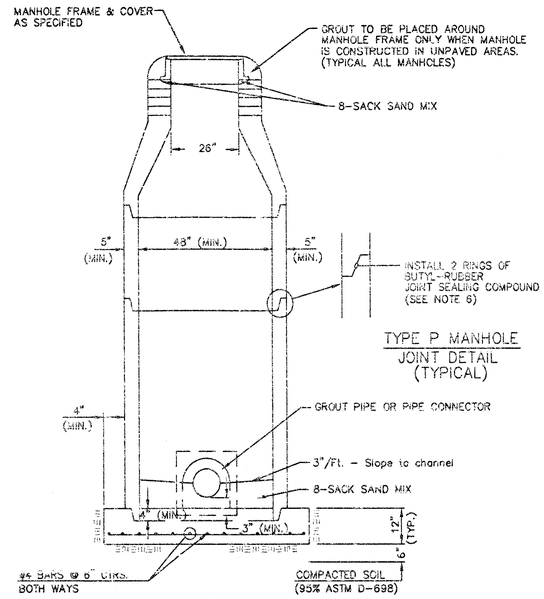

TYPE P MANHOLE
JOINT DETAIL
(TYPICAL)

SECTION X
(TYPICAL)

GENERAL NOTES

PRECAST MANHOLE NOTES

1. ALL PRECAST CONCRETE MANHOLE SECTIONS SHALL CONFORM TO THE LATEST REVISIONS OF A.S.T.M. C478 AS MODIFIED BY THE SPECIFICATIONS.
2. NON-SHRINK GROUT SHALL BE NON-METALLIC TYPE.
3. APPROVED FLEXIBLE WATERSTOP GASKETS SHALL BE INSTALLED TO JOIN THE SEWER TO THE MANHOLE WALL WHEN A.B.S. COMPOSITE PIPE OR P.V.C. PIPE IS USED. FOR OTHER TYPES OF PIPE THE SEWER SHALL BE GROUTED IN PLACE WITH NON-SHRINK GROUT. THE SEWER PIPE SHALL BE SUPPORTED WITH CONCRETE ENCASEMENT A MINIMUM OF 3 FEET FROM THE MANHOLE WALL AND TO THE FIRST JOINT FOR V.C.P. SUCH THAT THE JOINT REMAINS FLEXIBLE.
4. ALL INSIDE SURFACES OF THE CONCRETE MANHOLE WHICH WOULD BE EXPOSED TO SEWER GAS SHALL BE COATED WITH 2 COATS TNEMEC SERIES 66 HI-BUILD EPOXOLINE, DRY THICKNESS OF 8 MILS (MIN.)
5. EXTERIOR MANHOLE WALLS SHALL BE COATED WITH 1 COAT MOBILARMA 633 BITUMINOUS COATING.
6. JOINT SEALING COMPOUND SHALL BE KENT SEAL NO. 2 OR APPROVED EQUAL.
7. PRECAST MANHOLES SHALL BE SET AT LEAST 4 INCHES INTO THE MANHOLE BASE.
8. TOP OF MANHOLE FLOOR SLAB SHALL BE AT LEAST 3 INCHES BELOW THE FLOW LINE OF THE OUTLET PIPE TO INSURE SUFFICIENT MINIMUM THICKNESS OF SHAPED INVERT.
9. LIFTING HOLES SHALL BE FILLED WITH NON-SHRINK GROUT AND THE INTERIOR SURFACE COATED AS SPECIFIED.
10. MORTAR USED IN MASONRY CONSTRUCTION SHALL CONTAIN 8 SACKS OF CEMENT PER CUBIC YARD. CONCRETE USED IN MANHOLE BASES SHALL CONFORM TO THE REQUIREMENTS OF CONCRETE FOR CONCRETE PAVEMENT CONSTRUCTION AS SPECIFIED IN THE CITY STANDARD PAVING SPECIFICATIONS USING CITY CONCRETE PAVEMENT MIX WITHOUT AIR ENTRAINING ADMIXTURE. MORTAR SHALL BE PLACED AROUND THE MANHOLE RING AS SHOWN ON THE DRAWINGS WHEN MANHOLES ARE CONSTRUCTED IN UNPAVED AREAS. MANHOLES CONSTRUCTED WHERE PIPE SIZES ARE SMALLER THAN 24" SHALL HAVE AN INSIDE DIAMETER OF 4'. MANHOLES CONSTRUCTED WHERE PIPE SIZES ARE 24" OR LARGER SHALL HAVE AN INSIDE DIAMETER OF 5'. COMPLETED MANHOLE SHALL BE WITHOUT LEAKS AND WATER TIGHT.
11. REINFORCING STEEL SHALL BE INSTALLED IN THE MANHOLE BASES AND SHALL CONSIST OF NO. 4 BARS PLACED ON 6" CENTERS IN BOTH DIRECTIONS. THE MANHOLE BASE REINFORCEMENT SHALL BE PLACED AT LEAST 3" ABOVE THE BOTTOM OF THE MANHOLE BASE. ALL COSTS FOR FURNISHING AND INSTALLING REINFORCING STEEL SHALL BE INCLUDED IN THE UNIT PRICE BID FOR THE MANHOLE.
12. OPENINGS SHALL BE CUT INTO THE MANHOLE WALL WHEN OUTSIDE DROPS ARE CONSTRUCTED ON EXISTING MANHOLES. SUCH OPENINGS CUT INTO EXISTING MANHOLES SHALL BE AS SMALL AS PRACTICAL TO FACILITATE INSTALLING AND GROUTING THE NEW PIPE IN PLACE. WATERSTOP GASKETS SHALL BE USED WITH P.V.C. AND A.B.S. COMPOSITE PIPE. THE NEW PIPE SHALL BE GROUTED INTO THE OPENING USING AN APPROVED NONSHRINK GROUT FOR THE FULL MANHOLE WALL THICKNESS. THE EXTERIOR OF THE COMPLETED CONNECTION SHALL BE SEALED WITH AN APPROVED BITUMINOUS COATING SUCH THAT THE CONNECTION WILL BE WATER TIGHT. FLOOR OF MANHOLE SHALL BE MODIFIED TO FORM NEW FLOW CHANNEL FOR THE NEW CONNECTION AS INDICATED BY THE DRAWING. THIS WORK, INCLUDING MODIFICATION OF MANHOLE FLOOR, SHALL BE PAID FOR AT THE UNIT PRICE BID FOR OUTSIDE DROP STACK CONSTRUCTED ON EXISTING MANHOLE.
13. THE FLOORS OF ALL MANHOLES SHALL BE SHAPED WITH FLOW CHANNELS SUCH THAT THE MANHOLES WILL BE SELF CLEANING AND FREE OF AREAS WHERE SOLIDS COULD BE DEPOSITED AS SEWAGE FLOWS THROUGH THE MANHOLE FROM ALL INLET PIPES TO THE OUTLET PIPE. FLOW CHANNELS SHALL BE FORMED TO MATCH THE BOTTOM HALVES OF THE INFLOWING PIPES AND THE OUTFLOWING PIPE AS SHOWN BY THE DRAWINGS EXCEPT FOR INSIDE DROP MANHOLES. FLOW CHANNELS FOR INSIDE DROP MANHOLES SHALL BE CONSTRUCTED AS INDICATED BY THE DRAWING. MANHOLE FLOORS SHALL HAVE SLOPES OF 3 INCHES PER FOOT IN THE AREAS OUTSIDE OF THE FLOW CHANNELS SLOPED TOWARD THE FLOW CHANNELS. PIPES LAID THROUGH MANHOLES SHALL HAVE THE TOP HALF REMOVED TO NEAT LINES FOR THE FULL INSIDE DIAMETER OF THE MANHOLE. MANHOLE FLOORS SHALL THEN BE SHAPED AROUND THE BOTTOM HALF OF THE PIPE WHICH FORMS THE FLOW CHANNEL.
14. PIPES INSTALLED WITHIN THE EXCAVATION MADE FOR THE MANHOLE SHALL BE CRADLED WITH CONCRETE TO THE LIMITS OF THE MANHOLE EXCAVATION. WHEN CLAY PIPE IS USED, THE CRADLE SHALL EXTEND TO THE FIRST JOINT OUTSIDE THE MANHOLE. THE CRADLE SHALL BE TERMINATED AT THE CLAY PIPE JOINT IN A MANNER WHICH WILL MAINTAIN THE FLEXIBILITY OF THE JOINT. COST OF CRADLE WITHIN MANHOLE EXCAVATION OR TO CLAY PIPE JOINTS ADJACENT TO MANHOLE SHALL BE INCLUDED IN THE UNIT PRICE BID FOR THE MANHOLE.
15. MANHOLE COVER CASTINGS AND MANHOLE FRAME CASTINGS SHALL CONFORM TO THE REQUIREMENTS AS INDICATED IN THE STANDARD SPECIFICATIONS AND AS SHOWN IN THE STANDARD DETAIL DRAWING.
16. THE VERTICAL DROP IN INSIDE DROP MANHOLES SHALL NOT EXCEED 2' FOR INFLOWING PIPES SIZED 12" OR SMALLER AND 2' FOR INFLOWING PIPES LARGER THAN 12". THE CROWNS OF INFLOWING PIPES SHALL NEVER BE SET LOWER THAN THE CROWN OF THE OUTFLOWING PIPE.
17. STANDARD MANHOLES AND STANDARD INSIDE DROP MANHOLES SHALL BE BID AS STANDARD MANHOLES FOR THE TYPE AND DIAMETER INDICATED. OUTSIDE DROP MANHOLES SHALL BE BID AS STANDARD OUTSIDE DROP MANHOLES FOR THE TYPE AND DIAMETER INDICATED. ALL MANHOLE DIAMETERS WILL BE 4' UNLESS INDICATED OTHERWISE.
18. A BRICK MASONRY COLLAR SHALL BE INSTALLED BETWEEN THE CAST IRON FRAME AND THE CONCENTRIC CONE. THE COLLAR WILL HAVE 8" WALLS AND A VERTICAL HEIGHT OF 6" MINIMUM AND 18" MAXIMUM. A 1" COAT OF MORTAR WILL BE PLASTERED ON THE OUTSIDE OF THE COLLAR. THE USE OF PRE-CAST CONCRETE SPACERS FOR MANHOLE TOP ADJUSTMENT IS ALSO ALLOWED.

ADAPTED FROM CITY OF WICHITA STANDARD TYPE "P" MANHOLE

Professional Engineering Consultants, P.A.
303 S. TOPEKA · WICHITA, KANSAS 67202
316-262-2691 · FAX 316-262-5000

Dillon Stores
2300 Edd Houston
Hutchinson, KS
Phone (316) 663-5551

The Kroger Co.
Store Development Dept. #16
Phone (316) 686-7381
Fax (316) 686-8248

REVISIONS

No.	DESCRIPTION	DES. BY	DRAWN BY	DATE

Project #:	36-00477-0645
Designed By:	DRC, KER
Drawn By:	KER, SAD
Checked By:	
Date:	NOVEMBER 3, 2000
Scale:	NA
Disk File:	
Model:	

Address: 7707 E. CENTRAL WICHITA, KANSAS

STANDARD TYPE "P" MANHOLES

Drawing No.: C8

01-16-2001 02:38:59 pm
\TYPEPMH
1.00

MANHOLE COVER
Weight = 180 Lbs.

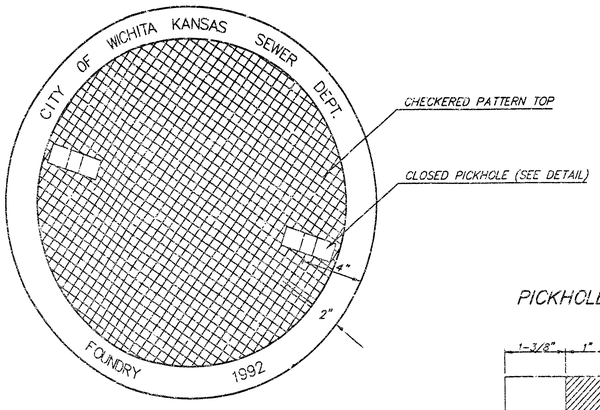

TOP VIEW

PICKHOLE DETAIL

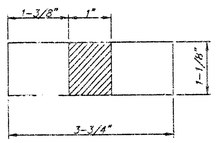

TOP VIEW

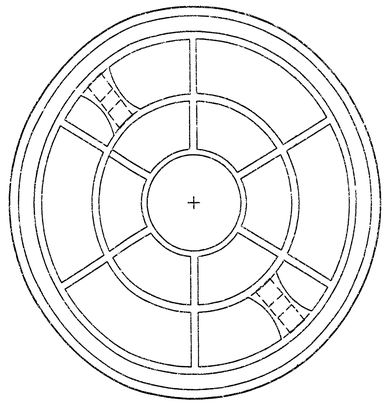

BOTTOM VIEW

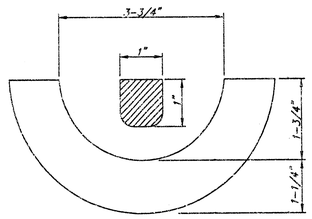

SECTION VIEW

MANHOLE FRAME
Weight = 240 Lbs.

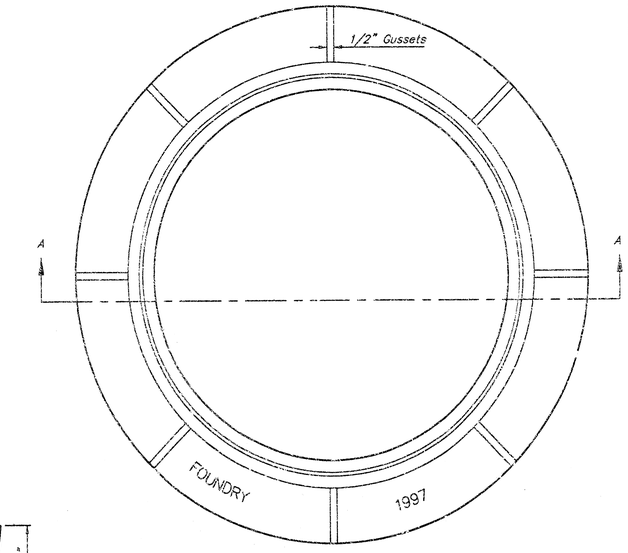

TOP VIEW

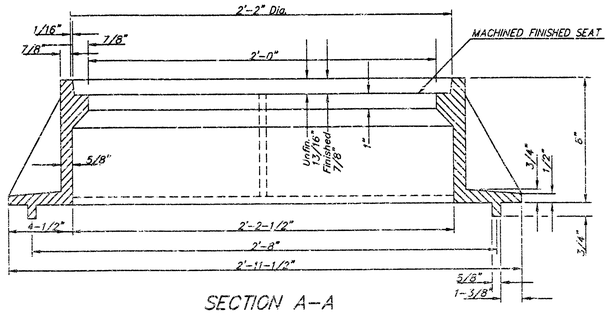

SECTION A–A
MUD RING

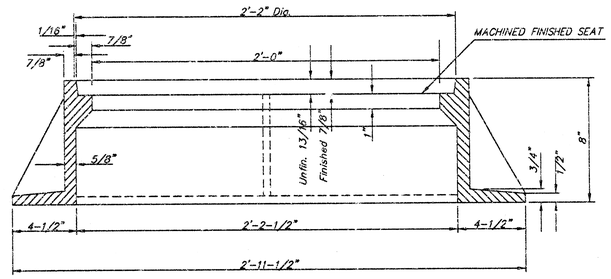

SECTION A–A

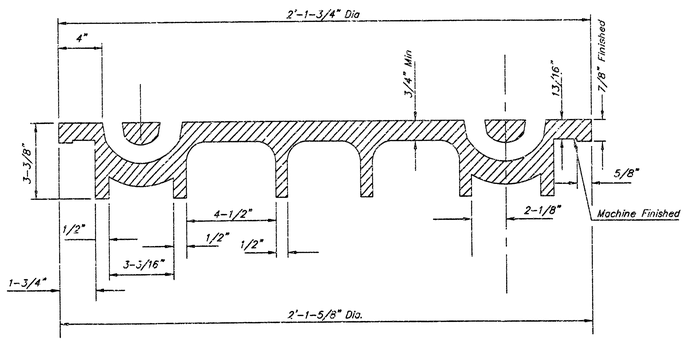

SECTION VIEW

GENERAL NOTES

1. MANHOLE CASTINGS SHALL BE MANUFACTURED USING GOOD QUALITY GRAY IRON CONFORMING TO CLASS 30 OF A.S.T.M. DESIGNATION A-48. DIMENSIONS AND WEIGHTS SHOWN ON THE DETAILED DRAWINGS SHALL BE CONSIDERED AS MINIMUM REQUIREMENTS AND ANY DEVIATIONS FROM THE DIMENSIONS SHOWN MUST BE SPECIFICALLY APPROVED. THE FINISHED CASTINGS SHALL BE OF UNIFORM QUALITY, FREE FROM BLOWHOLES, POROSITY, HARD SPOTS, SHRINKAGE DISTORTIONS OR OTHER DEFECTS.
2. MANHOLE CASTINGS SHALL WEIGH A MINIMUM OF 180 POUNDS ON THE SOLID COVER AND 240 POUNDS ON THE MANHOLE RING. THIS IS A TOTAL OF 420 POUNDS ON A RING AND COVER SET. CASTINGS WEIGHING LESS THAN THE MINIMUM SPECIFICATIONS WILL NOT BE ACCEPTED.
3. MANHOLE CASTINGS SHALL BE MANUFACTURED SUCH THAT A COVER MANUFACTURED BY ANY ONE FOUNDRY WILL FIT INTERCHANGEABLY INTO A FRAME MANUFACTURED BY ANOTHER FOUNDRY AND STILL MEET ALLOWABLE CLEARANCES AND NON-ROCKING REQUIREMENTS. THIS WILL REQUIRE MANUFACTURING OF THE MATCHING FACES ON THE COVER AND THE FRAME TO CLOSE TOLERANCES.
4. THE OUTSIDE CIRCUMFERENCE OF THE VERTICAL FACE OF THE COVER AND THE INSIDE CIRCUMFERENCE OF THE VERTICAL FACE IN THE FRAME RECESS SHALL BE MANUFACTURED TO TOLERANCES SUCH THAT THE CLEARANCE BETWEEN THE COVER AND FRAME WILL NOT EXCEED 1/8" AT ANY POINT AROUND THE CIRCUMFERENCE OF THE COVER. THE SEATING SURFACES BETWEEN THE COVER AND FRAME SHALL BE MACHINED SUCH THAT THESE SEATING SURFACES SHALL MAKE FULL CONTACT FOR THEIR FULL CIRCUMFERENCE TO PRECLUDE THE COVER FROM ROCKING IN THE FRAME.
5. THE MANHOLE FRAME AND COVER SHALL BE MARKED WITH LETTERING INDICATING THE NAME OF THE MANUFACTURER AND THE YEAR WHEN THE COVER OR FRAME WAS CAST. THE COVER SHALL BE FURTHER IDENTIFIED WITH REGARDS TO OWNERSHIP USING LETTERS AT LEAST 1 INCH IN HEIGHT. THIS IDENTIFICATION SHALL BE "CITY OF WICHITA SEWER DEPARTMENT". THE WORD DEPARTMENT MAY BE ABBREVIATED. THE TEXTURE OF THE TOP SURFACE OF THE COVER SHALL BE MANUFACTURED IN A CHECKERED PATTERN DESIGN AS INDICATED ON THE DRAWINGS. SMOOTH BLOCKOUTS SHALL BE UTILIZED TO HIGHLIGHT THE LETTERING ON THE COVER SURFACE. THE TOTAL AREA OF SMOOTH SURFACE BLOCKOUT SHALL NOT EXCEED THE AREA AS INDICATED ON THE DRAWING. POSITIONING OF SMOOTH BLOCKOUTS AND LETTERING MAY VARY FROM THAT SHOWN ON THE DETAILED DRAWING.

THE CITY OF WICHITA

CITY ENGINEER'S OFFICE
CITY HALL - SEVENTH FLOOR
455 NORTH MAIN STREET
WICHITA, KANSAS 67202
(316) 268-4501
(316) 268-4174 FAX

MANHOLE FRAME AND COVER

M. E. LINDEBAK P.E. - CITY ENGINEER

PROJECT NUMBER	OCA NO.
XXX-XXXXX	XXXXXX
DATE: MAR 96	SHEET X OF X

Professional Engineering Consultants, P.A.
303 S. TOPEKA • WICHITA, KANSAS 67202
316.263.2691 • FAX 316.262.3003

Professional Engineering Consultants, P.A.
303 S. Topeka • Wichita, KS 67202
316.262.2691 • FAX 316.262.3003

The Kroger Co.
Dillon Stores
2700 East Fourth
Hutchinson, KS 67502
Phone (316) 665-2811

REVISIONS

No.	DESCRIPTION	DES. BY	DRAWN BY	DATE

Project #:	36-00477-0645
Designed By:	DRC, KER
Drawn By:	KER, SAD
Checked By:	
Date:	OCTOBER 20, 2000
Scale:	N/A
Disk File:	
Model:	
Address:	7707 E. CENTRAL WICHITA, KANSAS

FRAME & COVER

Drawing No.:
C9

18 03 03 11

1=1.00
\\GVFR_CVR 01-16-2001 02:39:54 pm