STORM WATER SEWER

TO SERVE LOT 1, ASCENSION LUTHERAN CHURCH ADDITION

PRIVATE PROJECT NO. 1089 PPS

OCA #607861

GENERAL NOTES

1. Contractor will be required to provide a minimum advance notice of forty eight (48) hours to utility companies prior to starting any excavation as follows:

   Kansas One-Call 687-2470

   The Contractor must notify the following in case of an emergency:

Cox Communications	262-0661
Kansas Gas Service	383-8600
K.G.E. Electric	383-9600
Peoples Natural Gas Company	1-800-303-0357
Southwestern Bell Telephone Company	1-800-286-8313
City of Wichita Water Department	262-6000
City of Wichita Sewer Maintenance	262-6000

2. The Contractor shall give all property owners and/or tenants of developed property directly abutting the construction of this project a minimum of ten (10) days advance notice prior to start of construction.

3. The Contractor shall be responsible for preserving property irons. The Contractor will be required to re-establish any property irons which are damaged or destroyed by his construction operations. Such irons shall be re-established by a licensed land surveyor in accordance with state laws.

4. This project is to be constructed in accordance with City of Wichita Standard Specifications for the Construction of City Projects, March 1998, and the latest edition of the Policy on Construction of Public Works Projects by Private Contract.

5. Any areas within public right of way which are disturbed by construction of this project shall be restored in accordance with Administrative Regulation AR78.

6. All storm sewer materials and construction to comply with City of Wichita standard specifications.

7. Connection of roof drain to storm sewer requires a permit from City of Wichita.

8. Not more than one lane of traffic on Tyler may be closed at anytime during construction.

APPROVED AS NOTED
BY CITY ENGINEER OF WICHITA

Sanitary Sewers _____

Storm Sewers VRH 2/16/01

Driveway Approaches _____

Water Mains _____

Paving _____

NOTE TO CONTRACTORS

Inspection and testing for this project are to be provided by a Licensed Consulting Engineering Firm under contract with the Owner/Developer. Said Inspection to be in accordance with the City of Wichita standard construction engineering practices and certified by a Licensed Professional Engineer. No work shall be performed in dedicated easements or public right-of-way by the Contractor without such Inspection, nor shall any work be commenced without written authorization by the City Engineer.

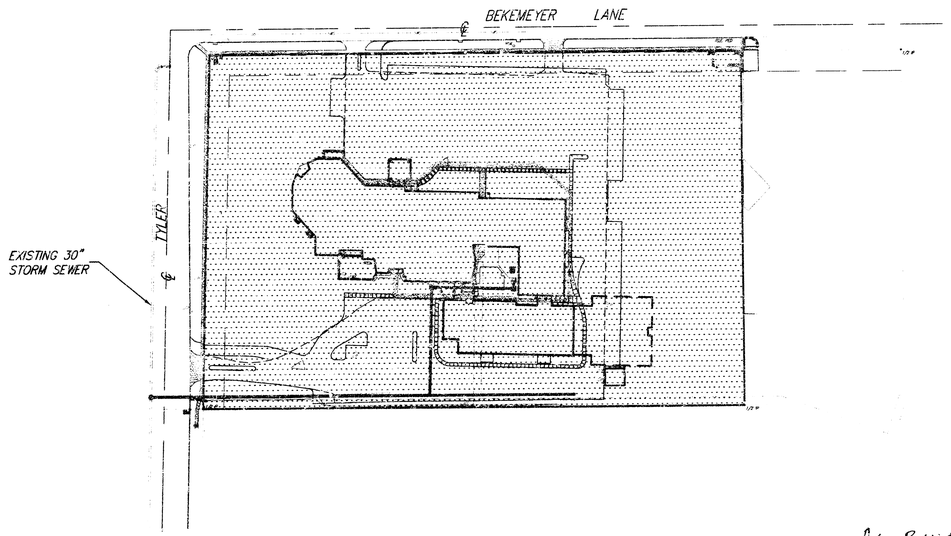

INDEX

1. TITLE SHEET
2. STORM SEWER PLAN/PROFILE
3. SHALLOW TYPE P & C MANHOLE DETAIL

BOOKED 9-26-01 MCG D-520

PROJECT LOCATION

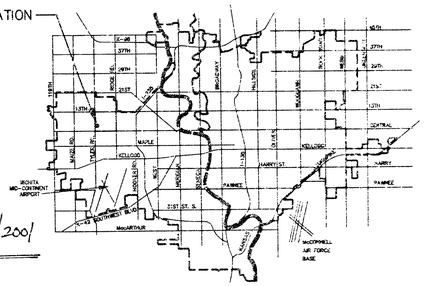

VICINITY MAP

AS-BUILT PLANS 04/23/2001

BUILT PER PLAN REVISIONS 03/20/2001
Inspector: Mike Stump
Inspection firm: Savoy, Ruggles & Bohm
Contractor: McCullough Excavation, Inc

SERVICE AREA

Scale: 1" = 80'

BENCHMARKS

"□" CUT TOP OF CURB AT THE S.W. CORNER OF LOT 1, ASCENSION LUTHERAN CHURCH ADDITION ELEV.=1334.14 (N.G.V.D.)

CITY OF WICHITA, KANSAS

MICHAEL E. LINDEBAK, P.E. - CITY ENGINEER

SRB 924 NORTH MAIN WICHITA, KANSAS 67203 316-264-8008 FAX 264-4621
SAVOY, RUGGLES & BOHM, P.A.
ENGINEERING & SURVEYING

18450

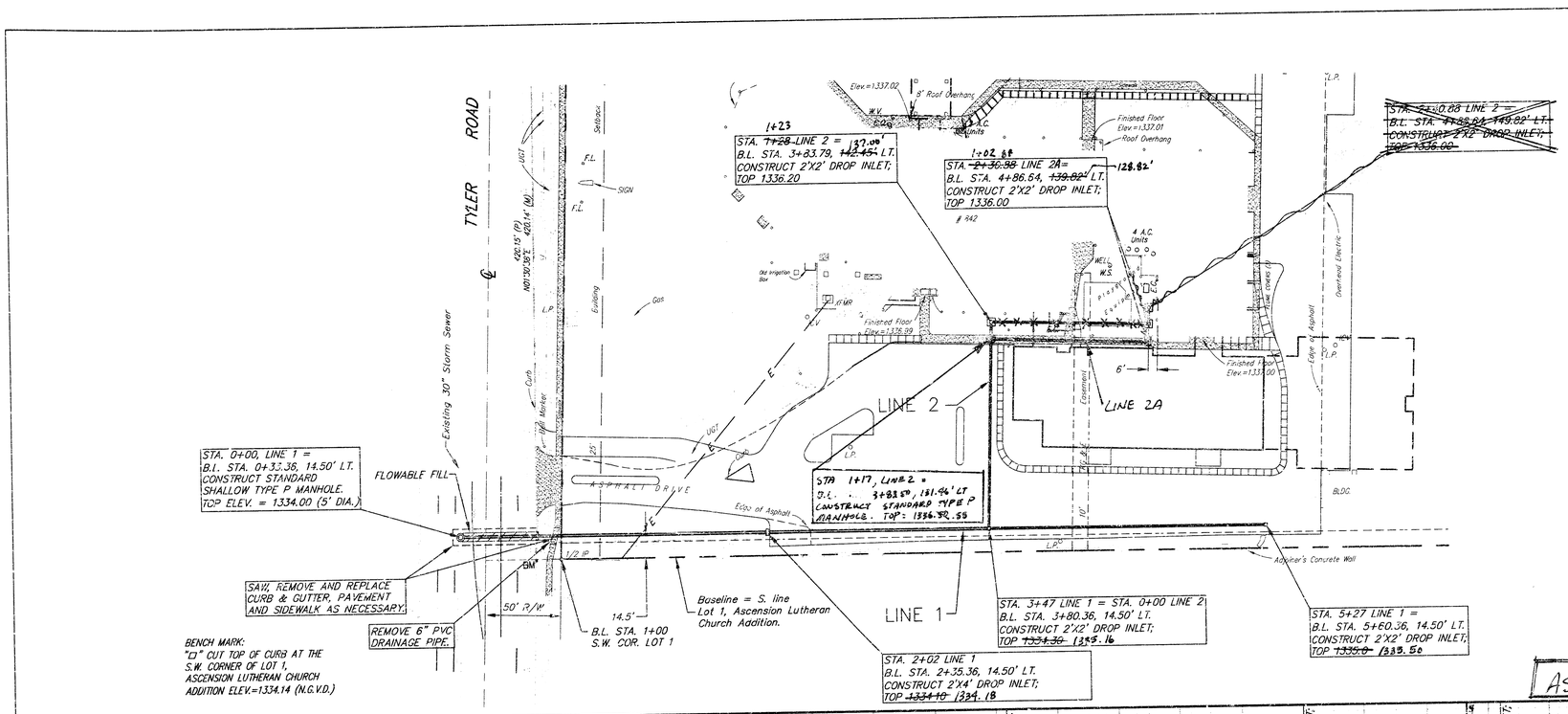

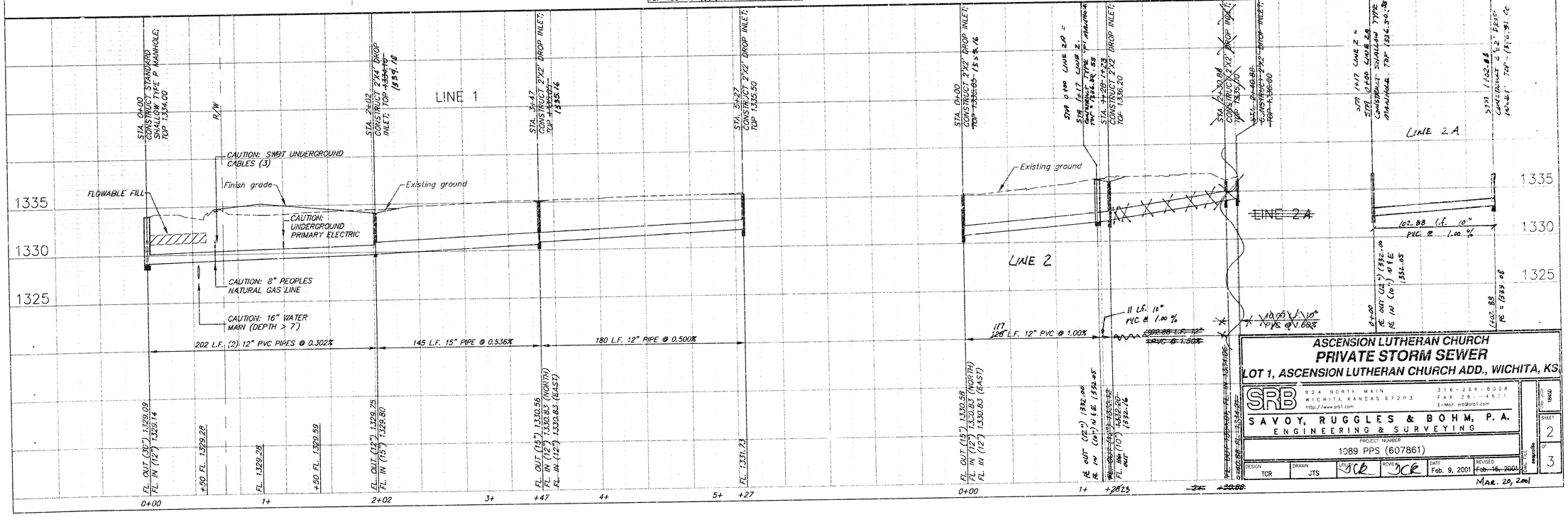

ASCENSION LUTHERAN CHURCH
PRIVATE STORM SEWER
LOT 1, ASCENSION LUTHERAN CHURCH ADD., WICHITA, KS.

SRB
924 NORTH MAIN
WICHITA, KANSAS 67203
316-264-8008
FAX 26--4671
http://www.srb1.com
E-Mail: srb@srb1.com

SAVOY, RUGGLES & BOHM, P. A.
ENGINEERING & SURVEYING

PROJECT NUMBER 1089 PPS (607861)

DESIGN	DRAWN	UTILITY	REVIEW	DATE	REVISED
TCR	JTS	JCR	JCR	Feb. 9, 2001	~~Feb. 16, 2001~~

CIVIL FILE | SHEET NO. 2 | TOTAL SHEETS 3

MAR. 20, 2001

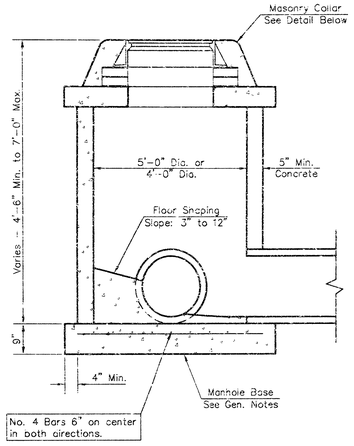

SHALLOW TYPE "P" MANHOLE

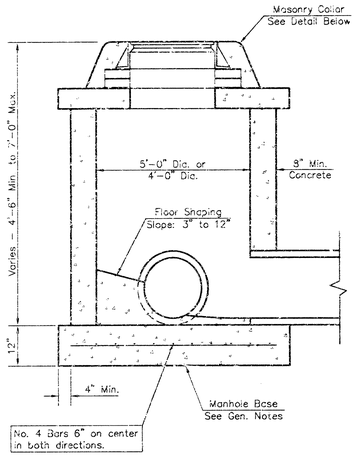

SHALLOW TYPE "C" MANHOLE

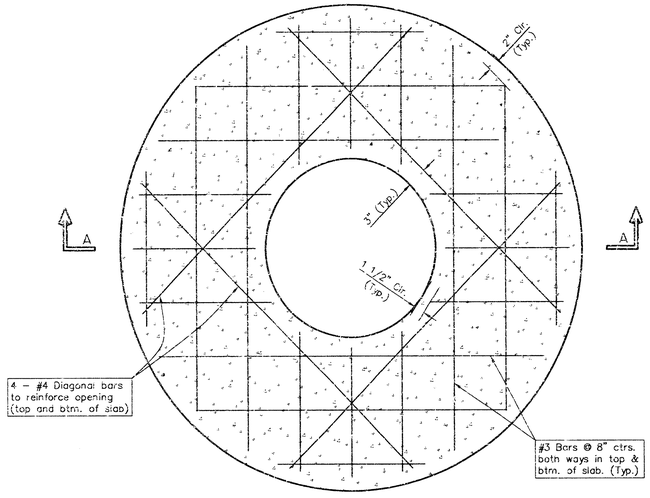

PLAN

GENERAL NOTES

1. Mortar used in masonry construction shall contain 8 sacks of cement per cubic yard. Concrete used in manhole bases shall conform to the requirements of concrete for concrete pavement construction as specified in the city standard paving specifications using city concrete cement mix without air entraining admixture. Mortar shall be placed around the manhole rings as shown on the drawings when manholes are constructed in unpaved areas. Manholes constructed where pipe sizes are smaller than 24" shall have an inside diameter of 4'. Manholes constructed where pipe sizes are 24" or larger shall have an inside diameter of 5'. Completed manhole shall be without leaks and water tight.

2. Reinforcing steel shall be installed in the manhole bases and shall consist of no. 4 bars placed on 5" centers in both directions. The manhole base reinforcement shall be placed 6" above the bottom of the manhole base. All costs for furnishing and installing reinforcing steel shall be included in the unit price bid for the manhole.

3. The floors of all manholes shall be shaped with flow channels such that the manholes will be self cleaning and free of areas where solids could be deposited as sewage flows through the manhole from all inlet pipes to the outlet pipe. Flow channels shall be formed to match the bottom halves of the inflowing pipes and the outflowing pipe as shown by the drawings. Manhole floors shall have slopes of 3 inches per foot in the areas outside of the flow channels sloped toward the flow channels. Pipes laid through manholes shall have the top half removed to neat lines for the full inside diameter of the manhole. Manhole floors shall then be shaped around the bottom half of the pipe which forms the flow channel.

4. Pipes installed within the excavation made for the manhole shall be cradled with concrete to the limits of the manhole excavation. When clay pipe is used, the cradle shall extend to the first joint outside the manhole. The cradle shall be terminated at the clay pipe joint in a manner which will maintain the flexibility of the joint. Cost of cradle within manhole excavation or to clay pipe joints adjacent to manhole shall be included in the unit price bid for the manhole.

5. Manhole cover castings and manhole frame castings shall conform to the requirements as indicated in the standard specifications and as shown in the standard detail drawings.

6. The crowns of inflowing pipes shall never be set lower than the crown of the outflowing pipe.

7. Standard shallow manholes type "P" and "C" shall be paid for at the unit price bid per each for the type and diameter indicated. All standard shallow manhole diameters will be 4' unless indicated otherwise.

8. All brick used in manhole construction shall meet Grade SW of ASTM C652 or C62-87.

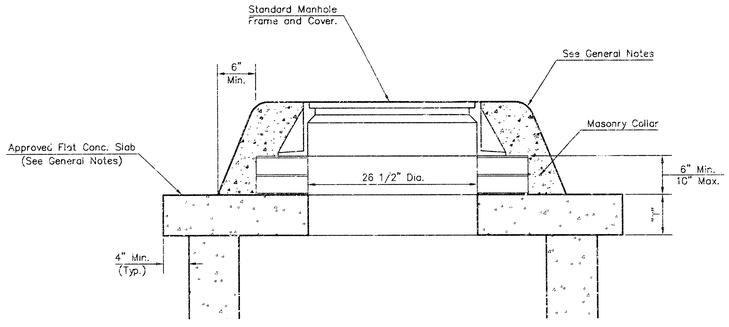

MASONRY COLLAR DETAIL

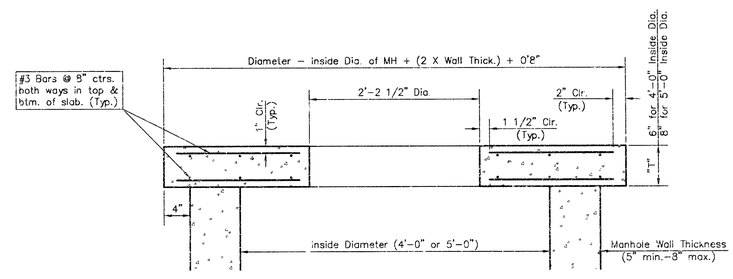

SECTION A-A

FLAT CONCRETE SLAB DETAILS

THE CITY OF WICHITA

CITY ENGINEER'S OFFICE
CITY HALL – SEVENTH FLOOR
455 NORTH MAIN STREET
WICHITA, KANSAS 67202
(316) 268-4501
(316) 268-4114 FAX

SHALLOW MANHOLES
TYPE 'P' AND 'C'

M. E. LINDEBAK P.E. – CITY ENGINEER

PROJECT NUMBER	OCA #
1089 PPS	607861
DATE MAR 96	SHEET 3 OF 3

80 10 11 18