STORM WATER SEWER
TO SERVE
THE S. 250 FEET OF LOT 1, BLOCK A
dePAUL ADDITION

PROJECT NO. : 1097 PPS
OCA #: 607861

GENERAL NOTES

1. Contractor will be required to provide a minimum advance notice of forty-eight (48) hours to utility companies prior to starting any excavation as follows:

   Kansas One-Call 687-2470

2. The Contractor must notify the following in case of an emergency:

Cablevision	262-4270 or 263-2061
Kansas Gas Service	383-8650
K.G.E.	383-8600
Peoples Natural Gas Company	942-8350 or 263-8161
Southwestern Bell Telephone Company	1-571-2611
City of Wichita Water Department	268-4908
City of Wichita Sewer Maintenance	268-4071

3. One lane of traffic on Newell to remain open at all times.

4. Existing utilities and their location, as shown on the plans, represent the best information obtainable for design. Location information has been obtained from the various utility companies and is either from company record drawings or company-provided field locations. The Contractor will be required to work around existing utilities within the right-of-way which do not conflict with proposed construction.

5. The Contractor shall give all property owners and/or tenants of developed property directly abutting the construction of this project a minimum of ten (10) days advance notice prior to start of construction.

6. The Contractor shall be responsible for preserving property irons. The Contractor will be required to re-establish any property irons which are damaged or destroyed by his construction operations. Such irons shall be re-established by a licensed land surveyor in accordance with state laws.

7. The Contractor shall obtain the necessary permits from the Office of Central Inspection prior to any roof drain hook-up to the storm water sewer system.

8. All work on this project to be in accordance with City of Wichita Standard Specifications dated March 1998. Inlet and manhole construction to be according to standard details on file in the Engineering Division of the City of Wichita.

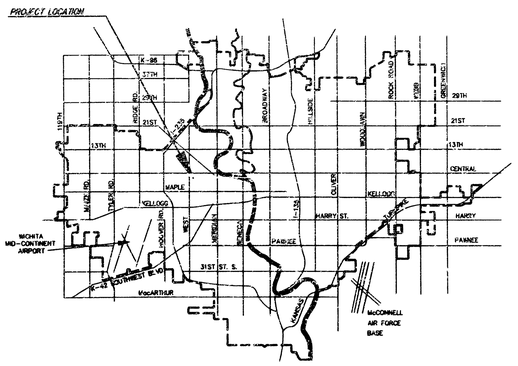

VICINITY MAP

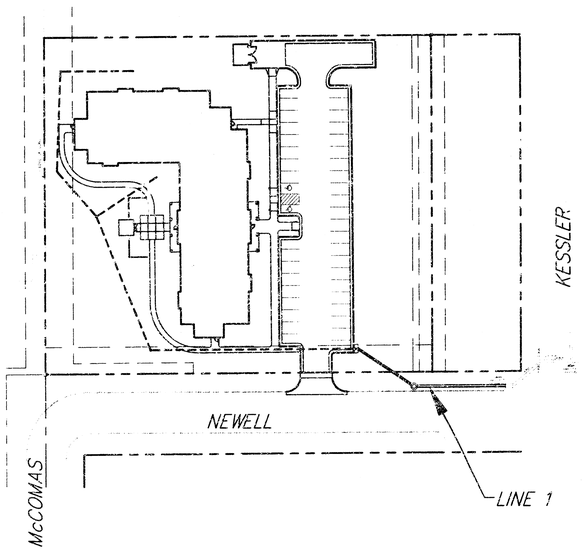



Scale: 1" = 50'

Booked
E-9
1/02/04
RDL

BENCH MARKS:

(CITY DATUM)

B.M. #1 TOP OF IRON PIPE @ SW COR. LOT 1, BLK. A dePAUL ADDITION
ELEVATION=122.98

B.M. #2 TOP OF CHISELED CROSS 236.6' S. OF NW COR. LOT 1, BLK. A dePAUL ADDITION
ELEVATION=121.84

INDEX OF SHEETS

1. TITLE SHEET
2. PLAN & PROFILE
3. SPECIAL SHALLOW MANHOLE DETAIL
4. TYPE 1 CURB INLET

AS-BUILT
12/30/02
Date
Signed

APPROVED AS NOTED
BY CITY ENGINEER OF WICHITA

Storm Sewers VRH 3/26/01

NOTE TO CONTRACTORS

Inspection and testing for this project are to be provided by a Licensed Consulting Engineering Firm under contract with the Owner/Developer. Said inspection to be in accordance with the City of Wichita standard construction engineering practices and certified by a Licensed Professional Engineer. No work shall be performed in dedicated easements or public right-of-way by the Contractor without such inspection, nor shall any work be commenced without written authorization by the City Engineer.

THOMAS DANIEL RUGGLES LICENSED 8321 3-19-01 KANSAS PROFESSIONAL ENGINEER

CITY OF WICHITA, KANSAS
MICHAEL E. LINDEBAK, P.E. - CITY ENGINEER

SRB 924 NORTH MAIN WICHITA, KANSAS 67203 316-264-8008 FAX 264-4621
SAVOY, RUGGLES & BOHM, P.A.
ENGINEERING & SURVEYING

CAUTION!
UNDERGROUND ELECTRIC CABLE.
CONTRACTOR TO ARRANGE WITH
KGE FOR ANY NECESSARY ADJUSTMENT.

NEWELL

KESSLER

LINE 1

10.75'

14.11'

17.50'

30ft

Baseline = S. line dePaul Addition

BASELINE STA. 1+00 =
SE COR. LOT 1, dePAUL
ADDITION

20' Building Setback

8" DRAIN SYSTEM
(NOT PART OF
PROJ# ——— PPS)

30' Utility Easement

15' Landscape Buffer

STA. 0+00 LINE 1
BL STA. 0+39.19, 10.75' LT.
CONNECT TO EXISTING INLET

STA. 0+75 LINE 1
BL STA. 1+14.19, 10.75' LT.
CONST. SPEC. SHALLOW
TYPE "P" MANHOLE
TOP ELEV. 120.40

STA. 1+27.90 LINE 1
BL STA. 1+54.91, 17.50' RT.
CONST. TYPE 1 CURB INLET
TOP ELEV. 119.40
8" PVC STUB WEST

SRB

Scale: PLAN
1" = 20'
PROFILE
1" = 20' Horiz.
1" = 5' Vert.

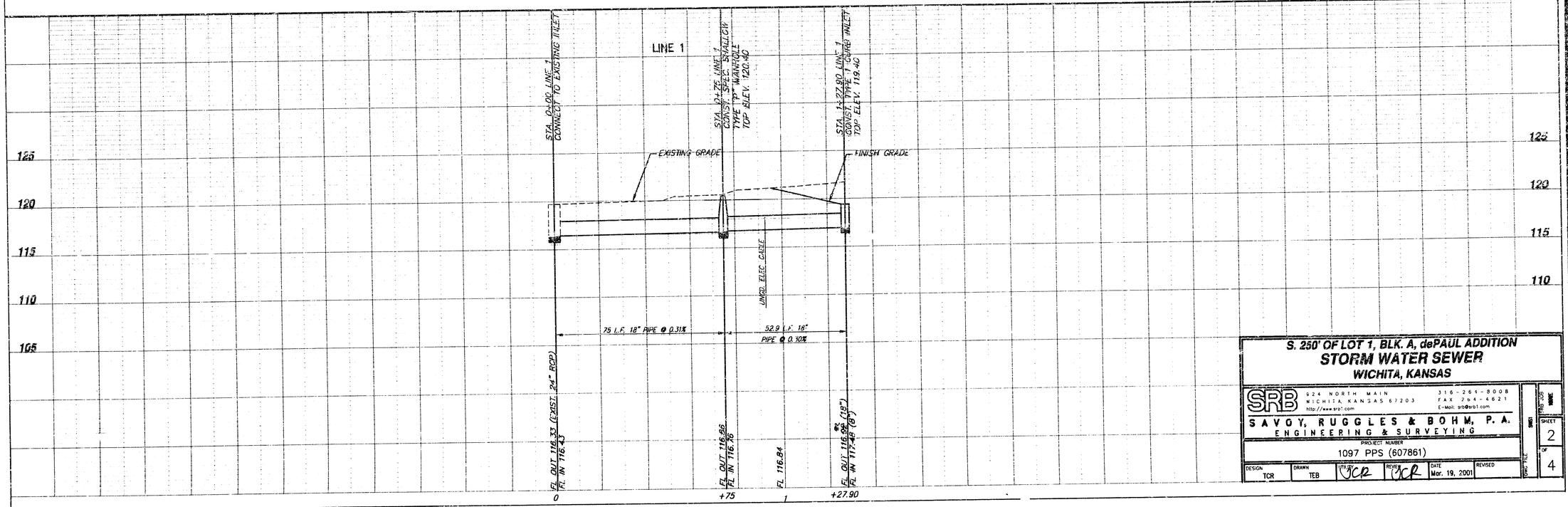

S. 250' OF LOT 1, BLK. A, dePAUL ADDITION
STORM WATER SEWER
WICHITA, KANSAS

SRB
924 NORTH MAIN
WICHITA, KANSAS 67203
http://www.srb1.com
316-264-8008
FAX 264-4621
E-Mail: srb@srb1.com
SAVOY, RUGGLES & BOHM, P. A.
ENGINEERING & SURVEYING

PROJECT NUMBER
1097 PPS (607861)

DESIGN	DRAWN	UTILITY	REVIEW	DATE	REVISED
TCR	TEB	JCR	JCR	Mar. 19, 2001	

DRAWING FILE: SRB

SHEET 2 OF 4

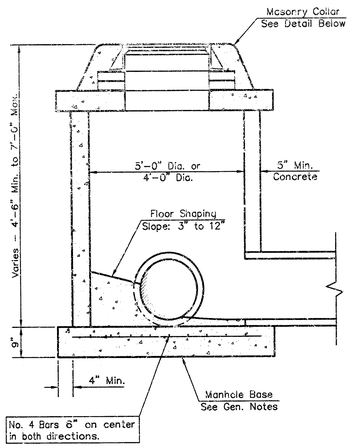

SHALLOW TYPE "P" MANHOLE

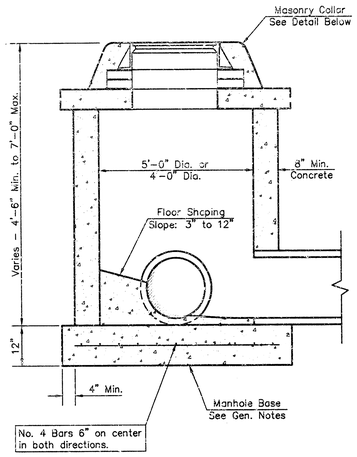

SHALLOW TYPE "C" MANHOLE

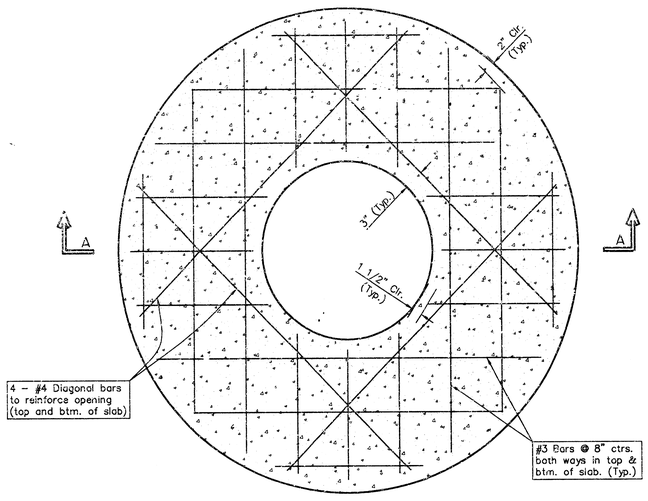

PLAN

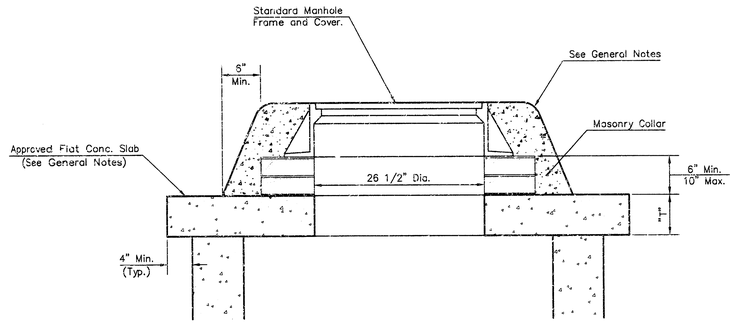

MASONRY COLLAR DETAIL

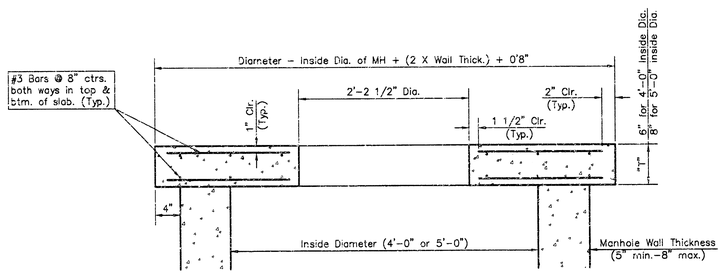

SECTION A-A

FLAT CONCRETE SLAB DETAILS

GENERAL NOTES

1. Mortar used in masonry construction shall contain 8 sacks of cement per cubic yard. Concrete used in manhole bases shall conform to the requirements of concrete for concrete pavement construction as specified in the city standard paving specifications using city concrete cement mix without air entraining admixture. Mortar shall be placed around the manhole ring as shown on the drawings when manholes are constructed in unpaved areas. Manholes constructed where pipe sizes are smaller than 24" shall have an inside diameter of 4'. Manholes constructed where pipe sizes are 24" or larger shall have an inside diameter of 5'. Completed mannole shall be without leaks and water tight.

2. Reinforcing steel shall be installed in the manhole bases and shall consist of no. 4 bars placed on 6" centers in both directions. The manhole base reinforcement shall be placed 6" above the bottom of the manhole base. All costs for furnishing and installing reinforcing steel shall be included in the unit price bid for the manhole.

3. The floors of all manholes shall be shaped with flow channels such that the manholes will be self cleaning and free of areas where solids could be deposited as sewage flows through the manhole from all inlet pipes to the outlet pipe. Flow channels shall be formed to match the bottom halves of the inflowing pipes and the outflowing pipe as shown by the drawings. Manhole floors shall have slopes of 3 inches per foot in the areas outside of the flow channels sloped toward the flow channels. Pipes laid through mannoles shall have the top half removed to neat lines for the full inside diameter of the manhole. Manhole floors shall then be shaped around the bottom half of the pipe which forms the flow channel.

4. Pipes installed within the excavation made for the manhole shall be cradled with concrete to the limits of the manhole excavation. When clay pipe is used, the cradle shall extend to the first joint outside the manhole. The cradle shall be terminated at the clay pipe joint in a manner which will maintain the flexibility of the joint. Cost of cradle within manhole excavation or to clay pipe joints adjacent to manhole shall be included in the unit price bid for the manhole.

5. Manhole cover castings and manhole frame castings shall conform to the requirements as indicated in the standard specifications and as shown in the standard detail drawings.

6. The crowns of inflowing pipes shall never be set lower than the crown of the outflowing pipe.

7. Standard shallow manholes type "P" and "C" shall be paid for at the unit price bid per each for the type and diameter indicated. All standard shallow manhole diameters will be 4' unless indicated otherwise.

8. All brick used in manhole construction shall meet Grade SW of ASTM C652 or C62-87.

THE CITY OF WICHITA
CITY ENGINEER'S OFFICE
CITY HALL – SEVENTH FLOOR
455 NORTH MAIN STREET
WICHITA, KANSAS 67202
(316) 268-4501
(316) 268-4114 FAX

SHALLOW MANHOLES TYPE 'P' AND 'C'

M. E. LINDEBAK P.E. – CITY ENGINEER

PROJECT NUMBER	OCA #
1097 PPS	607861

DATE	SHEET
MAR 96	SHEET 3 OF 4

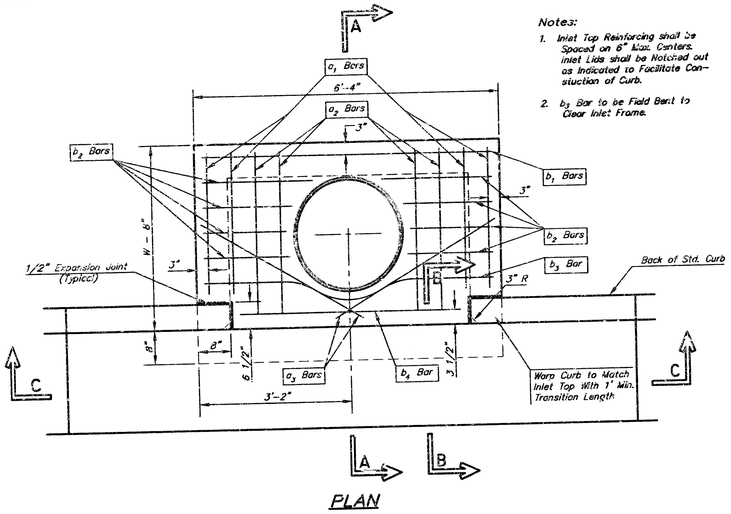

PLAN

Notes:

1. Inlet Top Reinforcing shall be Spaced on 6" Max. Centers. Inlet Lids shall be Notched out as Indicated to Facilitate Construction of Curb.
2. b_3 Bar to be Field Bent to Clear Inlet Frame.

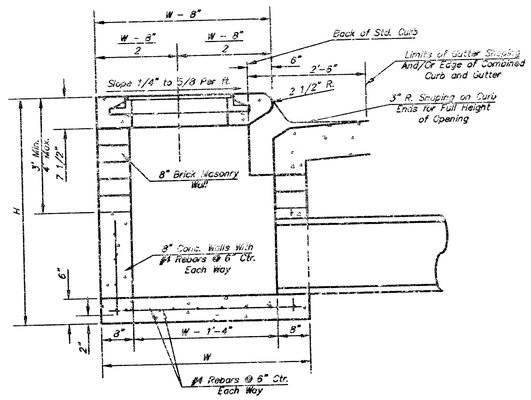

SECTION A-A

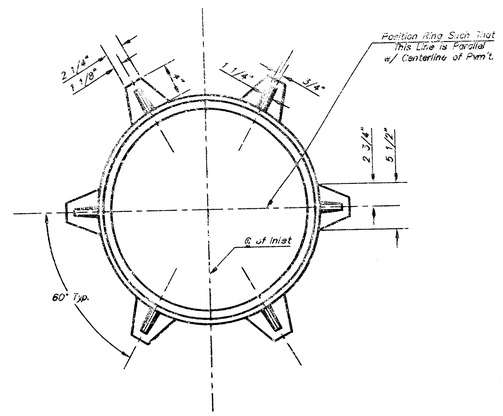

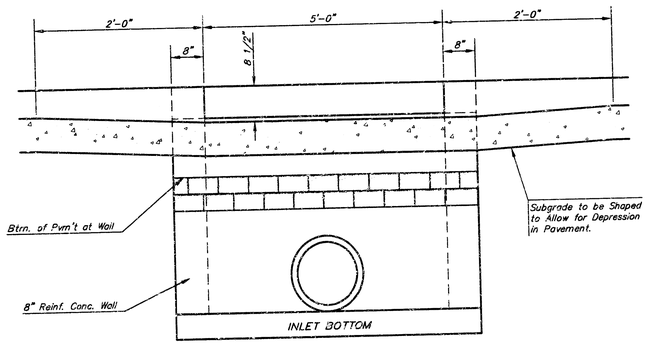

SECTION C-C

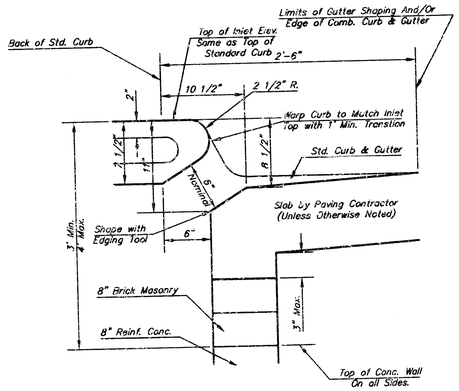

SECTION B-B

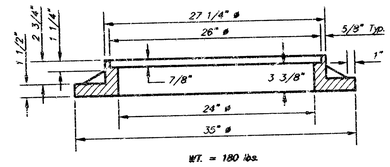

WT. = 180 lbs.

MANHOLE RING AND COVER

*See City of Wichita Standard Manhole Ring and Cover Detail Sheet for Cover Details to Be Used with Inlet Frame.

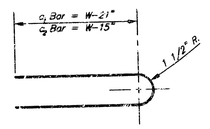

BENDING DIAGRAM

STEEL SCHEDULE

BAR	a_1	a_2	a_3	b_1 W=4'-4"	b_1 W=5'-4"	b_1 W=6'-4"	b_1 W=7'-4"	b_1 W=8'-4"	b_2	b_3	b_4	Wt. Lbs.
NUMBER	4	4	2	1	3	5	7	9	6	1	1	
SIZE	#4	#4	#4	#4	#4	#4	#4	#4	#4	#4	#6	
LENGTH W=4'-4"	5'-7"	6'-7"	4'-0"	6'-1"	–	–	–	–	1'-9"	6'-2"	4'-8"	60±
LENGTH W=5'-4"	7'-7"	8'-7"	5'-0"	–	6'-1"	–	–	–	1'-9"	6'-2"	4'-8"	81±
LENGTH W=6'-4"	9'-7"	10'-7"	6'-0"	–	–	6'-1"	–	–	1'-9"	6'-2"	4'-8"	101±
LENGTH W=7'-4"	11'-7"	12'-7"	7'-0"	–	–	–	6'-1"	–	1'-9"	6'-2"	4'-8"	121±
LENGTH W=8'-4"	13'-7"	14'-7"	8'-0"	–	–	–	–	6'-1"	1'-9"	6'-2"	4'-8"	141±

Note: a_3 Bars to be Placed Approx. 2" Below Top of Inlet Cover.

STANDARD CURB INLET PRECAST TOPS			
W	PRE-CAST TOP SIZE	PIPE SIZE	CU. YD. CONC.
4'-4"	3'-8" 6'-4" 7 1/2"	21" & SMALLER	0.38±
5'-4"	4'-8" 6'-4" 7 1/2"	24" & 30"	0.51±
6'-4"	5'-8" 6'-4" 7 1/2"	36" & 42"	0.64±
7'-4"	6'-8" 6'-4" 7 1/2"	48" & 54"	0.77±
8'-4"	7'-8" 6'-4" 7 1/2"	60" & 66"	0.90±

GENERAL NOTES

1. Concrete tops to be installed on thin mortar cushion to insure full support along brick walls. Concrete tops may be cast in place or precast. Concrete used for inlet construction shall be concrete pavement mix.
2. Contractor shall have the option of constructing 8" brick masonry walls between the concrete inlet base and top on this inlet when W=6'-4" and H=7'-0" or less.
3. Inlet invert shall be shaped with a sack sand mix concrete to create flow channels and to increase hydraulic efficiency such that the inlet will be self cleaning between all inlet and/or outlet pipes.
4. The ends of all pipes installed in inlets shall be cut off flush with the inside face of the inlet wall.

THE CITY OF WICHITA

CITY ENGINEER'S OFFICE
CITY HALL - SEVENTH FLOOR
455 NORTH MAIN STREET
WICHITA, KANSAS 67202
(316) 268-4351
(316) 268-4174 FAX

STANDARD TYPE CURB INLET OPENING = 6"x5'

M. E. LINDEBAK P.E. – CITY

PROJECT NUMBER	
1097 PPS	607
DATE MAR 96	SHEET 4