FILE COPY

STORM WATER SEWER IMPROVEMENTS

to serve

RIDGE PORT NORTH 2ND ADDITION

CITY OF WICHITA, KANSAS

Michael E. Lindebak, P.E. City Engineer

Private Project Number

1103 PPS (607861)

GENERAL NOTES:

1. Contractor will be required to provide notice to utility companies a minimum of twenty-four (24) hours prior to any excavation, as follows:

   Kansas One-Call 697-2470

   The Contractor must notify the following in case of an emergency:

Multimedia Cablevision	262-0661
K.G.E. Electric Service	383-8650
Kansas Gas Service	383-8600
Peoples Gas Company	942-9350
Southwestern Bell Telephone Company	1-511-2611
City of Wichita Water Dept.	268-4908
City of Wichita Traffic Engineering	269-4446

2. Underground utility service lines and overhead utility pole lines are to be adjusted as necessary by others prior to construction unless the plans specifically call for their adjustment by the Contractor or unless the plans specifically identify a utility to be adjusted by its owner during construction. Existing utilities and their location, as shown on the plans, represent the best information obtainable for design. The Contractor will be required to work around existing utilities within the right-of-way which do not conflict with proposed construction.

3. Trees and shrubs in public right-of-way which are in direct conflict with proposed new construction shall be removed by the Contractor with the Engineer's approval. Trees and shrubs which are not in direct conflict with proposed new construction shall be saved and protected from damage.

4. The Contractor shall give all property owners and/or tenants of developed property abutting the construction of this project a minimum of ten (10) days advance notice prior to start of construction.

5. The Contractor shall be responsible for preserving property irons. The Contractor will be required to re-establish any property irons which are damaged or destroyed by his construction operations. Such irons shall be re-established by a licensed land surveyor in accordance with state laws.

6. When connecting to existing manhole or stub, the contractor shall reshape manhole bottom or adjust the existing stub's alignment or elevation as necessary. Cost shall be subsidiary to project.

7. Contractor shall grade around exposed manholes & inlets at a 1:1 slope. Manholes & inlets set lower than existing grade shall have 9" berm constructed around manhole or inlet to prevent infiltration into storm sewer system. Cost of dirt, labor, equipment, etc. to be incidental to cost of manhole or inlet.

8. The Contractor shall not start work on the project until the Project Inspector is assigned to the project and is present on the sight. Any work done without inspection will be required to be uncovered for inspection.

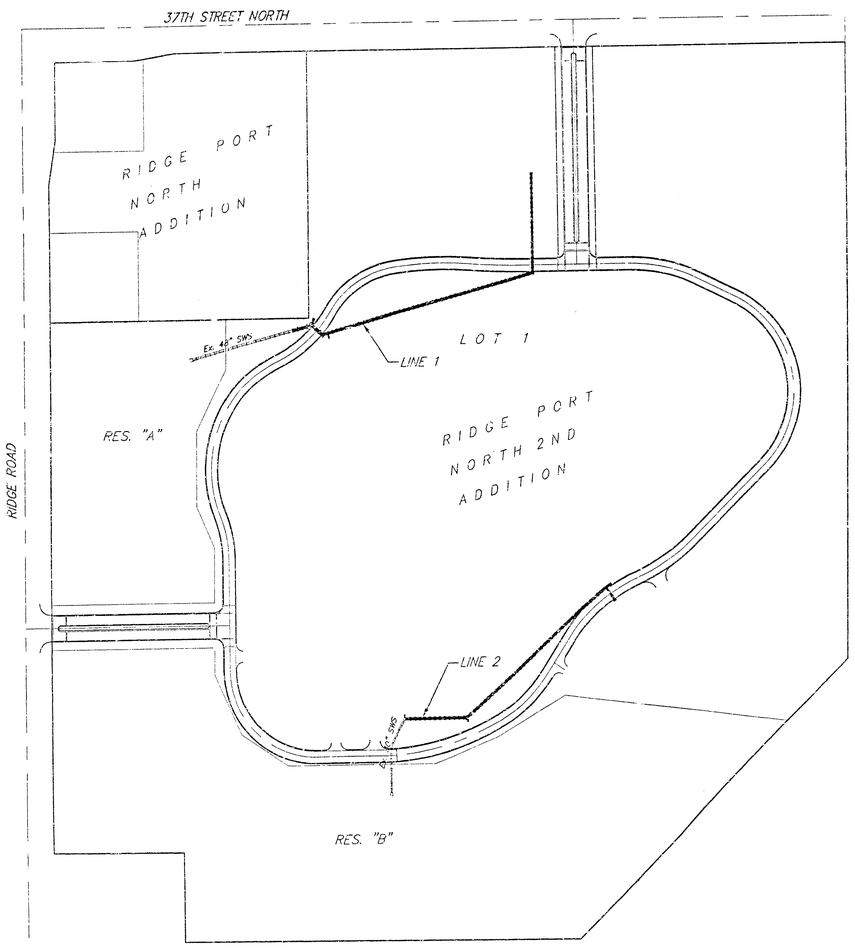

Scale: 1" = 150'

APPROVED AS NOTED
BY CITY ENGINEER OF WICHITA

Storm Sewers VRH 4/2/01

NOTE TO CONTRACTORS

Installation, inspection and testing for this project is to be provided by a Licensed Consulting Engineering Firm under contract with the Owner/Developer. Said inspection to be in accordance with the City of Wichita standard construction engineering practices and certified by a Licensed Professional Engineer. No work shall be performed in dedicated easements or public right-of-way by the Contractor without such inspection nor shall any work be commenced without written authorization by the City Engineer. All Construction and Materials shall comply with the City of Wichita Specifications and Standards (on file and available in the City Engineer's Office).

Sheet Index

Title Sheet	1
Line 1	2-3
Line 2	4
Standard Type 1 Inlet Detail	5
Standard Manhole Detail	6
Ring & Cover Detail	7
Copy of Plat	8

Benchmark

City Disk - SW corner of Ridge Road & 29th St. N., 80.8' S & 63.7' W of ℄ both.
Elev. = 1139.15 (City Datum)

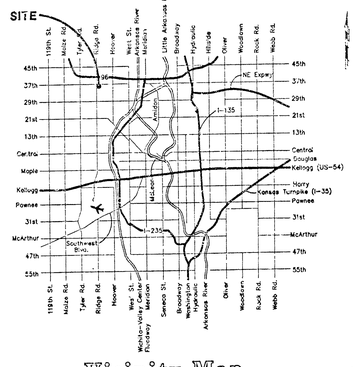

Vicinity Map



As Built 8/01 KK

APRIL 2001 ViochristNW\SSCov

BAUGHMAN COMPANY P.A.
ENGINEERING, SURVEYING, & PLANNING
316-262-7271 • 315 ELLIS • WICHITA, KANSAS 67211

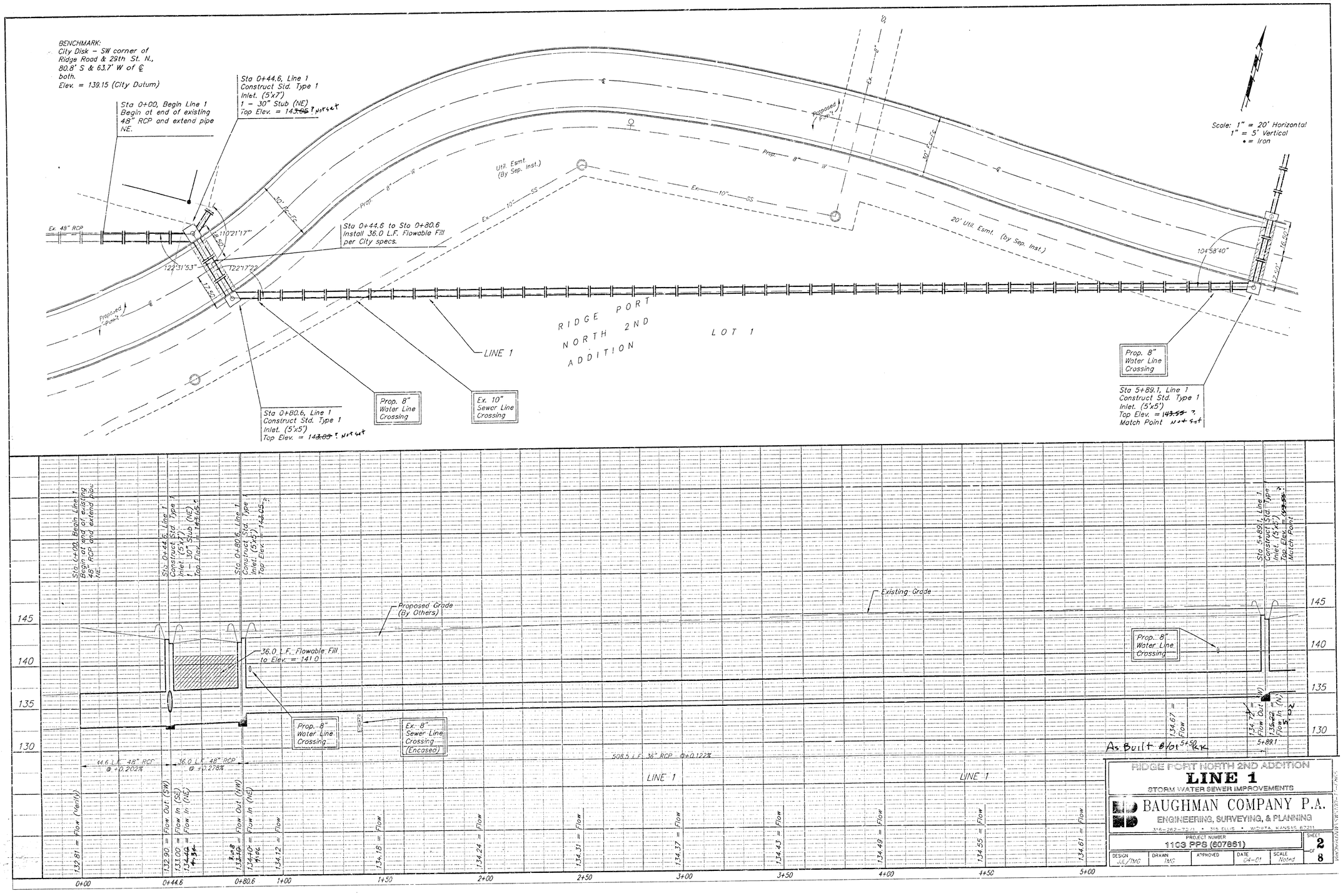

RIDGE PORT NORTH 2ND ADDITION

LINE 1

STORM WATER SEWER IMPROVEMENTS

BAUGHMAN COMPANY P.A.

ENGINEERING, SURVEYING, & PLANNING

316-262-7271 • 315 ELLIS • WICHITA, KANSAS 67211

PROJECT NUMBER					SHEET
1103 PPS (607861)					2 OF 8
DESIGN JJL/TMG	DRAWN TMG	APPROVED	DATE 04-01	SCALE Noted	

BENCHMARK:
City Disk – SW corner of
Ridge Road & 29th St. N.,
80.8' S & 63.7' W of ℄
both.
Elev. = 139.15 (City Datum)

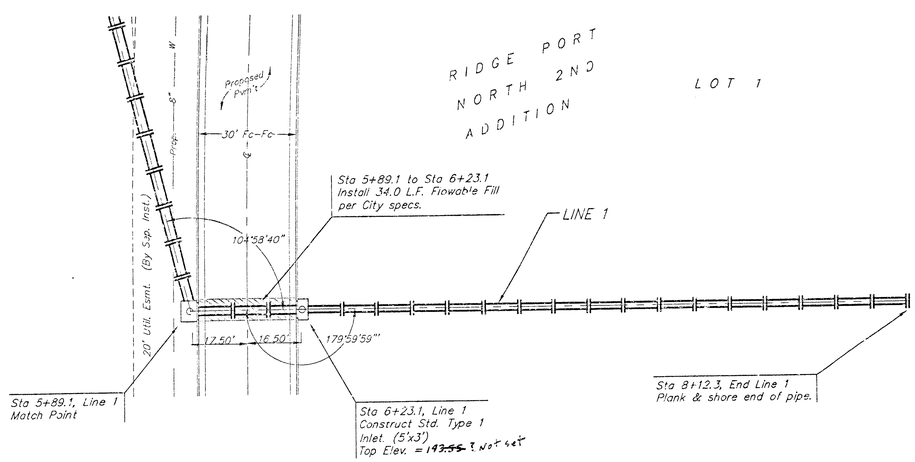

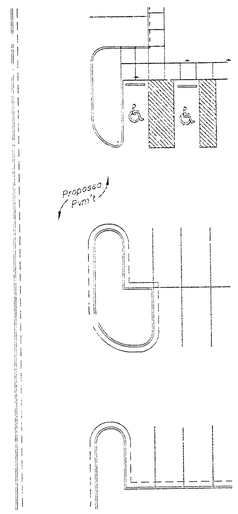

Scale: 1" = 20' Horizontal
1" = 5' Vertical
* = Iron

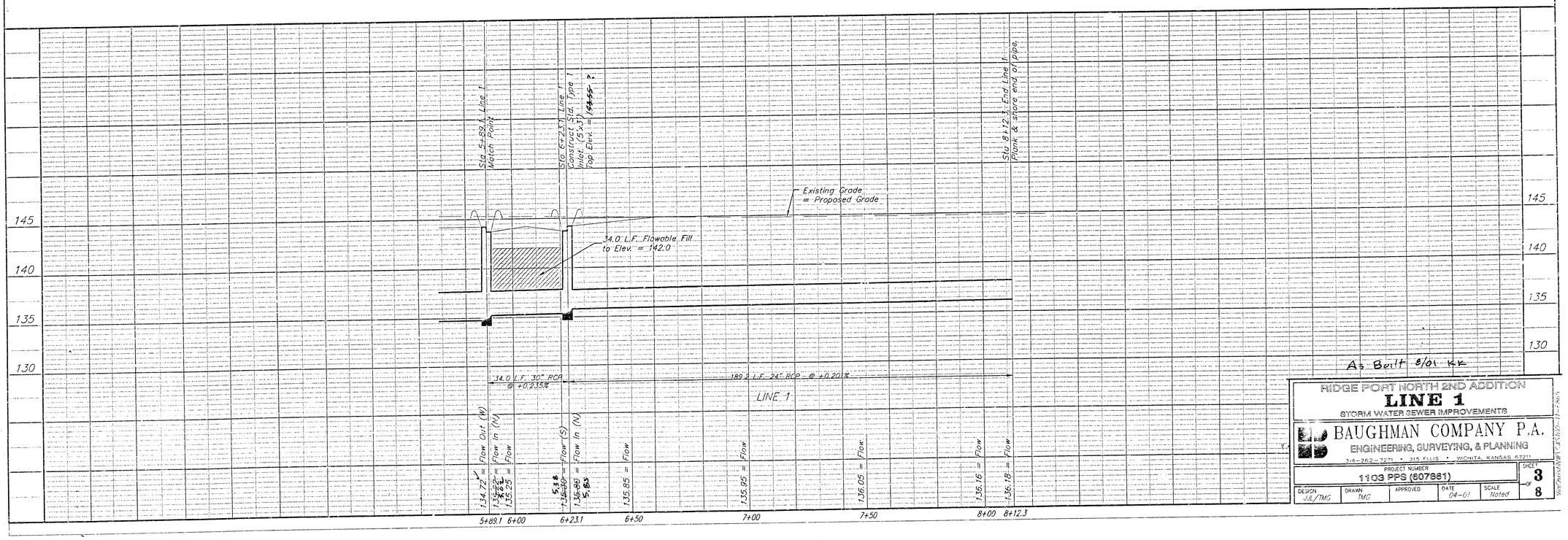

As Built 8/01 KK

RIDGE PORT NORTH 2ND ADDITION
LINE 1
STORM WATER SEWER IMPROVEMENTS

BAUGHMAN COMPANY P.A.
ENGINEERING, SURVEYING, & PLANNING
316-262-7271 • 115 ELLIS • WICHITA, KANSAS 67211

PROJECT NUMBER 1103 PPS (607861)

DESIGN	DRAWN	APPROVED	DATE	SCALE	SHEET
JJL/TMG	TMG		04-01	Noted	3 OF 8

V:\07PROJ\607861\CAD\607861-11-1.DGN

Sta 0+00, Begin Line 2
Remove existing 24" Stub in manhole, core new hole, extend pipe east, seal & grout around pipe, and reshape invert if necessary. Cost of coring, sealing, grouting, and reshaping to be incidental to "Site Clearing & Restoration".

Contractor to grade at 1:1 slope around manholes & inlets. Cost of dirt, labor, equipment, etc. to be incidental to cost of manhole or inlet.

Proposed Grade (By Others)

Existing Grade

Berming Detail
Not to Scale

Sta 1+41.6, Line 2
Construct standard manhole (5' Dia.)
Rim Elev. = 14~~1.98~~ 4.79

Sta 5+74.5, Line 2
Construct Std. Type 1 Inlet. (5'x4')
1 – 30" Stub (NE)
Top Elev. = 14~~2.50~~ ?
Not Set

Sta 5+74.5 to Sta 6+08.0
Install 33.5 L.F. Flowable Fill per City specs.

Scale: 1" = 20' Horizontal
1" = 5' Vertical
• = Iron

RIDGE PORT NORTH 2ND ADDITION

LOT 1

Proposed 8" Water Crossing

CAUTION! Ex. 8" SS Crossing

LINE 2

Ex. 10" SS

Prop. 8" W

Ex. 30" RCP

Ex. 10" RCP Road Drain

Ex. 24" RCP

1:1

1:1

1:6"23"

139°38'38"

141.29'

83°56'5"

87°1'38"

16.50'

30' Easement

Proposed Pvmt

4' Walk

Sta 6+08.0, End Line 2
Construct Std. Type 1 Inlet. (5'x3')
Top Elev. = 14~~2.50~~ ?
Not Set

Prop. 8" Sewer Line Crossing (Encased)

Existing Grade

Proposed 8" Water Crossing

33.5 L.F. Flowable Fill to Elev. = 140.5

Proposed Grade (By Others)

Sta 1+41.6, Line 2
Construct standard manhole (5' Dia.)
Rim Elev. = 14~~1.98~~ 4.79

Sta 5+74.5, Line 2
Construct Std. Type 1 Inlet. (5'x4')
1 – 30" Stub (NE)
Top Elev. = 14~~2.50~~ ?

Sta 6+08.0, End Line 2
Construct Std. Type 1 Inlet. (5'x3')
Top Elev. = 14~~2.50~~ ?

Sta 0+00, Begin Line 2	Remove existing 24" Stub in manhole, core new hole, extend pipe east, seal & grout around pipe, and reshape invert if necessary. Cost of coring, sealing, grouting, and reshaping to be incidental to "Site Clearing & Restoration".	Sta 1+41.6, Line 2 Construct standard manhole (5' Dia.) Rim Elev. = 14~~1.98~~ 4.79	Sta 5+74.5, Line 2 Construct Std. Type 1 Inlet. (5'x4') 1 – 30" Stub (NE) Top Elev. = 14~~2.50~~ ?	Sta 6+08.0, End Line 2 Construct Std. Type 1 Inlet. (5'x3') Top Elev. = 14~~2.50~~ ?
132.74 = Flow Out (SW)	132.84 = Flow In (E)	132.96 = Flow In (NW)	133.97 = Flow In (W)	

151.6 L.F. 30" RCP @ +0.184%

432.9 L.F. 30" RCP @ +0.277%

LINE 2

Existing Grade

Proposed Grade (By Others)

Prop. 8" Sewer Line Crossing (Encased)

Proposed 8" Water Crossing

33.5 L.F. Flowable Fill to Elev. = 140.5

As Built 8/01 KK

| | | |

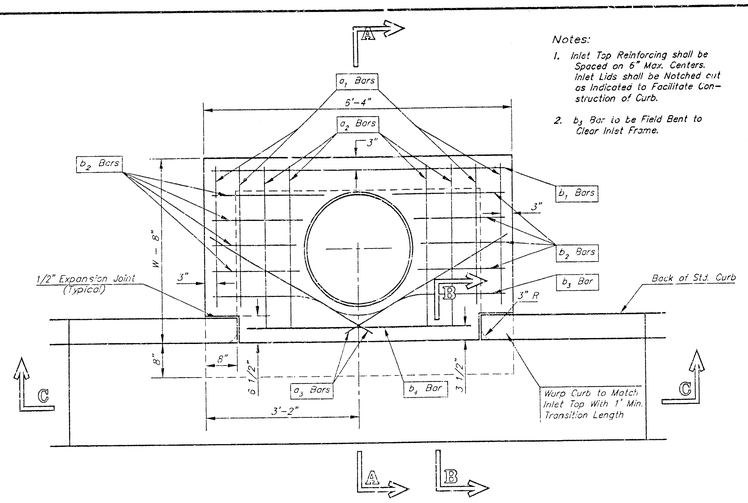

PLAN

Notes:

1. Inlet Top Reinforcing shall be Spaced on 6" Max. Centers. Inlet Lids shall be Notched out as Indicated to Facilitate Construction of Curb.
2. b_4 Bar is to be Field Bent to Clear Inlet Frame.

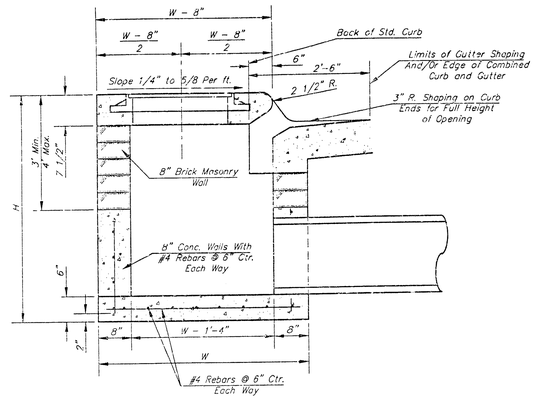

SECTION A-A

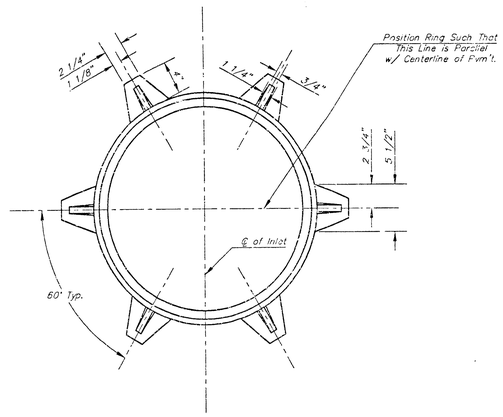

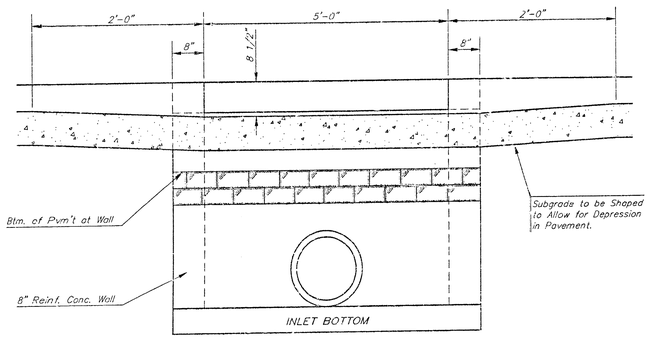

SECTION C-C

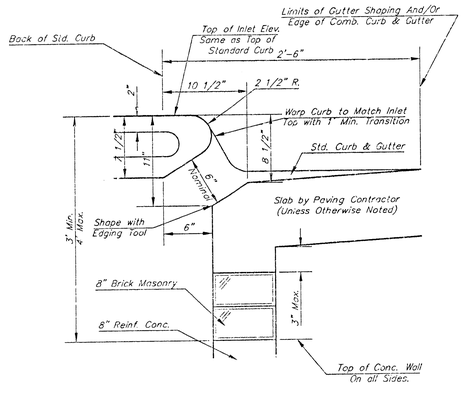

SECTION B-B

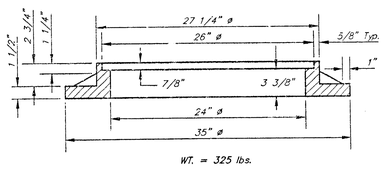

Wt. = 325 lbs.

MANHOLE RING AND COVER

*See City of Wichita Standard Manhole Ring and Cover Detail Sheet for Cover Details to Be Used With Inlet Frame.

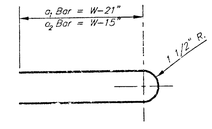

BENDING DIAGRAM

STEEL SCHEDULE

BAR		a_1	a_2	a_3	b_1 W=4'-4"	b_1 W=5'-4"	b_1 W=6'-4"	b_1 W=7'-4"	b_1 W=8'-4"	b_2	b_3	b_4	Wt. Lbs.
NUMBER		4	4	2	1	3	5	7	9	6	1	1	
SIZE		#4	#4	#4	#4	#4	#4	#4	#4	#4	#4	#6	
LENGTH	W=4'-4"	5'-7"	6'-7"	4'-0"	5'-1"	–	–	–	–	1'-9"	6'-2"	4'-8"	60±
	W=5'-4"	7'-7"	8'-7"	5'-0"	–	6'-1"	–	–	–	1'-9"	6'-2"	4'-8"	81±
	W=6'-4"	9'-7"	10'-7"	6'-0"	–	–	6'-1"	–	–	1'-9"	6'-2"	4'-8"	101±
	W=7'-4"	11'-7"	12'-7"	7'-0"	–	–	–	6'-1"	–	1'-9"	6'-2"	4'-8"	121±
	W=8'-4"	13'-7"	14'-7"	8'-0"	–	–	–	–	6'-1"	1'-9"	6'-2"	4'-8"	141±

Note: a_3 Bars to be Placed Approx. 2" Below Top of Inlet Cover.

STANDARD CURB INLET PRECAST TOPS

W	PRE-CAST TOP SIZE	PIPE SIZE	CU. YD. CONC.
4'-4"	3'-8" 6'-4" 7 1/2"	21" & SMALLER	0.38±
5'-4"	4'-8" 6'-4" 7 1/2"	24" & 30"	0.51±
6'-4"	5'-8" 6'-4" 7 1/2"	36" & 42"	0.64±
7'-4"	6'-8" 6'-4" 7 1/2"	48" & 54"	0.77±
8'-4"	7'-8" 6'-4" 7 1/2"	60" & 66"	0.90±

GENERAL NOTES

1. Concrete tops to be installed on thin mortar cushion to insure full support along brick walls. Concrete tops may be cast in place or precast. Concrete used for inlet construction shall be concrete pavement mix.
2. Contractor shall have the option of constructing 8" brick masonry walls between the concrete inlet base and top on this inlet when W=6'-4" and H=7'-0" or less.
3. Inlet invert shall be shaped with 8 sack sand mix concrete to create flow channels and to increase hydraulic efficiency such that the inlet will be self cleaning between all inlet and/or outlet pipes.
4. The ends of all pipes installed in inlets shall be cut off flush with the inside face of the inlet wall.

Revised - Dec. 21, 1984

CITY OF WICHITA, KANSAS

TYPE 1 CURB INLET

INLET OPENING = 8'X5'-0"

BAUGHMAN COMPANY P.A.
ENGINEERING, SURVEYING, & PLANNING
316-262-7271 • 315 ELLIS • WICHITA, KANSAS 67211

PROJECT NUMBER					SHEET
1103 PPS (607861)					5 OF 8
DESIGN C.O.W.	DRAWN STAFF	APPROVED	DATE 04-01	SCALE NONE	

WICHITA/DWG/Std/Feb-17-1985

SEWER APPURTENANCES DETAILS

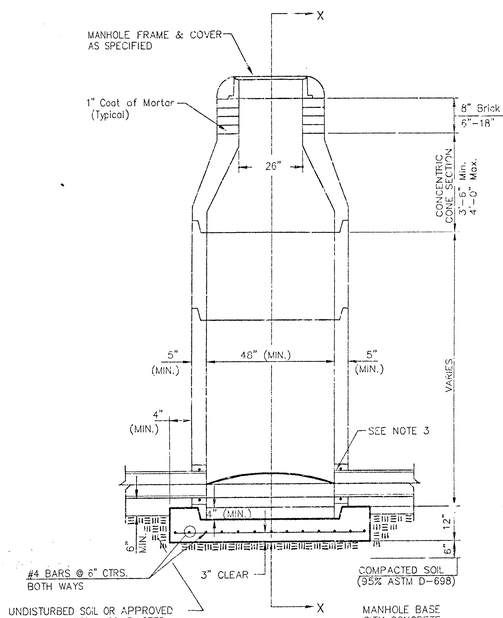

TYPE P STANDARD MANHOLE

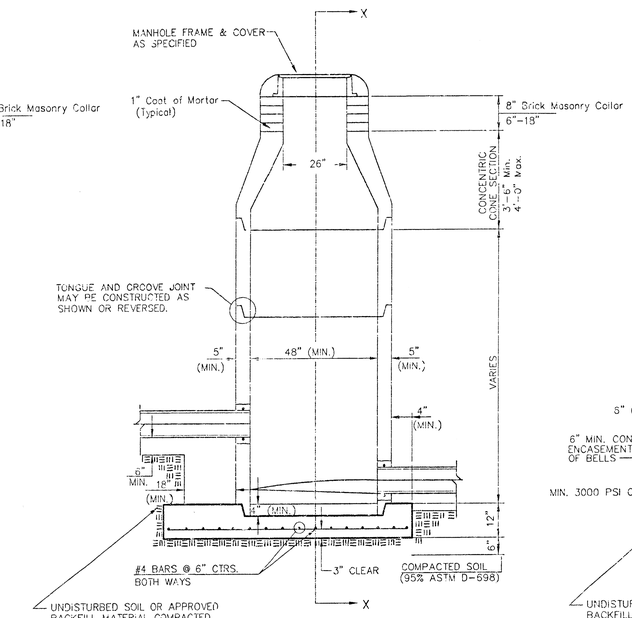

TYPE P INSIDE DROP MANHOLE

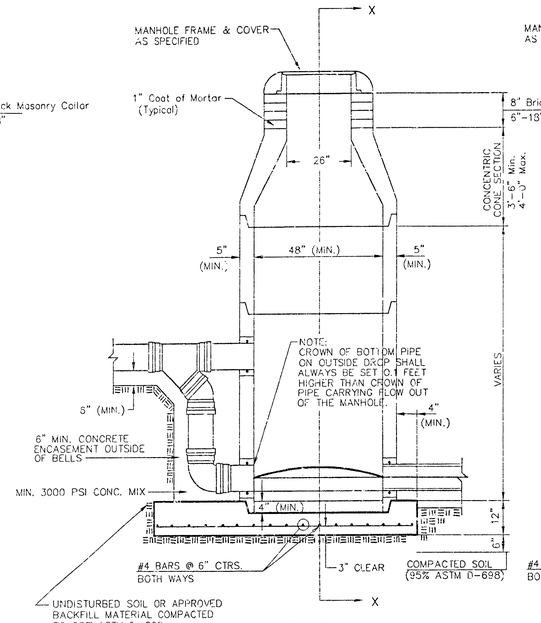

TYPE P OUTSIDE DROP MANHOLE

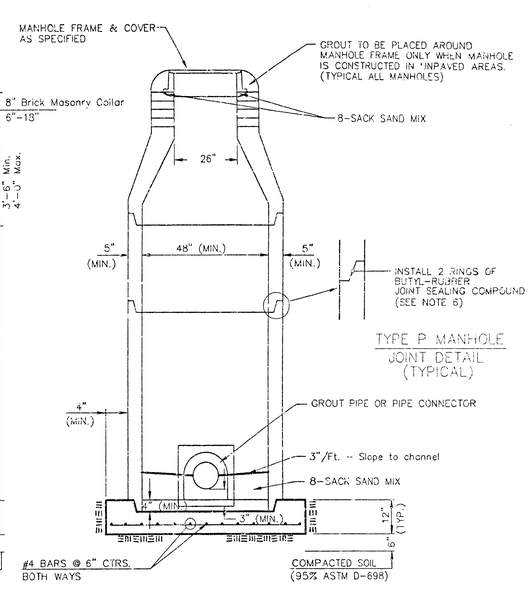

SECTION X (TYPICAL)

GENERAL NOTES

PRECAST MANHOLE NOTES

1. ALL PRECAST CONCRETE MANHOLE SECTIONS SHALL CONFORM TO THE LATEST REVISIONS OF A.S.T.M. C478 AS MODIFIED BY THE SPECIFICATIONS.
2. NON-SHRINK GROUT SHALL BE NON-METALLIC TYPE.
3. APPROVED FLEXIBLE WATERSTOP GASKETS SHALL BE INSTALLED TO JOIN THE SEWER TO THE MANHOLE WALL WHEN A.B.S. COMPOSITE PIPE OR P.V.C. PIPE IS USED. FOR OTHER TYPES OF PIPE THE SEWER SHALL BE GROUTED IN PLACE WITH NON-SHRINK GROUT. THE SEWER PIPE SHALL BE SUPPORTED WITH CONCRETE ENCASEMENT A MINIMUM OF 3 FEET FROM THE MANHOLE WALL AND TO THE FIRST JOINT FOR V.C.P. SUCH THAT THE JOINT REMAINS FLEXIBLE.
4. ALL INSIDE SURFACES OF THE CONCRETE MANHOLE WHICH WOULD BE EXPOSED TO SEWER GAS SHALL BE COATED WITH 2 COATS TNEMEC SERIES 66 HI-BUILD EPOXOLINE, DRY THICKNESS OF 8 MILS (MIN.)
5. EXTERIOR MANHOLE WALLS SHALL BE COATED WITH 1 COAT MOBILARMA 633 BITUMINOUS COATING.
6. JOINT SEALING COMPOUND SHALL BE KENT SEAL NO. 2 OR APPROVED EQUAL.
7. PRECAST MANHOLES SHALL BE SET AT LEAST 4 INCHES INTO THE MANHOLE BASE.
8. TOP C.' MANHOLE FLOOR SLAB SHALL BE AT LEAST 3 INCHES BELOW THE FLOW LINE OF THE OUTLET PIPE TO INSURE SUFFICIENT MINIMUM THICKNESS OF SHAPED INVERT.
9. LIFTING HOLES SHALL BE FILLED WITH NON-SHRINK GROUT AND THE INTERIOR SURFACE COATED AS SPECIFIED.
10. MORTAR USED IN MASONRY CONSTRUCTION SHALL CONTAIN 8 SACKS OF CEMENT PER CUBIC YARD. CONCRETE USED IN MANHOLE BASES SHALL CONFORM TO THE REQUIREMENTS OF CONCRETE FOR CONCRETE PAVEMENT CONSTRUCTION AS SPECIFIED IN THE CITY STANDARD PAVING SPECIFICATIONS USING CITY CONCRETE PAVEMENT MIX WITHOUT AIR ENTRAINING ADMIXTURE. MORTAR SHALL BE PLACED AROUND THE MANHOLE RING AS SHOWN ON THE DRAWINGS WHEN MANHOLES ARE CONSTRUCTED IN UNPAVED AREAS. MANHOLES CONSTRUCTED WHERE PIPE SIZES ARE SMALLER THAN 24" SHALL HAVE AN INSIDE DIAMETER OF 4'. MANHOLES CONSTRUCTED WHERE PIPE SIZES ARE 24" OR LARGER SHALL HAVE AN INSIDE DIAMETER OF 5'. COMPLETED MANHOLE SHALL BE WITHOUT LEAKS AND WATER TIGHT.
11. REINFORCING STEEL SHALL BE INSTALLED IN THE MANHOLE BASES AND SHALL CONSIST OF NO. 4 BARS PLACED ON 6" CENTERS IN BOTH DIRECTIONS. THE MANHOLE BASE REINFORCEMENT SHALL BE PLACED AT LEAST 3" ABOVE THE BOTTOM OF THE MANHOLE BASE. ALL COSTS FOR FURNISHING AND INSTALLING REINFORCING STEEL SHALL BE INCLUDED IN THE UNIT PRICE BID FOR THE MANHOLE.
12. OPENINGS SHALL BE CUT INTO THE MANHOLE WALL WHEN OUTSIDE DROPS ARE CONSTRUCTED ON EXISTING MANHOLES. SUCH OPENINGS CUT INTO EXISTING MANHOLES SHALL BE AS SMALL AS PRACTICAL TO FACILITATE INSTALLING AND GROUTING THE NEW PIPE IN PLACE. WATERSTOP GASKETS SHALL BE USED WITH P.V.C. AND A.B.S. COMPOSITE PIPE. THE NEW PIPE SHALL BE GROUTED INTO THE OPENING USING AN APPROVED NON-SHRINK GROUT FOR THE FULL MANHOLE WALL THICKNESS. THE EXTERIOR OF THE COMPLETED CONNECTION SHALL BE SEALED WITH AN APPROVED BITUMINOUS COATING SUCH THAT THE CONNECTION WILL BE WATER TIGHT. FLOOR OF MANHOLE SHALL BE MODIFIED TO FORM NEW FLOW CHANNEL FOR THE NEW CONNECTION AS INDICATED BY THE DRAWING. THIS WORK, INCLUDING MODIFICATION OF MANHOLE FLOOR, SHALL BE PAID FOR AT THE UNIT PRICE BID FOR OUTSIDE DROP STACK CONSTRUCTED ON EXISTING MANHOLE.
13. THE FLOORS OF ALL MANHOLES SHALL BE SHAPED WITH FLOW CHANNELS SUCH THAT THE MANHOLES WILL BE SELF CLEANING AND FREE OF AREAS WHERE SOLIDS COULD BE DEPOSITED AS SEWAGE FLOWS THROUGH THE MANHOLE FROM ALL INLET PIPES TO THE OUTLET PIPE. FLOW CHANNELS SHALL BE FORMED TO MATCH THE BOTTOM HALVES OF THE INFLOWING PIPES AND THE OUTFLOWING PIPE AS SHOWN BY THE DRAWINGS EXCEPT FOR INSIDE DROP MANHOLES. FLOW CHANNELS FOR INSIDE DROP MANHOLES SHALL BE CONSTRUCTED AS INDICATED BY THE DRAWING. MANHOLE FLOORS SHALL HAVE SLOPES OF 3 INCHES PER FOOT IN THE AREAS OUTSIDE OF THE FLOW CHANNELS SLOPED TOWARD THE FLOW CHANNELS. PIPES LAID THROUGH MANHOLES SHALL HAVE THE TOP HALF REMOVED TO NEAT LINES FOR THE FULL INSIDE DIAMETER OF THE MANHOLE. MANHOLE FLOORS SHALL THEN BE SHAPED AROUND THE BOTTOM HALF OF THE PIPE WHICH FORMS THE FLOW CHANNEL.
14. PIPES INSTALLED WITHIN THE EXCAVATION MADE FOR THE MANHOLE SHALL BE CRADLED WITH CONCRETE TO THE LIMITS OF THE MANHOLE EXCAVATION. WHEN CLAY PIPE IS USED, THE CRADLE SHALL EXTEND TO THE FIRST JOINT OUTSIDE THE MANHOLE. THE CRADLE SHALL BE TERMINATED AT THE CLAY PIPE JOINT IN A MANNER WHICH WILL MAINTAIN THE FLEXIBILITY OF THE JOINT. COST OF CRADLE WITHIN MANHOLE EXCAVATION OR TO CLAY PIPE JOINTS ADJACENT TO MANHOLE SHALL BE INCLUDED IN THE UNIT PRICE BID FOR THE MANHOLE.
15. MANHOLE COVER CASTINGS AND MANHOLE FRAME CASTINGS SHALL CONFORM TO THE REQUIREMENTS AS INDICATED IN THE STANDARD SPECIFICATIONS AND AS SHOWN IN THE STANDARD DETAIL DRAWING.
16. THE VERTICAL DROP IN INSIDE DROP MANHOLES SHALL NOT EXCEED 2' FOR INFLOWING PIPES SIZED 12" OR SMALLER AND 2' FOR INFLOWING PIPES LARGER THAN 12". THE CROWNS OF INFLOWING PIPES SHALL NEVER BE SET LOWER THAN THE CROWN OF THE OUTFLOWING PIPE.
17. STANDARD MANHOLES AND STANDARD INSIDE DROP MANHOLES SHALL BE BID AS STANDARD MANHOLES FOR THE TYPE AND DIAMETER INDICATED. OUTSIDE DROP MANHOLES SHALL BE BID AS STANDARD OUTSIDE DROP MANHOLES FOR THE TYPE AND DIAMETER INDICATED. ALL MANHOLE DIAMETERS WILL BE 4' UNLESS INDICATED OTHERWISE.
18. A BRICK MASONRY COLLAR SHALL BE INSTALLED BETWEEN THE CAST IRON FRAME AND THE CONCENTRIC CONE. THE COLLAR WILL HAVE 8" WALLS AND A VERTICAL HEIGHT OF 6" MINIMUM AND 18" MAXIMUM. A 1" COAT OF MORTAR WILL BE PLASTERED ON THE OUTSIDE OF THE COLLAR. THE USE OF PRE-CAST CONCRETE SPACERS FOR MANHOLE TOP ADJUSTMENT IS ALSO ALLOWED.

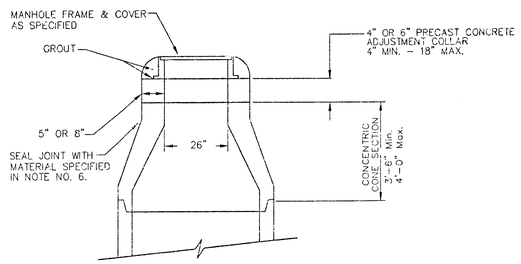

ALTERNATE CONSTRUCTION IN UNPAVED AREAS

CITY OF WICHITA

STD. MANHOLE DETAILS

SEWER APPURTENANCES

BAUGHMAN COMPANY P.A.

ENGINEERING, SURVEYING, & PLANNING

316-262-7271 • 315 ELLIS • WICHITA, KANSAS 67211

PROJECT NUMBER 1103 PPS (607881)

SHEET 8 OF 8

DESIGN	DR. AWN	APPROVED	DATE	SCALE
STAFF	STAFF		04-01	NONE

Wichita\NWY\mh 00-11-E865

MANHOLE FRAME AND COVER DETAIL

ADOPTED AS STANDARD DESIGN BY
CITY OF WICHITA, KANSAS

MANHOLE COVER
Weight = 180 Lbs.

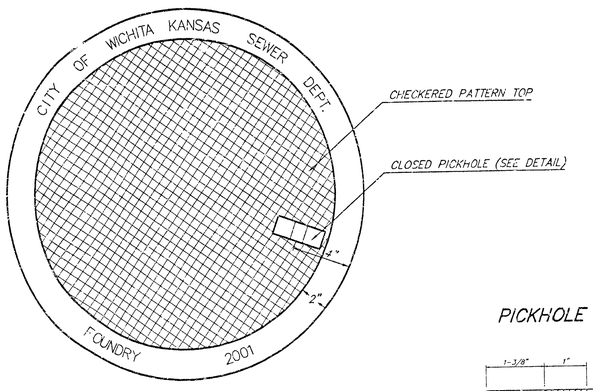

TOP VIEW

PICKHOLE DETAIL

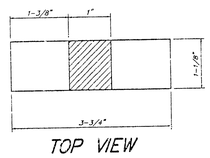

TOP VIEW

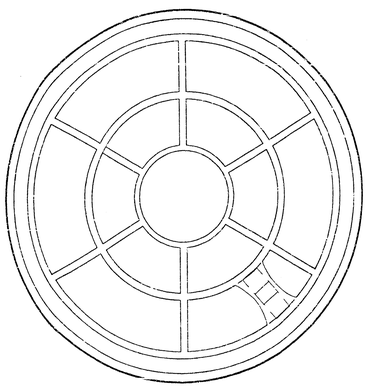

BOTTOM VIEW

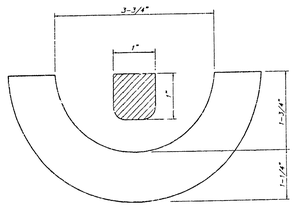

SECTION VIEW

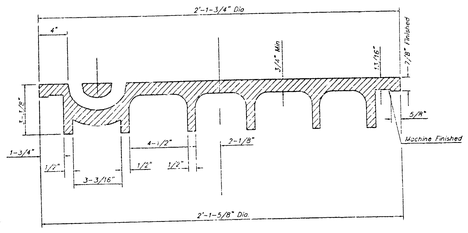

SECTION VIEW

MANHOLE FRAME
Weight = 145 Lbs.

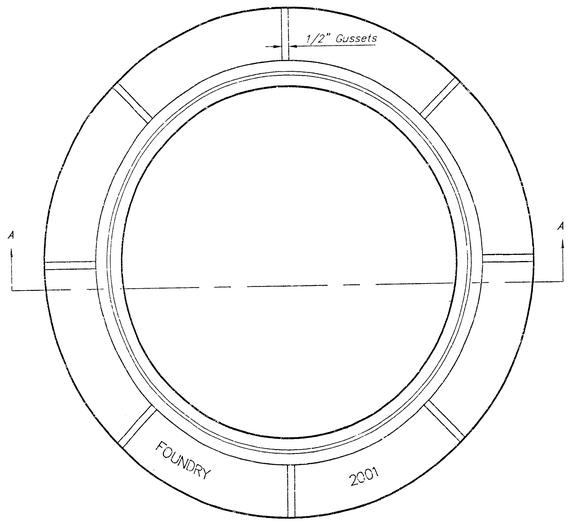

TOP VIEW

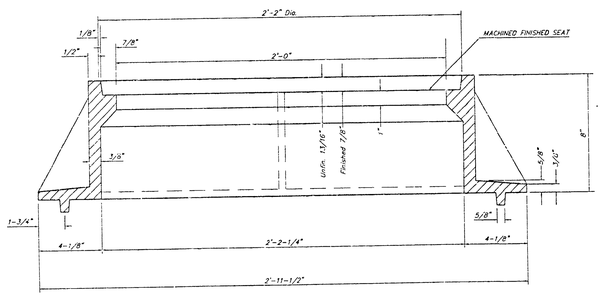

SECTION A–A

GENERAL NOTES

MANHOLE CASTINGS SHALL BE MANUFACTURED USING GOOD QUALITY GRAY IRON CONFORMING TO CLASS 30 OF A.S.T.M. DESIGNATION A-48. DIMENSIONS AND WEIGHTS SHOWN ON THE DETAILED DRAWINGS SHALL BE CONSIDERED AS MINIMUM REQUIREMENTS AND ANY DEVIATIONS FROM THE DIMENSIONS SHOWN MUST BE SPECIFICALLY APPROVED. THE FINISHED CASTINGS SHALL BE OF UNIFORM QUALITY, FREE FROM BLOWHOLES, POROSITY, HARD SPOTS, SHRINKAGE DISTORTIONS OR OTHER DEFECTS.

MANHOLE CASTINGS SHALL BE COATED WITH AN ASPHALT PAINT RESULTING IN A SMOOTH, TOUGH AND TENACIOUS COATING WHICH IS NOT BRITTLE OR TACKY.

MANHOLE CASTINGS SHALL BE MANUFACTURED SUCH THAT A COVER MANUFACTURED BY ANY ONE FOUNDRY WILL FIT INTERCHANGEABLY INTO A FRAME MANUFACTURED BY ANOTHER FOUNDRY AND STILL MEET ALLOWABLE CLEARANCES AND NON-ROCKING REQUIREMENTS. THIS WILL REQUIRE MANUFACTURING OF THE MATCHING FACES ON THE COVER AND THE FRAME TO CLOSE TOLERANCES.

THE OUTSIDE CIRCUMFERENCE OF THE VERTICAL FACE OF THE COVER AND THE INSIDE CIRCUMFERENCE OF THE VERTICAL FACE IN THE FRAME RECESS SHALL BE MANUFACTURED TO TOLERANCES SUCH THAT THE CLEARANCE BETWEEN THE COVER AND FRAME WILL NOT EXCEED 1/8" AT ANY POINT AROUND THE CIRCUMFERENCE OF THE COVER. THE SEATING SURFACES BETWEEN THE COVER AND FRAME SHALL BE MACHINED SUCH AS THESE SURFACES SHALL MAKE FULL CONTACT FOR THEIR FULL CIRCUMFERENCE TO PRECLUDE THE COVER FROM ROCKING IN THE FRAME.

THE MANHOLE FRAME AND COVER SHALL BE MARKED WITH LETTERING INDICATING THE NAME OF THE MANUFACTURER AND THE YEAR WHEN THE COVER OR FRAME WAS CAST. THE COVER SHALL BE FURTHER IDENTIFIED WITH REGARDS TO OWNERSHIP USING LETTERS AT LEAST 1 INCH IN HEIGHT. THIS IDENTIFICATION SHALL BE "CITY OF WICHITA SEWER DEPARTMENT". THE WORD DEPARTMENT MAY BE ABBREVIATED. THE TEXTURE OF THE TOP SURFACE OF THE COVER SHALL BE MANUFACTURED IN A CHECKERED PATTERN DESIGN AS INDICATED ON THE DRAWINGS. SMOOTH BLOCKOUTS SHALL BE UTILIZED TO HIGHLIGHT THE LETTERING ON THE COVER SURFACE. THE TOTAL AREA OF SMOOTH SURFACE BLOCKOUT SHALL NOT EXCEED THE AREA AS INDICATED ON THE DRAWING. POSITIONING OF SMOOTH BLOCKOUTS AND LETTERING MAY VARY FROM THAT SHOWN ON THE DETAILED DRAWING.

MANHOLE FRAME AND COVER DETAIL
ADOPTED AS STANDARD DESIGN BY
CITY OF WICHITA, KANSAS

BAUGHMAN COMPANY P.A.
ENGINEERING, SURVEYING, & PLANNING
316-262-7271 • 315 ELLIS • WICHITA, KANSAS 67211

PROJECT NUMBER 1103 PPS (607881)

DESIGN	DRAWN	APPROVED	DATE	SCALE	SHEET
STAFF	STAFF		04-01	NONE	7 OF 8

W:\Christie\W Mining\D-7-1.DGN

RIDGE PORT NORTH 2ND ADDITION

WICHITA, SEDGWICK COUNTY, KANSAS

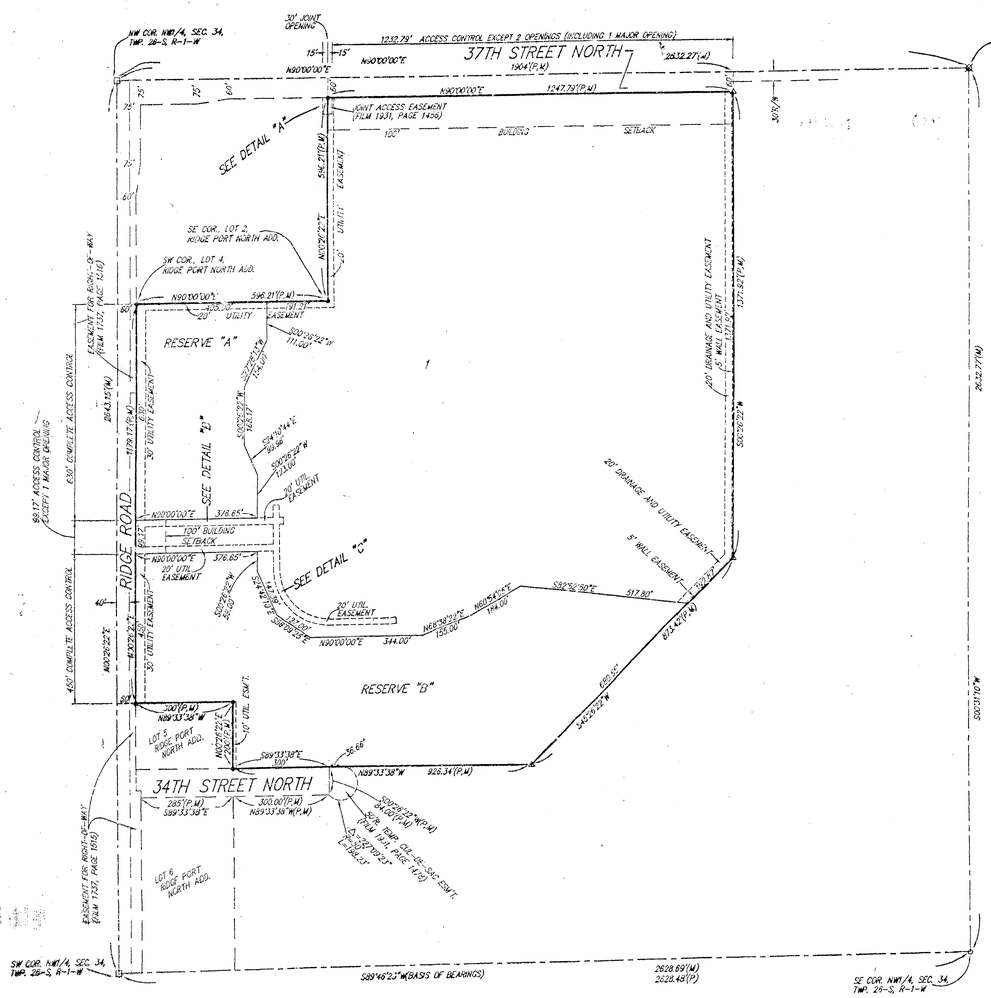

LIBRARY COPY
SEDGWICK COUNTY, KANSAS
REGISTER OF DEEDS

(M) = MEASURED
(P) = PLATTED

△ = #4 REBAR W/ "BAUGHMAN" CAP (FOUND)
● = #4 REBAR W/ "BAUGHMAN" CAP (SET)
○ = 5/8" IRON (FOUND)
□ = RAILROAD SPIKE (FOUND)
⊠ = NAIL IN 1/2" IRON (FOUND)

NOTE:
ADDITIONAL BUILDING SETBACK REQUIREMENTS PER COMMUNITY UNIT PLAN DP-237.

MINIMUM BUILDING PAD ELEVATION FOR LOWEST OPENING TO THE STRUCTURES	
LOT	ELEVATION (CITY DATUM)
1	144.6

BENCHMARK:
CITY DISC. — SW COR. RIDGE RD. & 29TH ST. NO., 80.8' S. & 63.7' W. OF ℄ BOTH.
ELEV. = 139.15 CITY DATUM (1320.55 M.S.L.)

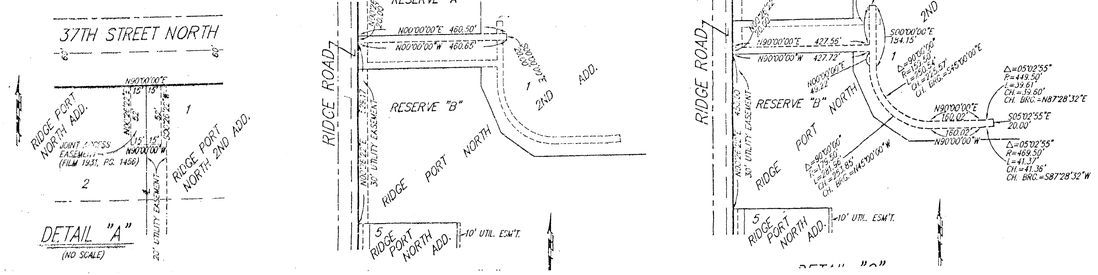

State of Kansas) SS
Sedgwick County)

We, Baughman Company, P.A., Surveyors in aforesaid county and state do hereby certify that we have surveyed and platted "RIDGE PORT NORTH 2ND ADDITION", Wichita, Sedgwick County, Kansas and that the accompaning plat is a true and correct exhibit of the property surveyed, described as and being a replat of Lot 1 and Reserve "D", Ridge Port North Addition, Wichita, Sedgwick County, Kansas.

All being situated in the NW 1/4, Sec. 34, Twp. 26-S, R-1-W of the 6th P.M., Sedwick County, Kansas.

Existing easements and dedications being vacated by virtue of K.S.A. 12-512(b).

Baughman Company, P.A.

Michael G. Correy, Surveyor
Michael G. Correy
MICHAEL G. CORREY REGISTERED LS-9710 KANSAS L.S. SURVEYOR

Know all men by these presents that we, the undersigned, have caused the land in the surveyors certificate to be platted into a Lot and Reserves to be known as "RIDGE PORT NORTH 2ND ADDITION", Wichita, Sedgwick County, Kansas. The utility easements are hereby granted as indicated for the construction and maintenance of all public utilities. The drainage and utility easements are hereby granted as indicated for drainage purposes and for the construction and maintenance of all public utilities. The wall easements are hereby granted as indicated for the construction and maintenance of a private screening wall and utility main lines and service lines shall be allowed to cross these easements. Reserves "A" and "B" are hereby reserved for drainage purposes, lakes, landscaping, open space, berms, gazebos, screening walls, sidewalks, and utilities as confined to easements. Reserves "A" and "B" shall be owned and maintained by the owner of Lot 1. Access control shall be as depicted on the face of the plat. The Minimum Building Pad Elevations for the lowest opening to the structures shall be as indicated on the face of the plat.

R & R Realty, LLC

Jay W. Russell, Manager

Ritchie Associates, Inc.

Kevin W. Mullen, Manager
Kevin W. Mullen, President

Via Christi Property Services, Inc.

David M. Mohr, President

State of Kansas) SS
Sedgwick County) The foregoing instrument acknowledged before me, this 12TH day of OCTOBER, 1999, by Jay W. Russell, Manager of R & R Realty, LLC, on behalf of the company.

JUDITH M. TERHUNE Notary Public - State of Kansas My Appt. Expires 11-7-2001

Judith M. Terhune, Notary Public
JUDITH M. TERHUNE

My App't. Exp. 11-7-2001

State of Kansas) SS
Sedgwick County) The foregoing instrument acknowledged before me, this 12TH day of OCTOBER, 1999, by Kevin M. Mullen, President of Ritchie Associates, Inc., as Manager of R & R Realty, LLC, on behalf of the company.

DIANE M. STALBAUM State of Kansas My Appt. Exp. 2-12-2003

Diane M. Stalbaum, Notary Public
DIANE M. STALBAUM

My App't. Exp. 2/12/2003

State of Kansas) SS
Sedgwick County) The foregoing instrument acknowledged before me, this 12TH day of OCTOBER, 1999, on behalf of the corporation.

Philip J. Meyer, Notary Public
PHILIP J. MEYER

My App't. Exp. 5/5/01

This plat of "RIDGE PORT NORTH 2ND ADDITION", Wichita, Sedgwick County, Kansas has been submitted to and approved by the Wichita-Sedgwick County Metropolitan Area Planning Commission, Wichita, Kansas.

Dated this 16TH day of September, 1999.

Wichita-Sedgwick County Metropolitan Area Planning Commission

William M. Johnson, Chairman

Marvin S. Krout, Secretary

This plat approved and all dedications shown hereon accepted by the City Council of the City of Wichita, Kansas, this 23 day of November, 1999.

Bob Knight, Mayor

Pat Burnett, City Clerk

Entered on transfer record this 14th day of December, 1999.

James Ilford, County Clerk

Reviewed in accordance with K.S.A. 58-2005 on this 3rd day of November, 1999.

Tricia L. Robello, L.S. #1246
Deputy County Surveyor
Sedgwick County, Kansas

State of Kansas) SS
Sedgwick County) This is to certify that this plat has been filed for record in the office of the Register of Deeds, this 14TH day of December, 1999, at 12:00 o'clock P. M. and is duly recorded.

Bill Meek, Register of Deeds

Linda Kizzire, Deputy

1850191

We the undersigned, holders of a mortgage on the above described property, do hereby consent to this plat of "RIDGE PORT NORTH 2ND ADDITION", Wichita, Sedgwick County, Kansas.

Intrust Bank, N.A.

Gary D. Schmitt, Senior V.P.
GARY D. SCHMITT (Title)

State of Kansas) SS
Sedgwick County) The foregoing instrument acknowledged before me, this 19TH day of OCTOBER, 1999, by GARY D. SCHMITT, SENIOR V.P (Title) of the intrust Bank, N.A., on behalf of the bank.

JUDITH M. TERHUNE Notary Public - State of Kansas My Appt. Expires 11-7-2001

Judith M. Terhune, Notary Public
JUDITH M. TERHUNE

My App't. Exp. 11-7-2001

18 14 03 10

North 2nd\dwg\rdgpthd2.dwg Tue Oct 12 11:31:05 1999