POND PLAN
SAWMILL CREEK ADDITION
CITY OF WICHITA, KANSAS
MICHAEL E. LINDEBAK, P.E. - CITY ENGINEER
PROJECT NO. 1119PPS (607861)

GENERAL NOTES

Contractor will be required to provide a minimum advance notice of twenty-four (24) hours to utility companies prior to starting any excavation as follows:

Kansas One-Call 687-2470

The Contractor must notify the following in case of an emergency:

Cox Communications	262-0661
Kansas Gas Service	383-9600
K.G.E. Electric	383-8600
Peoples Natural Gas Company	1-800-303-0357
Southwestern Bell Telephone Company	1-800-286-8313
City of Wichita Water Department	262-6000
City of Wichita Sewer Maintenance	262-5000
Jayhawk Pipeline LLC	755-0241

Underground utility service lines and overhead utility pole lines are to be adjusted as necessary by others prior to construction unless the plans specifically call for their adjustment by the Contractor or unless the plans specifically identify a utility to be adjusted by its owner during construction. Existing utilities and their location, as shown on the plans, represent the best information obtainable for design. Location information has been obtained from the various utility companies and is either from company record drawings or company-provided field locations. The Contractor will be required to work around existing utilities within the right-of-way which do not conflict with proposed construction.

Rubble from the removal of miscellaneous structures and excess excavation which is to be wasted shall be disposed of on sites to be provided by the Contractor. These sites shall be approved by the Engineer as to suitability, appearance and site location. Locations that, in the opinion of the Engineer, will leave an unsightly appearance will not be approved.

All disposal sites must be approved by the Kansas Department of Health and Environment. Material either stockpiled or disposed of in a flood plain would require a Kansas State Board of Agriculture permit. Any material dumped in waters of the United States or wetlands is subject to U.S. Corps permitting regulations. Any material buried or stockpiled beyond approved of Engineers construction limits would require additional archeological investigations unless buried in a previously approved borrow location.

The Engineer shall take field ties to all quarter section corners. The Contractor shall set a City survey monument in the required location where such quarter section corners fall within the limits of pavement construction. Survey monuments will be furnished by the City. The Engineer will accurately located and install the iron at the quarter section corner. This work will not be paid for directly, but shall be considered subsidiary to the other pay items of work in the contract.

The Contractor shall notify pipeline companies at least 24 hours in advance of any work being performed across and/or adjacent to pipelines.

The Contractor shall give all property owners and/or tenants of developed property directly abutting the construction of this project a minimum of ten (10) days advance notice prior to start of construction.

The Contractor shall seed, fertilize and mulch or sod all disturbed areas upon completion of construction. Incidental to the bid item for "Site Clearing and Restoration".

APPROVED AS NOTED
BY CITY ENGINEER OF WICHITA

Sanitary Sewers _____

Storm Sewers VRH 6/6/01

Driveway Approaches _____

Water Mains _____

Paving _____

NOTE TO CONTRACTORS

Inspection and testing for this project are to be provided by a Licensed Consulting Engineering Firm under contract with the Owner/Developer. Said inspection to be in accordance with the City of Wichita standard construction engineering practices and certified by a Licensed Professional Engineer. No work shall be performed in dedicated easements or public right-of-way by the Contractor without such inspection, nor shall any work be commenced without written authorization by the City Engineer.

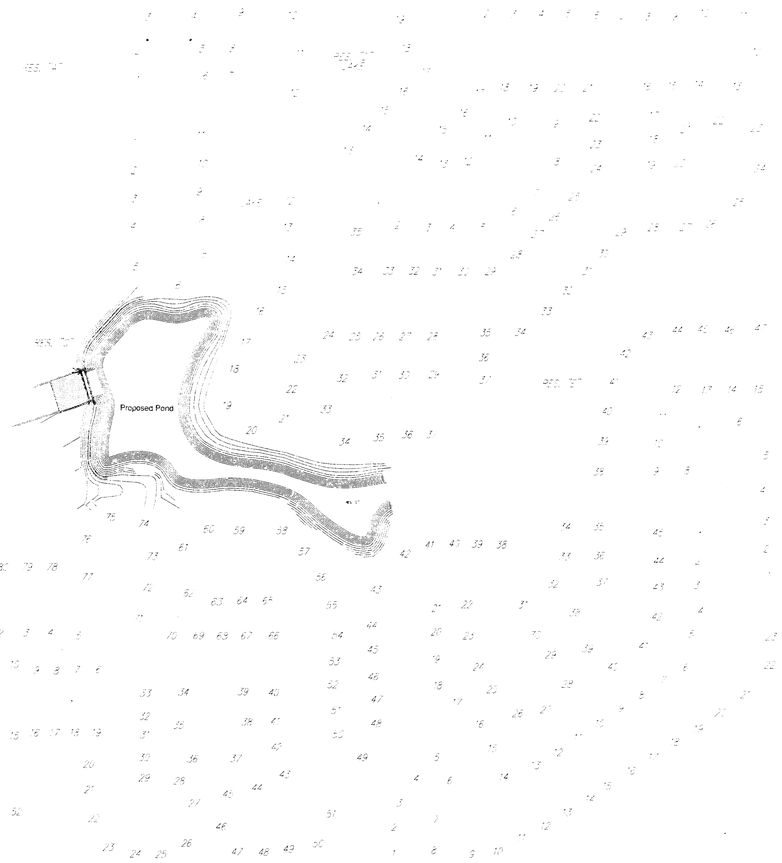

Scale: 1" = 200'

Bench Marks

"□" SOUTHWEST CORNER OF HEADWALL OF RCBC ON THE WEST SIDE OF ROCK 1060' NORTH OF THE INTERSECTION OF ROCK ROAD AND 45TH STREET NORTH

ELEVATION: 1379.84 (MSL)

"□" NORTHEAST CORNER OF HEADWALL OF RCBC ON THE EAST SIDE OF ROCK ROAD, WILLOWBEND 2ND ADDITION.

ELEVATION: 1374.39 (MSL)

INDEX

1. TITLE SHEET
2. POND PLAN
3. POND PLAN COORDINATES
4-5. WEIR DETAIL
6. FILL PLACEMENT

PROJECT LOCATION

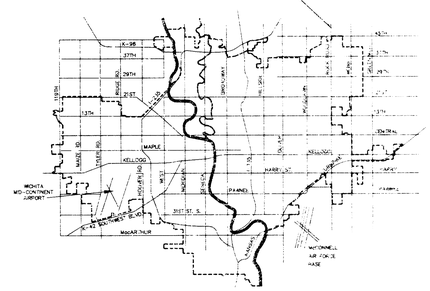

VICINITY MAP

ITEM	UNITS	QUANTITY
Pond Excavation	CU. YD.	71,800
Pond Fill	CU. YD.	6,600
Lot Fill	CU. YD.	55,200
Site Clearing and Restoration	L.S.	1
CONCRETE WEIR	L.S.	1

Quantities are for Information Only

Clarence E. Bohm
5/20/01

AS BUILT 11-5-01

SRB PROJ.# 18290

SRB
SAVOY, RUGGLES & BOHM, P.A.
ENGINEERING & SURVEYING

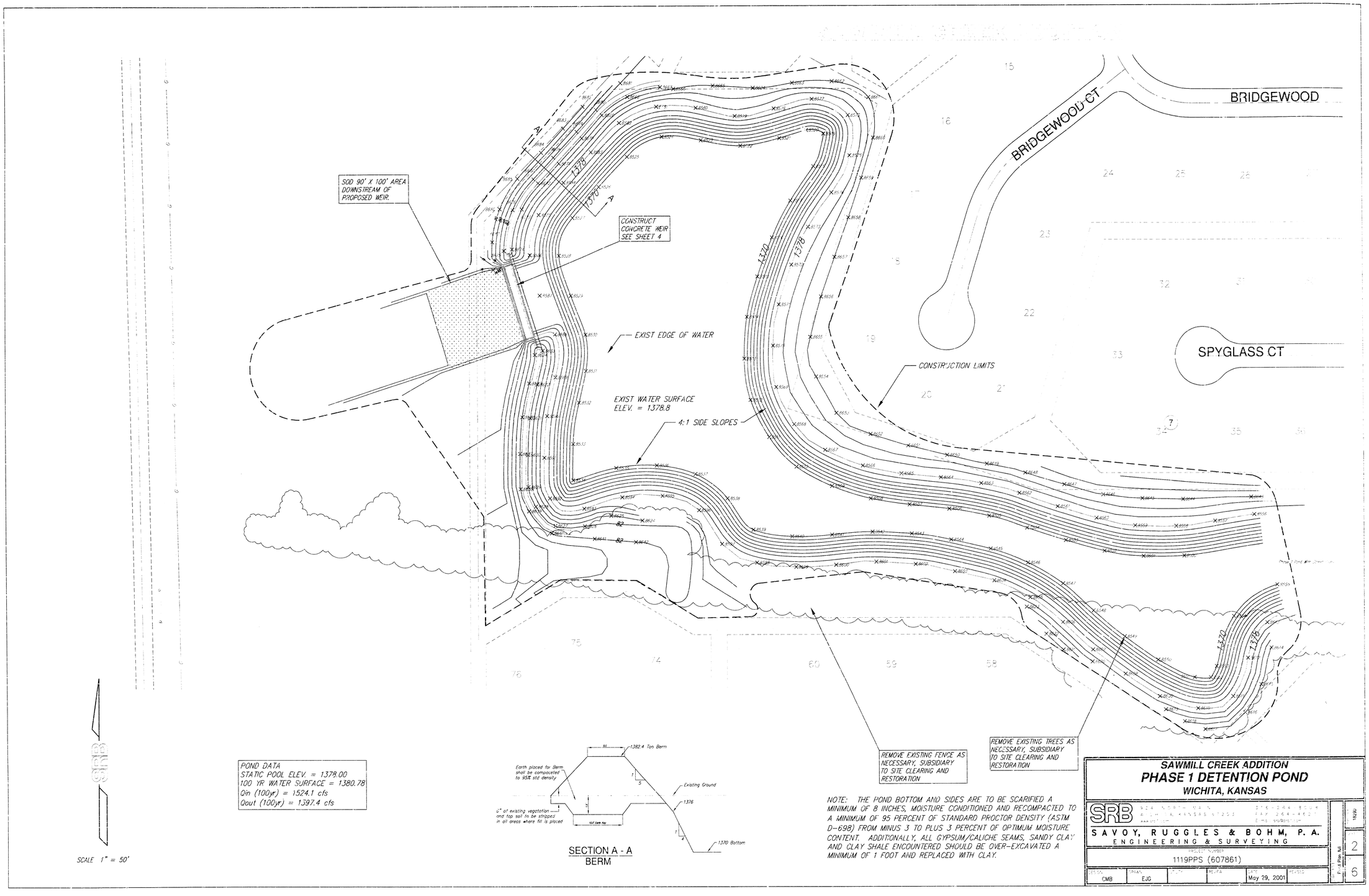

POND DATA
STATIC POOL ELEV. = 1378.00
100 YR WATER SURFACE = 1380.78
Qin (100yr) = 1524.1 cfs
Qout (100yr) = 1397.4 cfs

SECTION A - A
BERM

NOTE: THE POND BOTTOM AND SIDES ARE TO BE SCARIFIED A MINIMUM OF 8 INCHES, MOISTURE CONDITIONED AND RECOMPACTED TO A MINIMUM OF 95 PERCENT OF STANDARD PROCTOR DENSITY (ASTM D-698) FROM MINUS 3 TO PLUS 3 PERCENT OF OPTIMUM MOISTURE CONTENT. ADDITIONALLY, ALL GYPSUM/CALICHE SEAMS, SANDY CLAY AND CLAY SHALE ENCOUNTERED SHOULD BE OVER-EXCAVATED A MINIMUM OF 1 FOOT AND REPLACED WITH CLAY.

SAWMILL CREEK ADDITION
PHASE 1 DETENTION POND
WICHITA, KANSAS

SRB
SAVOY, RUGGLES & BOHM, P.A.
ENGINEERING & SURVEYING

PROJECT NUMBER: 1119PPS (607861)

DESIGN	DRAWN		REVIEW	DATE	REVISED
CMB	EJG			May 29, 2001	

Pond Plan full

2
6

Pond Coordinate Table

Point No.	Northing	Northing	Elevation
8500	20328.19	20208.28	1370
8501	20327.73	20158.3	1370
8502	20334.05	20108.8	1370
8503	20346.8	20060.46	1370
8504	20361.77	20012.76	1370
8505	20376.11	19964.92	1370
8506	20384.59	19915.66	1370
8507	20389.67	19865.92	1370
8508	20397.03	19816.49	1370
8509	20411.81	19768.81	1370
8510	20435.04	19724.63	1370
8511	20470.49	19689.75	1370
8512	20514.77	19666.81	1370
8513	20563.93	19659.19	1370
8514	20613.74	19662.68	1370
8515	20661.86	19676.08	1370
8516	20708.35	19694.42	1370
8517	20752.12	19718.46	1370
8518	20792.76	19747.58	1370
8519	20831.38	19760.38	1370
8520	20835.88	19739.07	1370
8521	20826.53	19704.67	1370
8522	20817.6	19655.59	1370
8523	20824.31	19606.16	1370
8524	20828.58	19556.7	1370
8525	20804.79	19513.79	1370
8526	20768.93	19478.95	1370
8527	20732.29	19444.94	1370
8528	20687.1	19427.54	1370
8529	20639.53	19442.29	1370
8530	20593.01	19460.56	1370
8531	20549.67	19460.86	1370
8532	20512	19452.07	1370
8533	20462.59	19444.47	1370
8534	20419.45	19444.27	1370
8535	20433.89	19498.94	1370
8536	20436.91	19548.7	1370
8537	20426.55	19597.39	1370
8538	20397.41	19637.4	1370
8539	20360.02	19669.57	1370
8540	20351.85	19718.65	1370
8541	20353.81	19768.56	1370
8542	20357.25	19818.41	1370
8543	20354.99	19868.35	1370
8544	20347.79	19917.78	1370
8545	20336.8	19966.55	1370
8546	20320.2	20013.63	1370
8547	20295.22	20056.65	1370
8548	20262.95	20095.01	1370
8549	20232.02	20134.25	1370
8550	20204.09	20175.72	1370
8551	20183.3	20220.92	1370
8552	20182.9	20241.06	1370
8553	20196.32	20248.51	1370
8554	20255.95	20270.89	1370
8555	20293.51	20324.52	1370
8556	20377.34	20296.83	1378
8557	20369.62	20247.43	1378
8558	20363.48	20197.9	1378
8559	20364.14	20147.94	1378
8560	20373.35	20098.94	1378
8623	20267.5	20011.98	1382

Point No.	Northing	Northing	Elevation
8561	20387.12	20050.88	1378
8562	20403.18	20003.54	1378
8563	20415	19955.05	1378
8564	20422.02	19905.58	1378
8565	20426.56	19855.79	1378
8566	20430.19	19806.82	1378
8567	20455.01	19760.6	1378
8568	20485.76	19721.87	1378
8569	20530.05	19699.14	1378
8570	20579.43	19695.12	1378
8571	20628.48	19702.95	1378
8572	20675.72	19719.24	1378
8573	20720.72	19740.77	1378
8574	20761.39	19769.77	1378
8575	20805.61	19791.93	1378
8576	20853.57	19790.24	1378
8577	20872.77	19746.01	1378
8578	20861.72	19697.44	1378
8579	20852.82	19648.64	1378
8580	20862.96	19599.88	1378
8581	20864.31	19550.25	1378
8582	20845	19504.54	1378
8583	20810.32	19468.72	1378
8584	20774.35	19434	1378
8585	20735.79	19402.51	1378
8506	20687.86	19391.31	1378
8587	20639.72	19403.21	1378
8588	20593.46	19422.18	1378
8589	20542.21	19422.53	1378
8590	20496.1	19411.68	1378
8591	20446.31	19408	1378
8592	20397.84	19414.78	1378
8593	20385.52	19457.98	1378
8594	20398.92	19506.06	1378
8595	20400.66	19555.67	1378
8596	20383.43	19601.69	1378
8597	20343.04	19630.58	1378
8598	20320.71	19673.99	1378
8599	20315.49	19723.51	1378
8600	20317.91	19773.38	1378
8601	20321.61	19823.08	1378
8602	203.. 57	19872.99	1378
8603	20309.94	19922.09	1378
8604	20298.99	19970.84	1378
8605	20278.71	20016.45	1378
8606	20249.09	20056.5	1378
8607	20216.38	20094.27	1378
8608	20187.48	20135.08	1378
8609	20160.77	20177.32	1378
8610	20146.27	20224.86	1378
8611	20160.51	20269.5	1378
8612	20206.15	20288.32	1378
8613	20246.33	20312.36	1378
8614	20218.22	20317.34	1382
8615	20174.6	20304.61	1382
8616	20141.2	20284.63	1382
8617	20121.22	20233.77	1382
8618	20130.78	20207.69	1381
8619	20145.03	20183.99	1380
8620	20202.07	20093.56	1380
8621	20216.33	20057.11	1380
8622	20235.21	20036.09	1382
8624	20371.14	19530.92	1381

Point No.	Northing	Northing	Elevation
8625	20376.9	19492.65	1381
8626	20364.54	19458.83	1380
8627	20365.06	19421.52	1380
8628	20388.06	19397.27	1380
8629	20411.3	19388.3	1380
8630	20449.73	19388.07	1380
8631	20493.67	19390.9	1380
8632	20533.66	19399.68	1390
8633	20573.89	19406.52	1380
8634	20568.91	19396.83	1380
8635	20535	19389.7	1380
8636	20494.8	19390.94	1380
8637	20450.91	19378.09	1380
8638	20408.95	19378.57	1380
8639	20382.51	19388.95	1380
8640	20355.2	19416.37	1380
8641	20349.51	19471.49	1380
8642	20345.5	19522.78	1380
8643	20398	20293.05	1381
8644	20395.46	20207.1	1381
8645	20396.56	20157.11	1381
8646	20401.28	20107.37	1381
8647	20413.36	20058.92	1381
8648	20427.45	20010.96	1381
8649	20438.05	19962.19	1381
8650	20448.62	19913.33	1381
8651	20459.96	19864.63	1381
8652	20473.78	19816.6	1381
8653	20498.91	19774.66	1381
8654	20542.27	19749.77	1381
8655	20589.49	19742.93	1381
8656	20637.57	19756.59	1381
8657	20684.7	19773.28	1381
8658	20731.75	19790.2	1381
8659	20778.98	19806.61	1381
8660	20826.65	19821.67	1381
8661	20874.93	19815.98	1381
8662	20893.85	19771	1381
8663	20892.04	19721.2	1381
8664	20886.37	19671.61	1381
8665	20889.05	19621.69	1381
8666	20885.46	19571.99	1381
8667	20887.47	19554.99	1382
8668	20876.04	19514.55	1382
8669	20854.33	19483.5	1382
8670	20827.03	19457.05	1382
8671	20797.07	19428.14	1382
8672	20773.63	19402.04	1382
8673	20742.4	19381.65	1382
8674	20694.79	19359.26	1382
8675	20693.04	19359.22	1382
8676	20741.85	19370.25	1382
8677	20778.44	19396.26	1382
8678	20804.15	19421.08	1382
8679	20834.82	19450.68	1382
8680	20860.78	19475.73	1382
8681	20892.42	19506.26	1382
8682	20864.51	19458.48	1379
8683	20838.8	19433.67	1379
8684	20809.98	19405.85	1379
8685	20779.11	19376.43	1379
8686	20742.73	19354.28	1379
8687	20703.43	19344.73	1379
8688	20670.38	19345.89	1379

SAWMILL CREEK ADDITION

PHASE 1 DETENTION POND

WICHITA, KANSAS

SRB

SAVOY, RUGGLES & BOHM, P.A.
ENGINEERING & SURVEYING

PROJECT NUMBER
1119PPS (60/821)

DESIGN	DRAWN	CHK	REVIEW	DATE	REVISION
CMB	EJG			May 29, 2001	

Pond Plan.tpl

SHEET NO. 6 OF 6

NOTES

- 18" LVC BELOW SLAB
- FILTER FARRIC BELOW SLAB TO PREVENT EROSION @ JOINTS

AIR ENTRAINED CONCRETE - F'c = 4000 psi @ 28 DAYS
REINFORCING - Fy = 60000 psi
SOIL - 2500 psf BEARING

COVER ON REINF. 2" CLEAR UNLESS OTHERWISE NOTED.

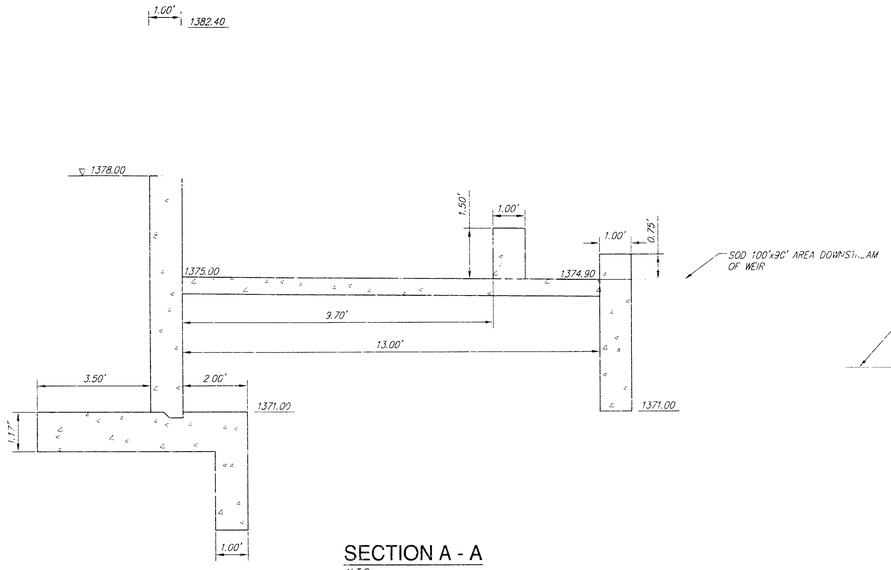

SECTION A - A
N.T.S.

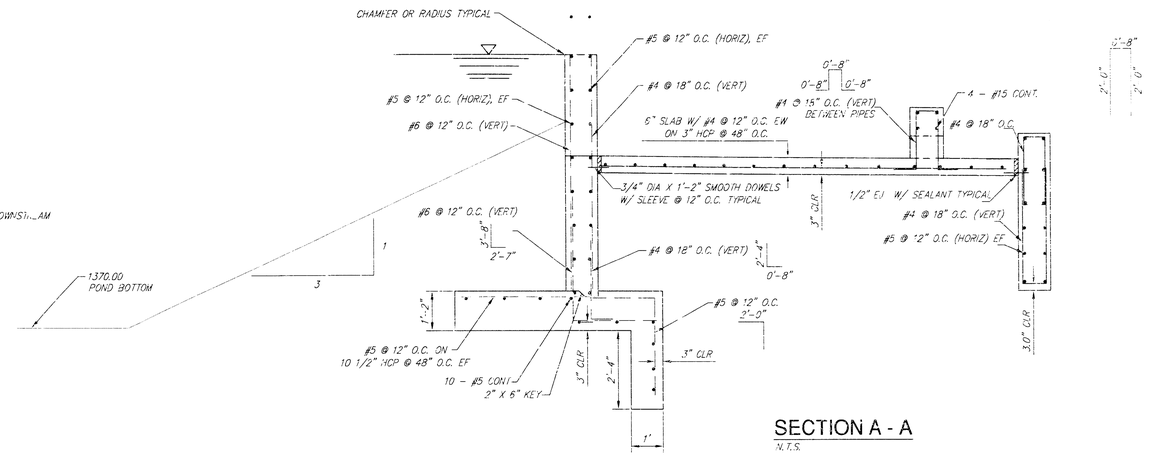

SECTION A - A
N.T.S.

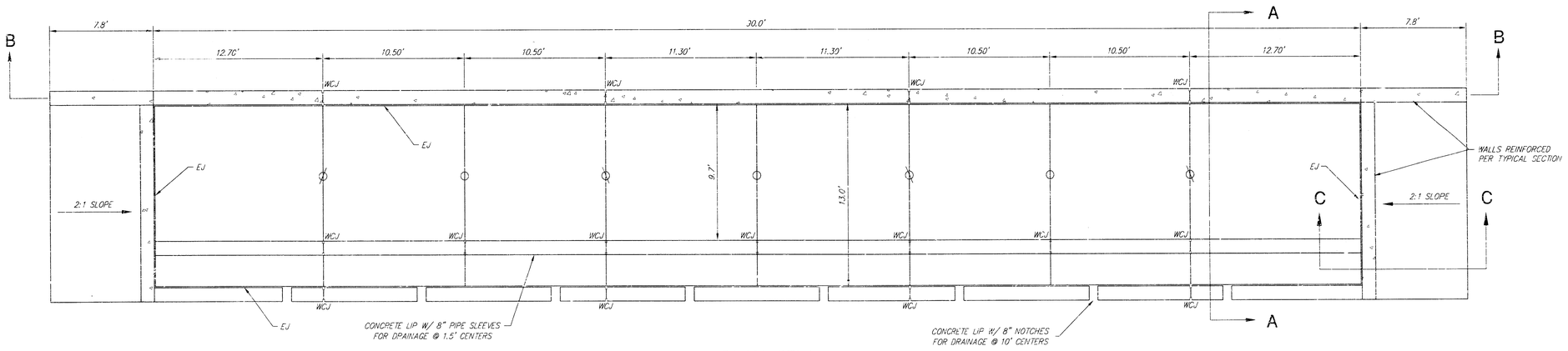

PLAN VIEW
N.T.S.

ϕ SLAB CONTROL JOINT W/ DOWELS OR CONSTRUCTION JOINT W/ DOWELS

○ SLAB CONTROL JOINT

EJ ½" EXPANSION JOINT W/ SEALANT

WCJ WALL CONTROL JOINT

Sawmill Creek
Weir Details
WICHITA, KANSAS

SRB
SAVOY, RUGGLES & BOHM, P.A.
ENGINEERING & SURVEYING

PROJECT NUMBER
1119PPS (607861)

DESIGN	DRAWN	CHECK	REVIEW	DATE	REVISED
CMB	EJS			May 29, 2001	

SHT 4 OF 6

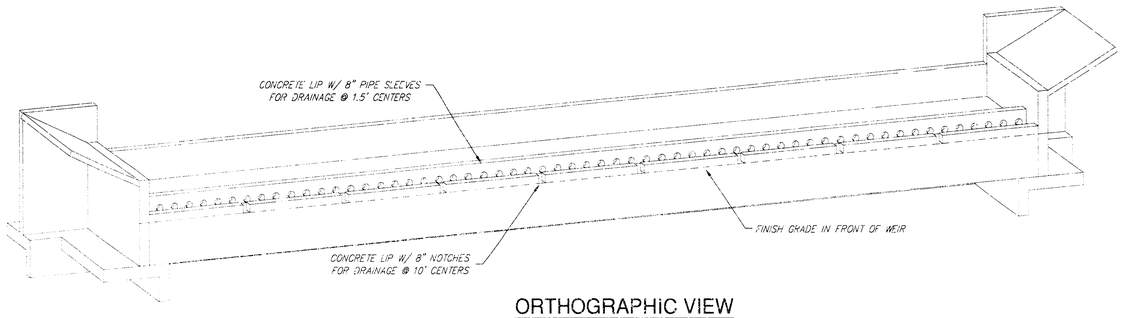

ORTHOGRAPHIC VIEW
N.T.S.

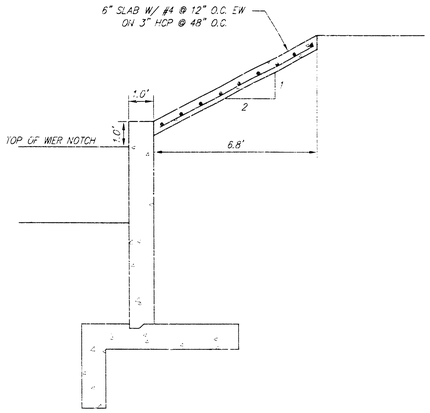

SECTION C - C
N.T.S.

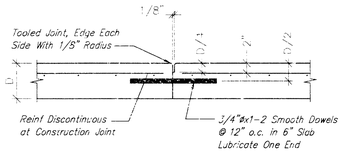

Slab Dowels Shall Occur No Closer Than 12" From an Intersection of Joints. Provide Supports for All Slab Dowels.

CONSTRUCTION JOINT
Fill Joint With Sealant

TYP. SLAB JOINT DETAILS
N.T.S.

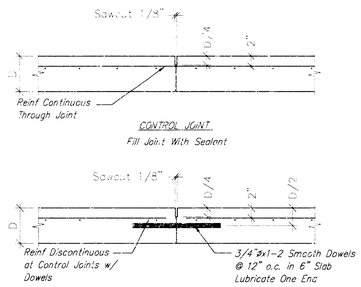

Slab Dowels Shall Occur No Closer Than 12" From an Intersection of Joints. Provide Supports for All Slab Dowels.

CONTROL JOINT W/ DOWELS
Fill Joint With Sealant

TYP. SLAB JOINT DETAILS
N.T.S.

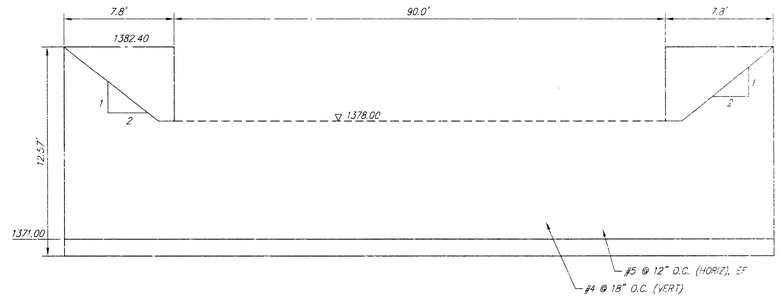

SECTION B - B
N.T.S.

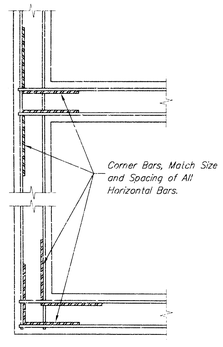

Typical Detail @ All Foundation Walls

CORNER BAR DETAIL
N.T.S.

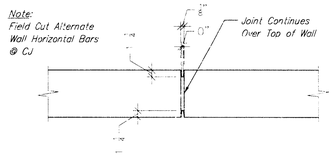

TYP. WALL CONTROL JOINT
N.T.S.

Sawmill Creek
Weir Details
WICHITA, KANSAS

SRB
SAVOY, RUGGLES & BOHM, P. A.
ENGINEERING & SURVEYING

PROJECT NUMBER
1119PPS (607661)

DESIGN	DRAWN	QTY	REVIEW	DATE	REVISED
CMB	EJG			May 29, 2001	

Project No. 18090
SHEET 5
6

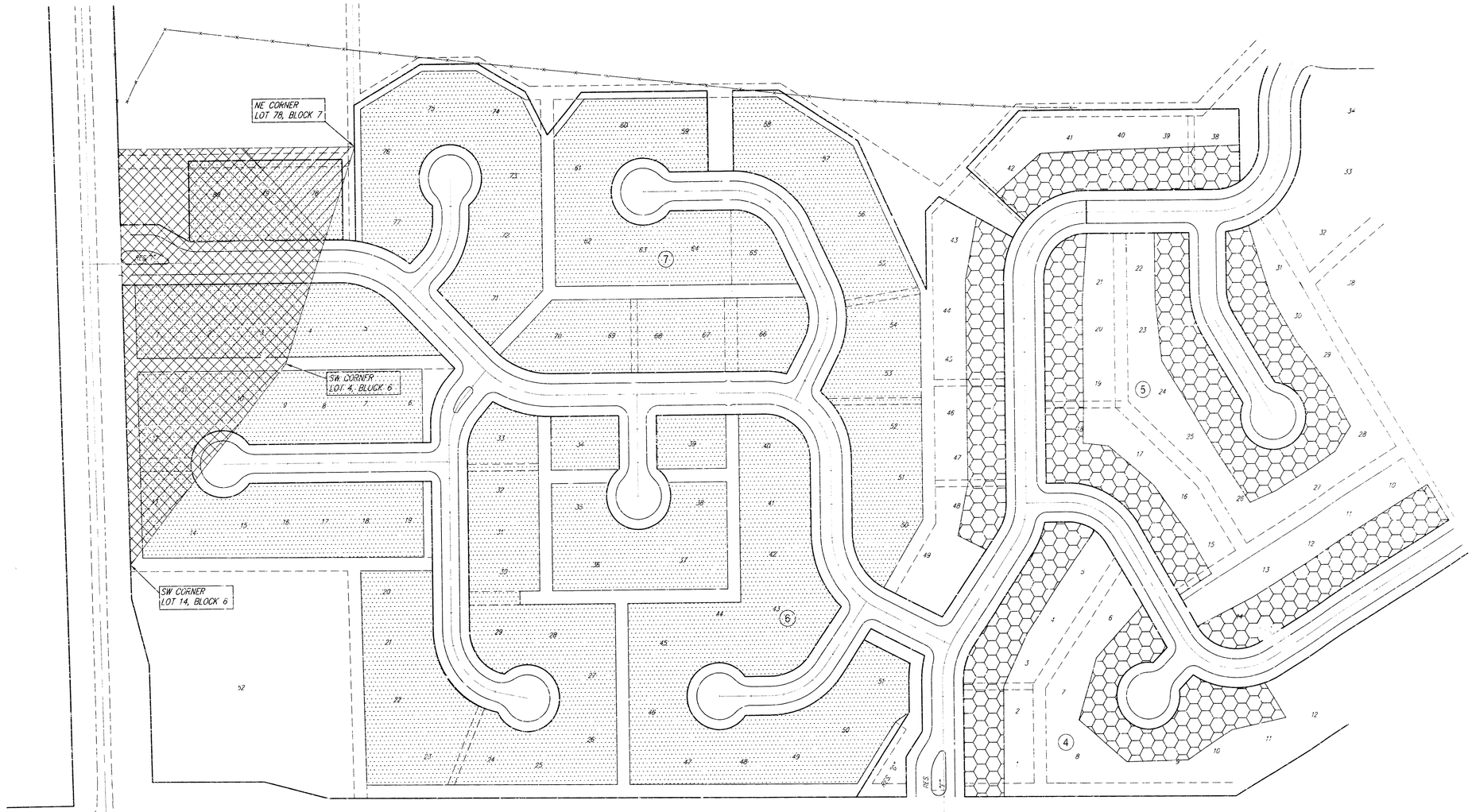

SCALE 1" = 80'
IRON = •

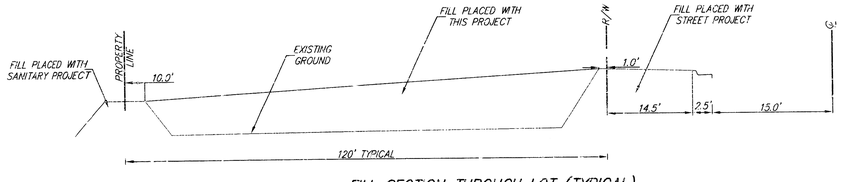

FILL SECTION THROUGH LOT (TYPICAL)

EXCAVATION PLACEMENT REQUIRES APPROXIMATELY 40000 CUBIC YARDS OF FILL. ALL REMAINING EXCAVATION SHALL BE STOCKPILED AS SHOWN
EXCESS EXCAVATION DEPTHS:
LOTS 1–5, BLOCK 4 – 2.0'
LOTS 6–11, BLOCK 4 – 4.0'
LOTS 10–14, BLOCK 5 – 4.0'
LOTS 15–31, BLOCK 5 – 3.0'
LOTS 38–42, BLOCK 7 – 3.0'
LOTS 42–48, BLOCK 7 – 2.0'

ALL FILL PLACED BELOW THE BFE ELEVATIONS SHOWN ON THE PLAN SHALL BE COMPACTED TO A MINIMUM OF 90% STANDARD DENSITY. THE PLACEMENT AND COMPACTION OF FILL PLACED BELOW THESE ELEVATIONS SHALL BE MONITORED AND TESTED BY THE ENGINEER TO THE EXTENT THAT IT CAN BE CERTIFIED TO FEMA UPON COMPLETION. FILL ABOVE THIS ELEVATION CAN BE REGARDED AS LOOSE FILL.

1378 BFE 1379 BFE

Sawmill Creek Addition
Pond Excavation Placement
WICHITA, KANSAS

SRB
SAVOY, RUGGLES & BOHM, P.A.
ENGINEERING & SURVEYING

PROJECT NUMBER
1119PPS (607861)

DESIGN	DRAWN	CHK'D	REVIEW	DATE	REVISE
CMB	EJG			May 29, 2001	

Fill Placement
SHEET 6
OF 6

10 03 01 18