STORM WATER SEWER IMPROVEMENTS

to serve

Park Elementary School

1025 North Main

CITY OF WICHITA, KANSAS

Michael E. Lindebak, P.E. City Engineer

Private Project Number

1120 PPS (007681)

Benchmark

"□" On Center North End of Curb Inlet, Found On South Bulb of Water St. Cul-de-sac.
Elev.=1116.83 (City Datum)

Sheet Index

Title Sheet	1
Line 1	2-4
Demolition Plan	5
Inlet Detail	6
Manhole Detail	7
Copy of A.L.T.A. Survey	8

Location Map

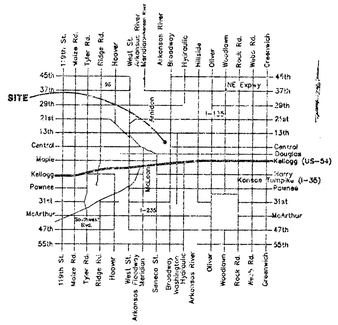

APPROVED AS NOTED
BY CITY ENGINEER OF WICHITA

Storm Sewer Julianne Kallman 5-18-01

NOTE TO CONTRACTORS

Inspection and testing for this project is to be provided by a Licensed Consulting Engineering Firm under contract with the Owner/Developer. Said Inspection to be in accordance with the City of Wichita standard construction engineering practices and certified by a Licensed Professional Engineer. No work shall be performed in dedicated easements or public right-of-way by the Contractor without such inspection nor shall any work be commenced without written authorization by the City Engineer. All Construction and Materials shall comply with the City of Wichita Specifications and Standards (on file and available in the City Engineer's Office).

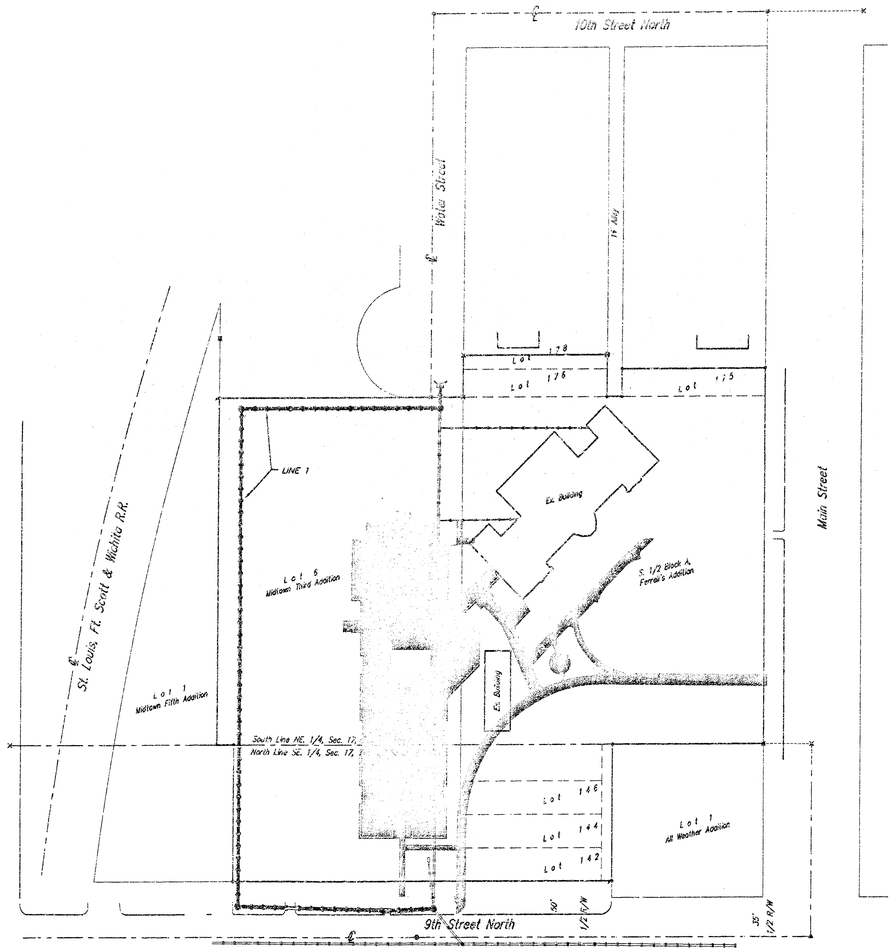

Scale: 1" = 60'

GENERAL NOTES:

1. *Contractor will be required to provide notice to utility companies a minimum of twenty-four (24) hours prior to any excavation, as follows:*

Kansas One-Call	*587-2470*

   The Contractor must notify the following in case of an emergency:

Cox Communications	*252-0851*
Kansas Gas Service	*383-8500*
Kansas Gas & Electric Company	*533-8500*
Peoples Gas Company	*942-9333*
Southwestern Bell Telephone Company	*1-800-344-7233*
City of Wichita Water Dept.	*268-4928*
City of Wichita Traffic Engineering	*268-4446*

2. *Underground utility service lines and overhead utility pole lines are to be adjusted as necessary by others prior to construction unless the plans specifically call for their adjustment by the Contractor or unless the plans specifically identify a utility to be adjusted by its owner during construction. Existing utilities and their location, as shown on the plans, represent the best information obtainable for design. The Contractor will be required to work around existing utilities within the right-of-way which do not conflict with proposed construction.*

3. *Contractor shall not start work on the project until the project inspector is assigned to the project and is present on the site. Any work done without inspection will be required to be uncovered for inspection.*

4. *All disturbed R/W areas not intended for pavement or sidewalk construction shall be seeded with Kansas Premium Fescue Blend at a rate of 8 lb./1000 Sq. Ft., fertilized with a 16-20-6 ratio at a rate of 4 lb./1000 Sq. Ft., and mulched with Prairie Hay at a rate of 92 lb./1000 Sq. Ft. Mulch shall be "potted" with forks or punched into soil to reduce loss due to wind.*

5. *The Contractor shall give all property owners and/or tenants of developed property abutting the construction of this project a minimum of ten (10) days advance notice prior to start of construction.*

6. *The Contractor shall be responsible for preserving property irons. The Contractor will be required to re-establish any property irons which are damaged or destroyed by his construction operations. Such irons shall be reestablished by a licensed land surveyor in accordance with state laws.*

7. *Rubble from the removal of miscellaneous structures and excess excavation which is to be wasted shall be disposed of on sites to be provided by the Contractor. These sites shall be approved by the Engineer as to suitability, appearance and site location. Locations that, in the opinion of the Engineer, will leave an unsightly appearance will not be approved. All disposal sites must be approved by the Kansas Department of Health and Environment. Material either stockpiled or disposed of in a flood plain would require a Kansas State Board of Agriculture permit. Any material dumped in waters of the United States or wetlands is subject to U.S. Corps. of Engineers permitting regulations. Any material buried or stockpiled beyond approved construction limits would require additional archaeological investigations unless buried in a previously approved borrow location.*

8. *Cuts made to paved surfaces on public property will be repaired by the City's contractor and charged against the owner/applicant. Unit repair prices are available from the City at 268-4418. A surcharge may be applicable; call 268-4418 for details. Repair costs to be paid prior to release of sewer service if sewer service is affected. Contractor shall obtain permit prior to construction.*

9. *Contractor shall provide geotechnical services through Terracon for all testing necessary for fill placed in the location of the removed 18" SWS line. Contact Kent Schwieger at 262-0171 for a proposal.*

A.B. 8/01 KK

R. BRENT WOOTEN LICENSED KANSAS PROFESSIONAL ENGINEER

05/07/2001

BAUGHMAN COMPANY P.A.
ENGINEERING, SURVEYING, & PLANNING
316-262-7271 • 315 ELLIS • WICHITA, KANSAS 67211
P:\ENG\PARKELEM\SWSCOV.DWG SCL

18 14 05 02

BENCHMARK:
"□" On Center North End of Curb Inlet, Found On South Bulb of Water St. Cul-de-sac. Elev.=116.83 (City Datum)

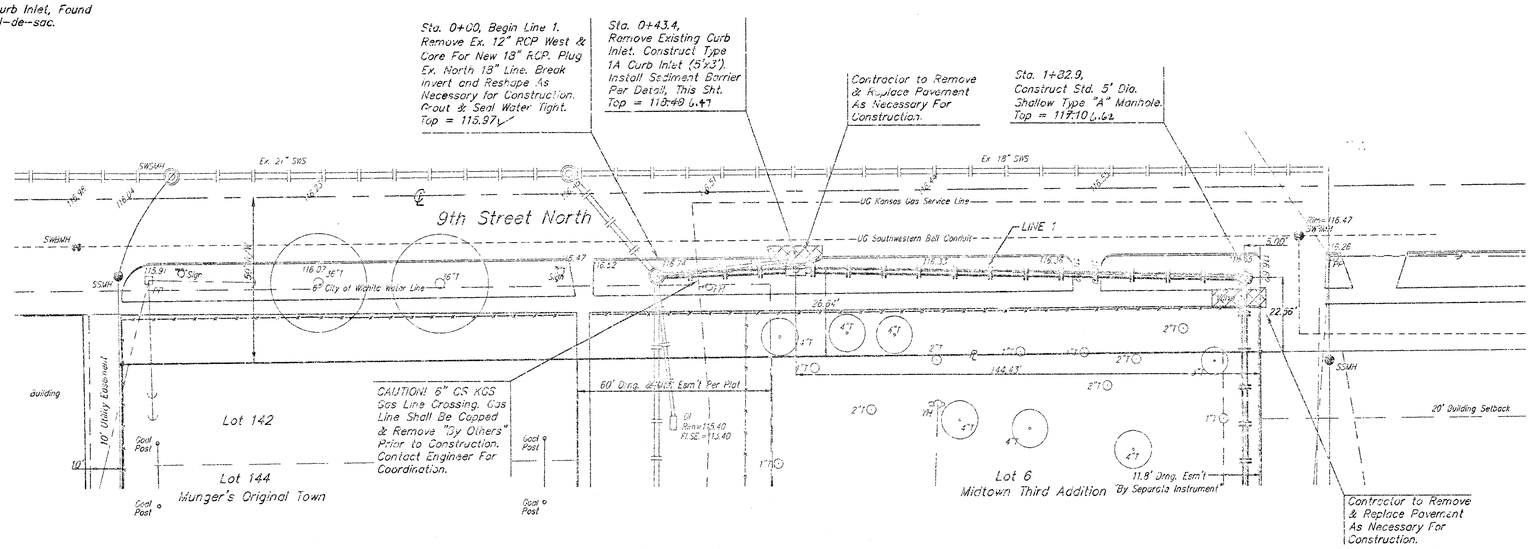

SCALE:
1" = 20' HORIZONTAL
1" = 5' VERTICAL
• = IRON

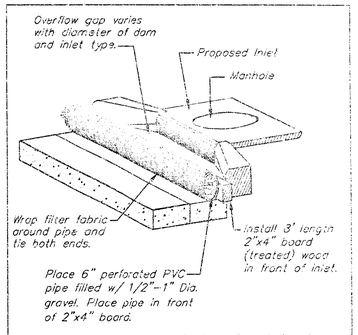

INLET PROTECTION

Perforated Pipe w/ Gravel

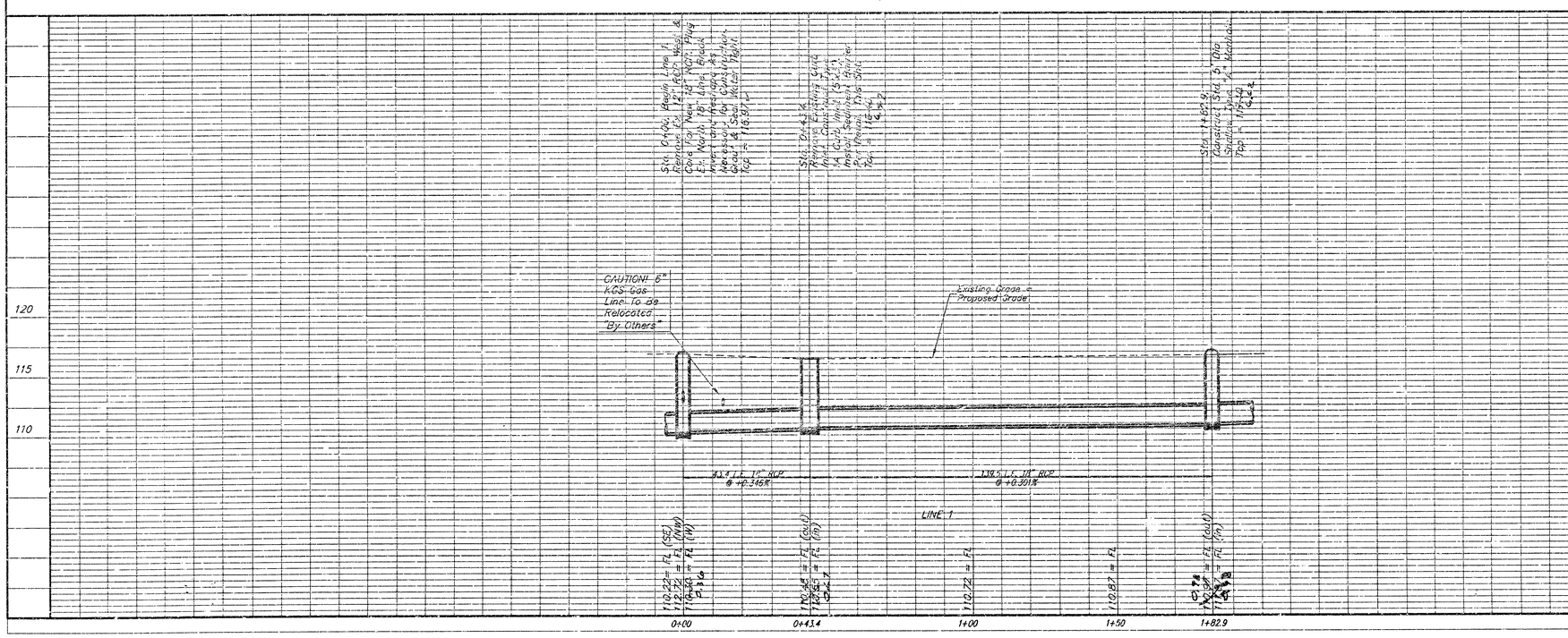

A. B. 8/01 KK

STORM WATER SEWER TO SERVE
PARK ELEMENTARY SCHOOL
CITY OF WICHITA

BAUGHMAN COMPANY P.A.
ENGINEERING, SURVEYING, & PLANNING
316-262-7271 • 315 ELLIS • WICHITA, KANSAS 67211

PROJECT NUMBER					SHEET 2 OF 8
DESIGN SCL	DRAWN SCL	APPROVED NBW	DATE 5/01	SCALE NOTED	

60-12-E.003
/swa-1.dwg

BENCHMARK:
"□" On Center North End of Curb Inlet, Found
On South Bulb of Water St. Cul-de-sac.
Elev.=116.83 (City Datum)

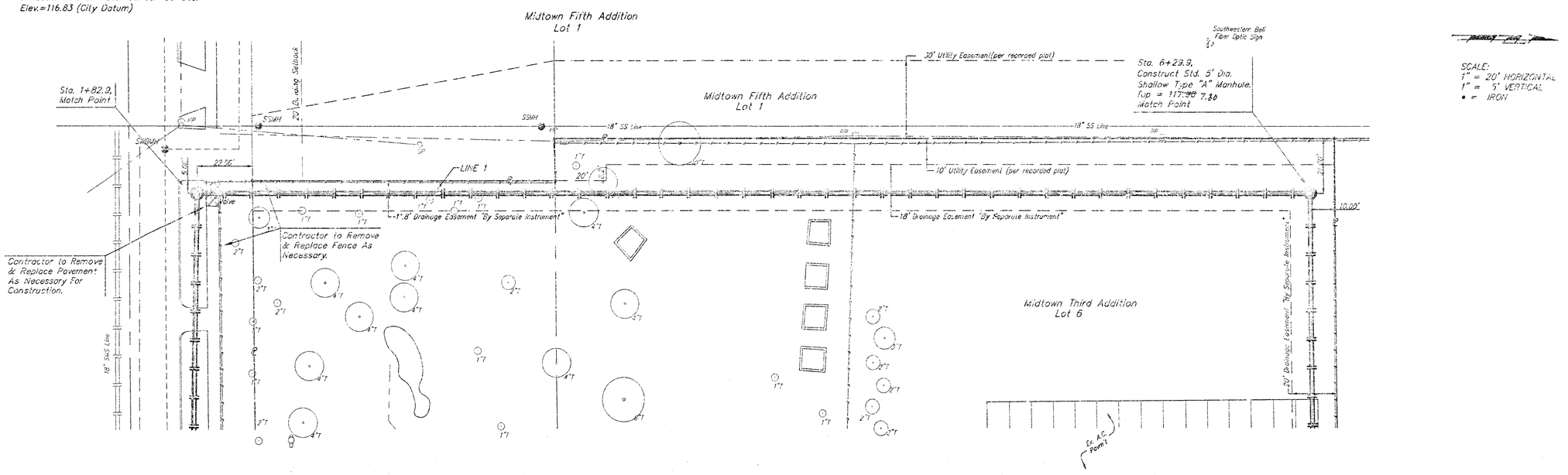

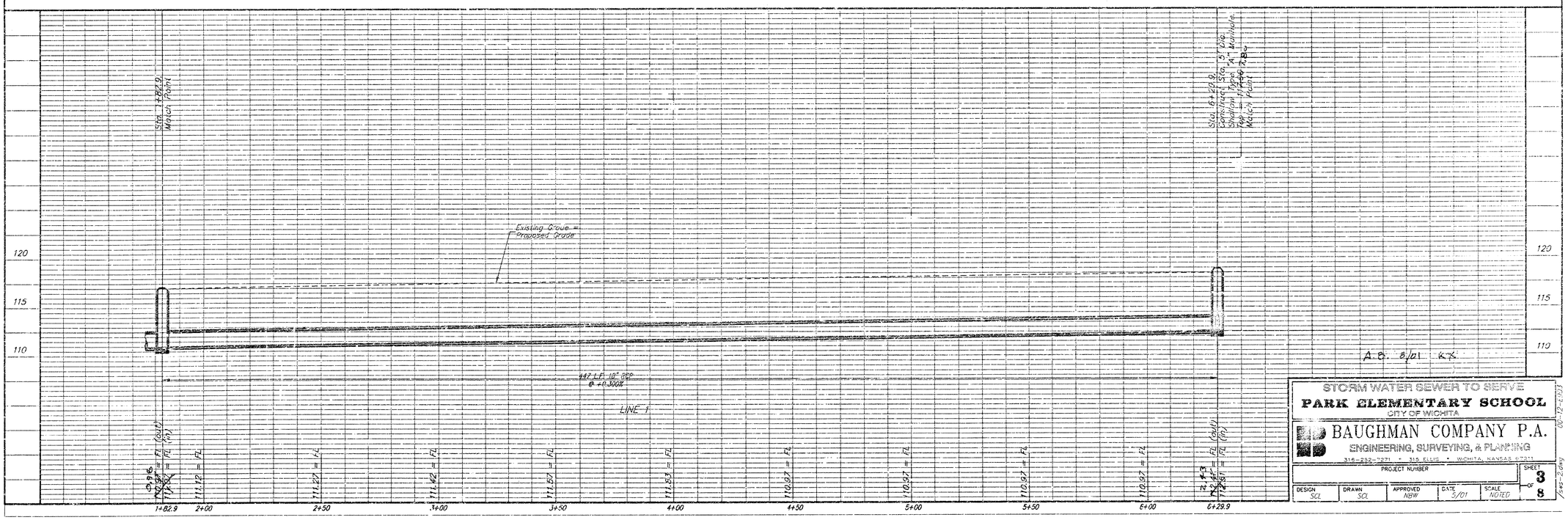

STORM WATER SEWER TO SERVE
PARK ELEMENTARY SCHOOL
CITY OF WICHITA

BAUGHMAN COMPANY P.A.
ENGINEERING, SURVEYING, & PLANNING
316-262-7271 • 315 ELLIS • WICHITA, KANSAS 67211

PROJECT NUMBER				SHEET 3 OF 8
DESIGN SCL	DRAWN SCL	APPROVED NBW	DATE 5/01	SCALE NOTED

00-12-E103

BENCHMARK:
"□" On Center North End of Curb Inlet, Found On South Bulb of Water St. Cul-de-sac.
Elev.=116.83 (City Datum)

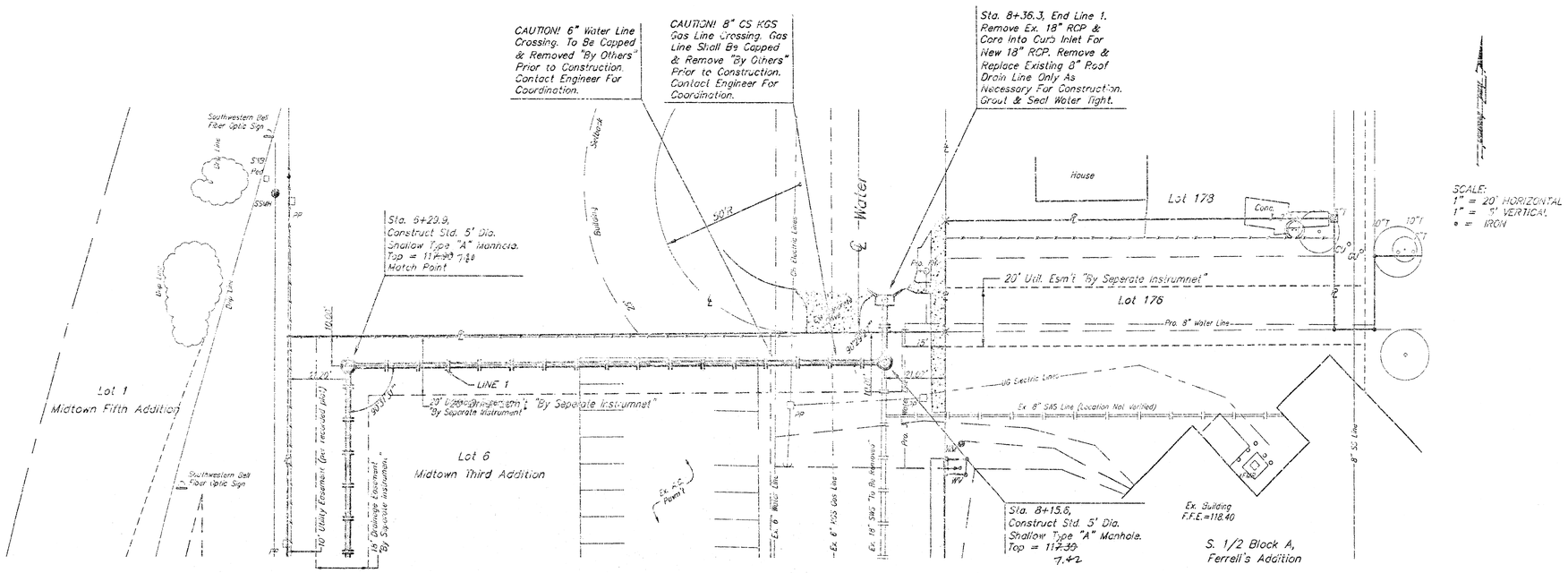

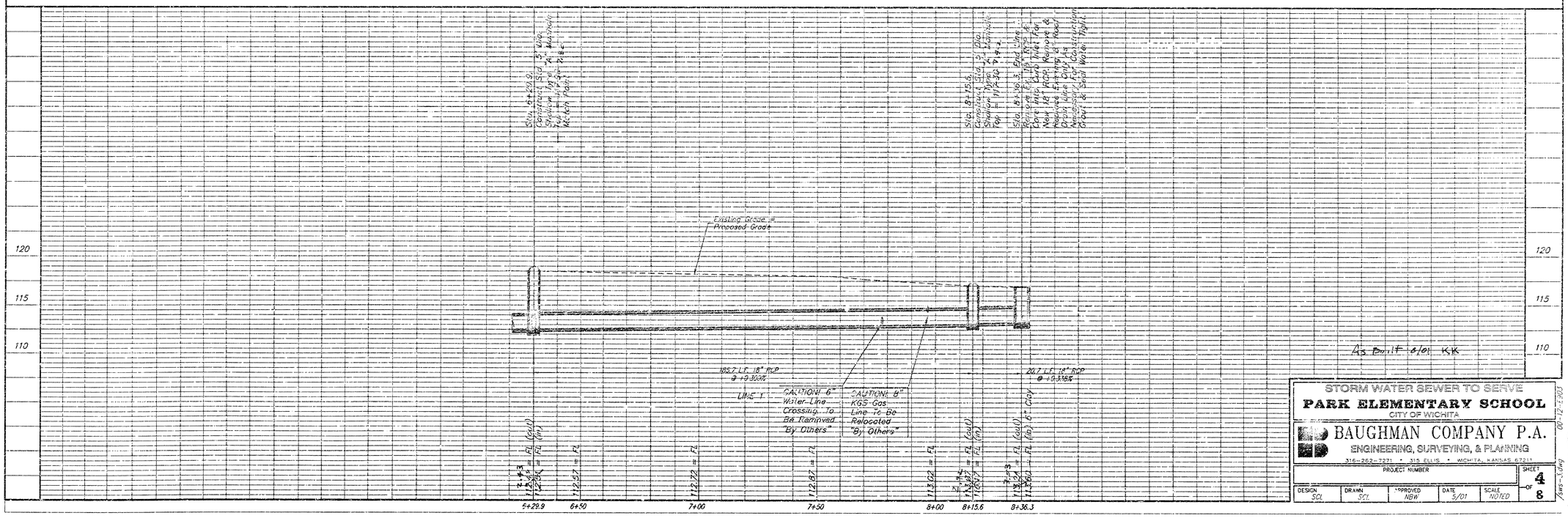

As Built 6/01 KK

STORM WATER SEWER TO SERVE
PARK ELEMENTARY SCHOOL
CITY OF WICHITA

BAUGHMAN COMPANY P.A.
ENGINEERING, SURVEYING, & PLANNING
316-262-7271 • 315 ELLIS • WICHITA, KANSAS 67211

PROJECT NUMBER				SHEET 4 OF 8
DESIGN SCL	DRAWN SCL	APPROVED NBW	DATE 5/01	SCALE NOTED

00-12-2903
/swp-1.dwg

BENCHMARK:
"□" On Center North End of Curb Inlet, Found On South Bulb of Water St. Cul-de-sac.
Elev.=116.83 (City Datum)

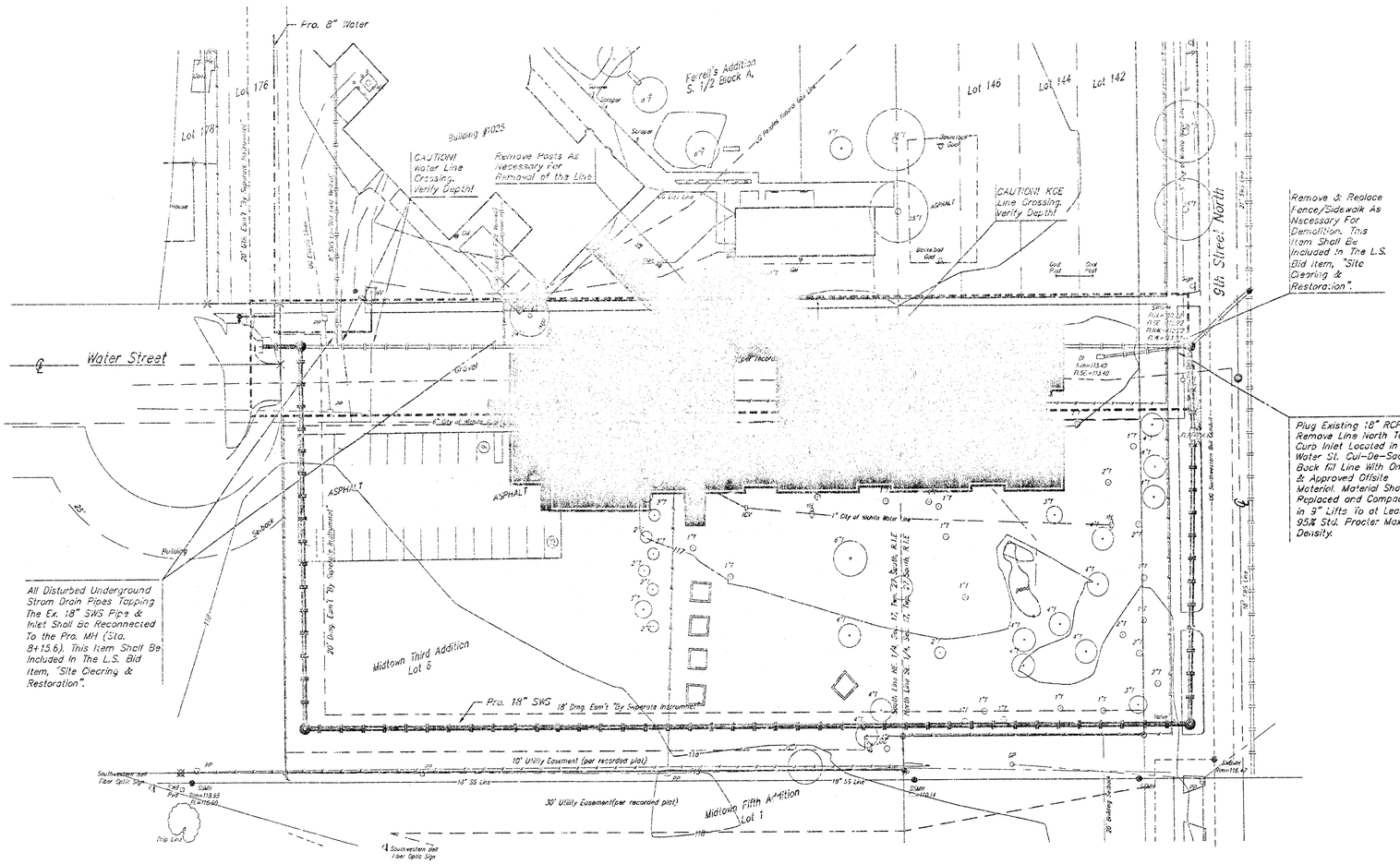
Fnd. 8" Water
Lot 176
Lot 178
Lot 146
Lot 144
Lot 142
Ferrell's Addition S. 1/2 Block A
Building #1025
CAUTION! Water Line Crossing. Verify Depth!
Remove Posts As Necessary For Removal of the Line
CAUTION! KGE Line Crossing. Verify Depth!
Remove & Replace Fence/Sidewalk As Necessary For Demolition. This Item Shall Be Included In The L.S. Bid Item, "Site Clearing & Restoration".
9th Street North
Water Street
ASPHALT
Gravel
Building
Sidewalk
Midtown Third Addition Lot 6
Midtown Fifth Addition Lot 1
Pro. 18" SWS 18' Drng. Esm't "By Separate Instrument"
10' Utility Easement (per recorded plat)
30' Utility Easement(per recorded plat)
16" SS Line
19" SS Line
Plug Existing 18" RCP & Remove Line North To The Curb Inlet Located in Water St. Cul-De-Soc. Back fill Line With Onsite & Approved Offsite Material. Material Shall Be Replaced and Compacted in 9" Lifts To at Least 95% Std. Proctor Max. Density.
All Disturbed Underground Strom Drain Pipes Tapping The Ex. 18" SWS Pipe & Inlet Shall Be Reconnected To the Pro. MH (Sta. 8+15.6). This Item Shall Be Included In The L.S. Bid Item, "Site Clearing & Restoration".
Southwestern Bell Fiber Optic Sign
Inlet
Curb Inlet
Manhole
Power Pole
Guy Anchor
Tree
Water Meter
Water Valve
Transformer
Yard Hydrant(typical)
Downspout
Gas Post
Electrical Box
Sign
Bench
Trash Can
Flag Pole
Basketball Goal
Soccer Goal
Pond
Fence
Curb Line
Edge of Asphalt
Edge of Gravel
Top of Bank
Toe of Slope
Drainage Flow Line
Sanitary Sewer Line
Water Line
Gas Line
Overhead Utility Line
Underground Telephone Line
Underground Electric Line
Underground Cable TV Line
Fiber Optic Line
Chain Link Fence
Wood Fence
Concrete
Asphalt
Gravel
Building Setback
Utility Easement
Drainage Easement
Property Line
Section Line
1/4 Section Line
1/16 Section Line
Lot Line
Block Line
Subdivision Boundary
Existing Contour
Proposed Contour
Flow Direction
Slope
Inlet Elev.=113.95
Flow=113.60
Inlet Elev.=113.40
Flow=113.40
Inlet Elev.=113.14
Manhole Elev.=116.47
Manhole Elev.=116.83
Curb Inlet Elev.=113.83
Flow=113.43
Curb Inlet Elev.=113.40
Flow=113.40
Curb Inlet Elev.=113.14
Flow=113.14

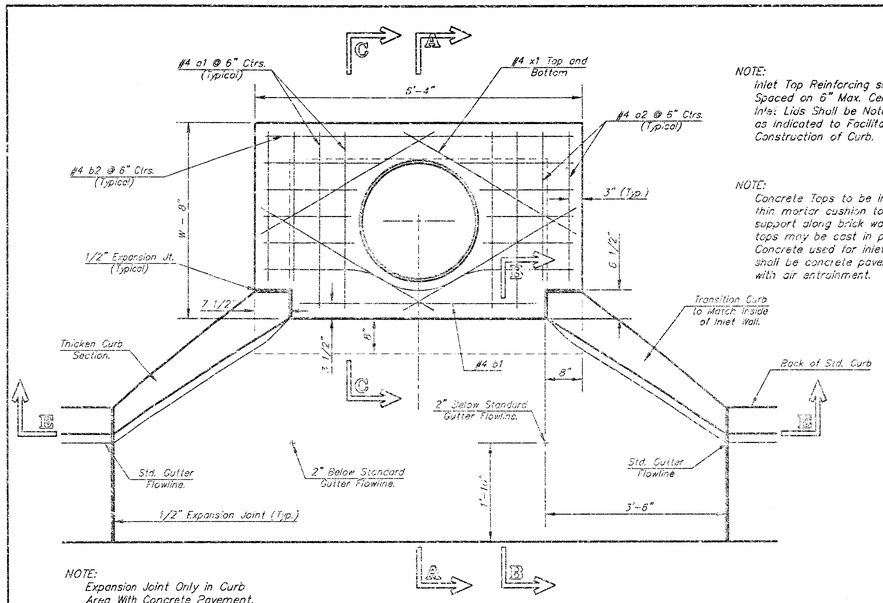

NOTE:
Expansion Joint Only in Curb Area With Concrete Pavement.

PLAN

NOTE:
Inlet Top Reinforcing shall be Spaced on 6" Max. Centers. Inlet Lids Shall be Notched Out as Indicated to Facilitate Construction of Curb.

NOTE:
Concrete Tops to be installed on thin mortar cushion to insure full support along brick walls. Concrete tops may be cast in place or precast. Concrete used for inlet construction shall be concrete pavement mix with air entrainment.

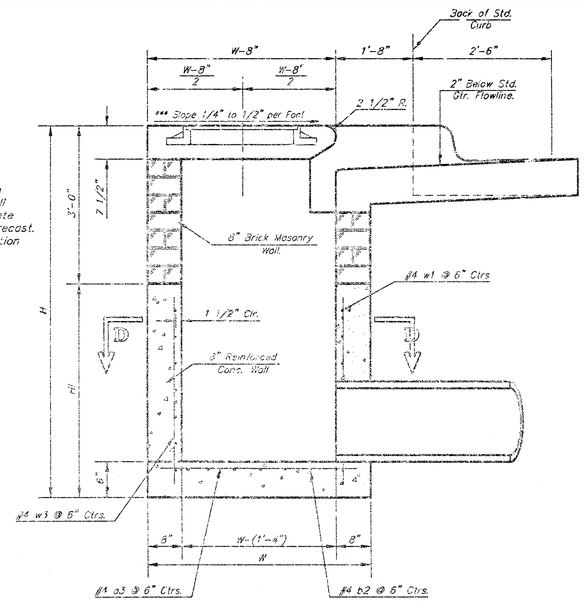

SECTION A-A

***NOTE: Slope of inlet tops to Match Sidewalk or Parking Slopes within Limits Indicated.

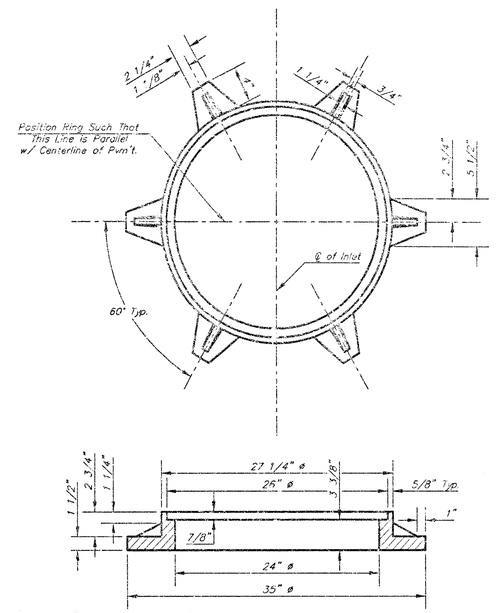

MANHOLE RING AND COVER
Weight = 180 Lbs.

*See City of Wichita Standard Manhole Ring and Cover Detail Sheet for Cover Details to Be Used With Inlet Frame.

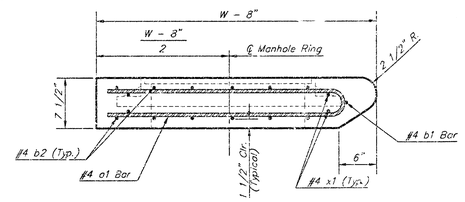

SECTION C-C

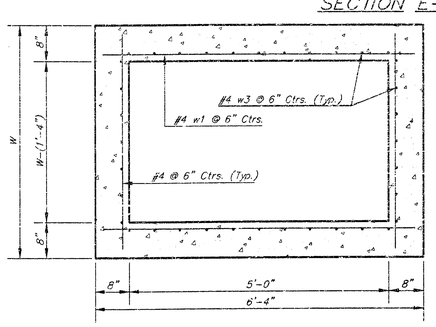

SECTION D-D

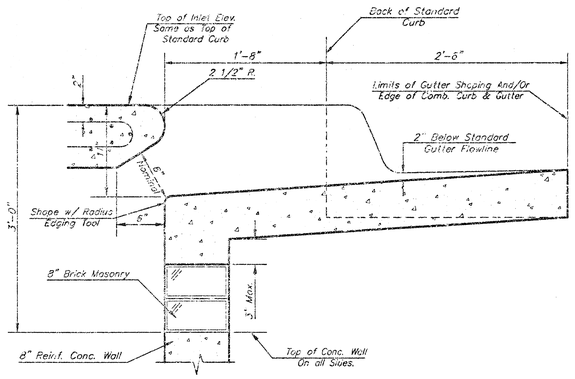

SECTION B-B

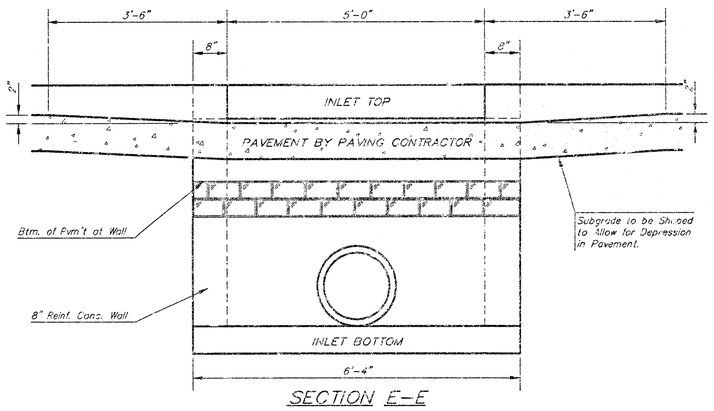

SECTION E-E

NOTE: Contractor shall have the option of constructing 8" brick masonry walls between the concrete inlet base and top on this inlet when W=5'-4" and H=7'-0" or less.

Additional curb and gutter construction necessary to connect set-back inlet to pavement will be paid for at the unit price bid for each inlet hookup.

Inlet invert shall be shaped with B sack sand mix concrete to create flow channels and to increase hydraulic efficiency such that the inlet will be self-cleaning between all inlet and/or outlet pipes.

The ends of all pipes installed in inlets shall be cut off flush with the inside face of the inlet wall

PRECAST SLAB AND FLOOR REINFORCING

		W = 4'-4"		W = 5'-4"		W = 6'-4"		W = 7'-4"		W = 8'-4"	
MARK	SIZE	NO.	LENGTH	NO.	LENGTH	NO.	LENGTH	NO.	LENGTH	NO.	LENGTH
* a1	#4	6	6'-7"	6	8'-7"	5	10'-7"	5	12'-7"	6	14'-7"
a2	#4	4	6'-0"	4	8'-0"	4	10'-0"	4	12'-0"	4	14'-0"
a3	#4	13	4'-1"	13	5'-1"	13	6'-1"	13	7'-1	13	8'-1"
b1	#4	1	4'-9"	1	4'-9"	1	4'-9"	1	4'-9"	1	4'-9"
* b2	#4	23	6'-1"	29	6'-1"	35	6'-1"	41	6'-1"	47	6'-1"
x1	#4	8	3'-10"	8	4'-2"	8	4'-6"	8	4'-10"	8	5'-2"

WALL REINFORCING

		W = 4'-4"		W = 5'-4"		W = 6'-4"		W = 7'-1"		W = 8'-4"	
MARK	SIZE	NO.	LENGTH	NO.	LENGTH	NO.	LENGTH	NO.	LENGTH	NO.	LENGTH
w1	#4	①	6'-1"	①	6'-1"	①	6'-1"	①	6'-1"	①	6'-1"
w2	#4	①	4'-1"	①	5'-1"	①	6'-1"	①	7'-1"	①	8'-1"
w3	#4	32	②	36	②	40	②	44	②	48	②

* Field Bend or Cut Reinforcing as Required for Clearance.
① 4 (Ht - 12") (Ht - 21") Rounded down to nearest 0.5'
② Ht - 3"

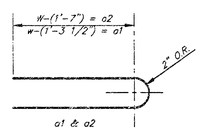

BENDING DIAGRAM

STANDARD CURB INLET PRECAST TOPS

W	PRE-CAST TOP SIZE	PIPE SIZE	CU. YD. CONC.
4'-4"	3'-8" x 6'-4" x 7 1/2"	21" & SMALLER	0.38±
5'-4"	4'-8" x 5'-4" x 7 1/2"	24" & 30"	0.51±
6'-4"	5'-8" x 6'-4" x 7 1/2"	36" & 42"	0.64±
7'-4"	6'-8" x 6'-4" x 7 1/2"	48" & 54"	0.77±
8'-4"	7'-8" x 6'-4" x 7 1/2"	60" & 66"	0.90±

Revised - Feb. 16, 1989

CITY OF WICHITA STANDARD TYPE 1A

Curb Inlet Details

INLET OPENING = 8" X 5'-0"

BAUGHMAN COMPANY P.A.
ENGINEERING, SURVEYING, & PLANNING
316-262-7271 • 315 ELLIS • WICHITA, KANSAS 67211

PROJECT NUMBER

SHEET 6 OF 8

DESIGN	DRAWN	APPROVED	DATE	SCALE
C.O.W.	Staff			None

00-12-E903

Type1A-S

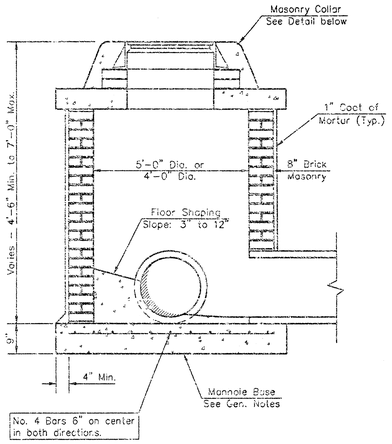

SHALLOW TYPE "A" MANHOLE

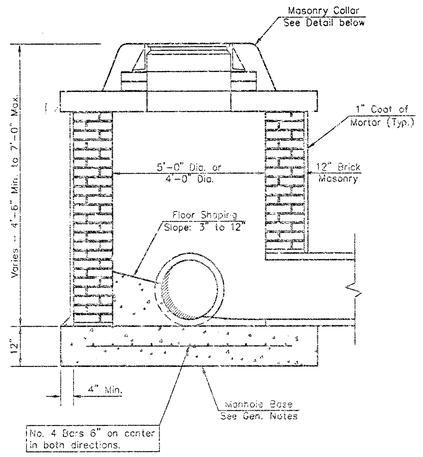

SHALLOW TYPE "B" MANHOLE

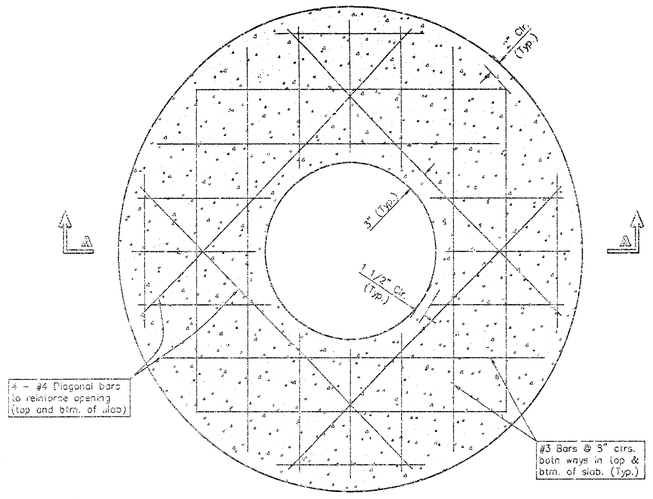

PLAN

GENERAL NOTES

1. Mortar used in masonry construction shall contain 8 sacks of cement per cubic yard. Concrete used in manhole bases shall conform to the requirements of concrete for concrete pavement construction as specified in the city standard paving specifications using city concrete cement mix without air entraining admixture. Mortar shall be placed around the manhole ring as shown on the drawings when manholes are constructed in unpaved areas. Type "A" shallow manholes can be used on sewers when the manhole is not located within public street pavement. Manholes constructed where pipe sizes are smaller than 24" shall have an inside diameter of 4'. Manholes constructed where pipe sizes are 24" or larger shall have an inside diameter of 5'. Completed manhole shall be without leaks and water tight.

2. Reinforcing steel shall be installed in the manhole bases and shall consist of no. 4 bars placed on 6" centers in both directions. The manhole base reinforcement shall be placed 6" above the bottom of the manhole base. All costs for furnishing and installing reinforcing steel shall be included in the unit price bid for the manhole.

3. The floors of all manholes shall be shaped with flow channels such that the manholes will be self cleaning and free of areas where solids could be deposited as sewage flows through the manhole from all inlet pipes to the outlet pipe. Flow channels shall be formed to match the bottom halves of the inflowing pipes and the outflowing pipe as shown by the drawings. Manhole floors shall have slopes of 3 inches per foot in the areas outside of the flow channels sloped toward the flow channels. Pipes laid through manholes shall have the top half removed to neat lines for the full inside diameter of the manhole. Manhole floors shall then be shaped around the bottom half of the pipe which forms the flow channel.

4. Pipes installed within the excavation made for the manhole shall be cradled with concrete to the limits of the manhole excavation. When clay pipe is used, the cradle shall extend to the first joint outside the manhole. The cradle shall be terminated at the clay pipe joint in a manner which will maintain the flexibility of the joint. Cost of cradle within manhole excavation or to clay pipe joints adjacent to manhole shall be included in the unit price bid for the manhole.

5. Manhole cover castings and manhole frame castings shall conform to the requirements as indicated in the standard specifications and as shown in the standard detail drawings.

6. The crowns of inflowing pipes shall never be set lower than the crown of the outflowing pipe.

7. Standard shallow manholes type "A" and "B" shall be paid for at the unit price bid per each for the type and diameter indicated. Standard special shallow manholes type "A" and "B" shall be paid for at the unit price bid per each for the type indicated. All standard shallow manhole diameters will be 4' unless indicated otherwise.

8. All brick used in manhole construction shall meet Grade SW of ASTM C652 or C62-87.

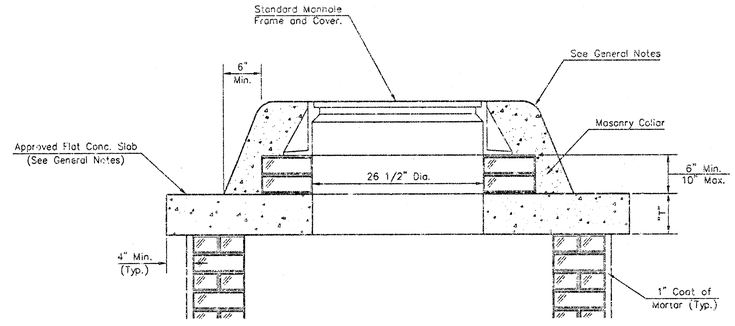

MASONRY COLLAR DETAIL

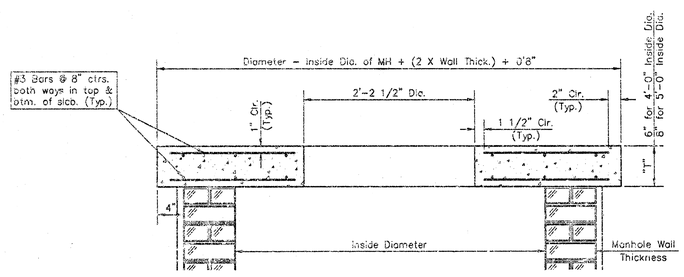

SECTION A-A

FLAT CONCRETE SLAB DETAILS

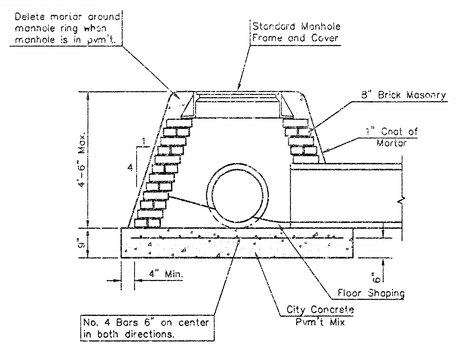

SPECIAL SHALLOW TYPE "A" MANHOLE

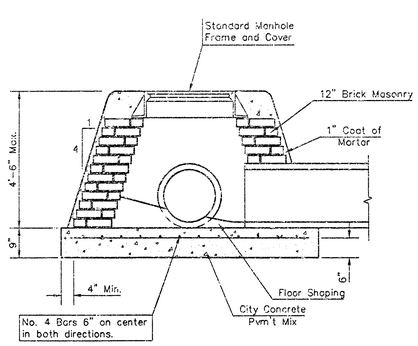

SPECIAL SHALLOW TYPE "B" MANHOLE

CITY OF WICHITA, KANSAS

Std. Manhole Detail

TYPE "A" AND TYPE "B"

00-12-1961

BAUGHMAN COMPANY P.A.
ENGINEERING, SURVEYING, & PLANNING
316-262-7271 • 315 ELLIS • WICHITA, KANSAS 67211

PROJECT NUMBER

SHEET 7 OF 8

DESIGN	DRAWN	APPROVED	DATE	SCALE
C.O.W.	Staff			NONE

Silvernail

Park Elementary School
1025 North Main, Wichita, Kansas
Architectural Survey

nsas)
)SS
Sedgwick)

January 22, 2001

man Company, P.A., Surveyors in aforesaid county and state do hereby certify that, under ion of the undersigned, we did on this 22nd day of January, 2001, perform a survey of the

Half of Block A, Ferrell's Addition to the City of Wichita, Kansas, Sedgwick County, Kansas.

nd 144, on Church now Water Street, in Munger's Original Town of Wichita, Sedgwick County, nether with the West Half of the vacated alley adjoining said Lots on the East.

n Church now Water Street, in Munger's Original Town of Wichita, Sedgwick County, Kansas, actional Lot adjoining said Lot 146 on the North described as a part of the Southeast Section 17, Township 27 South, Range 1 East of the Sixth Principal Meridian, Sedgwick nsas described as follows: Beginning at the Northeast corner of Lot 146, on Church now et, in the Original Town (now City) of Wichita, as platted by D.S. Munger; thence South to est corner of Lot 146; thence East along the North line of said Lot 146 to place of in Sedgwick County, Kansas; together with the West Half of the vacated alley adjoining said d said fractional Lot on the East.

town Third Addition, Wichita, Sedgwick County, Kansas.

nd the South Half of Lot 178, on Water Street, in Robertson's Subdivision of the North Half in Ferrell's Addition to the City of Wichita, Sedgwick County, Kansas.

n Main Street, in Robertson's Subdivision of the North Half of Block A in Ferrell's Addition to Wichita, Sedgwick county, Kansas.

ing is a true and correct exhibit of said survey based on actual measurements where the s are of the character and occupy the positions as indicated. There are no encroachments parcel by buildings on the adjacent parcels.

Surveyor — L.S. 876 — 1-23-01 Date

KANSAS LAND SURVEYOR

NOTES:
1. The utility locations represented on this survey were compiled by both field observation and informa from the various utility companies. If any construction or relocation is planned for this site the variou utility companies should be requested to verify their locations in the field prior to final design or construction. Any utilities not shown are due to no response to Kansas One Call "1-800-DIG-SAFE" ticket no. 175419
2. Subject property contains 211,591.1 Square Feet, or 4.857 Acres.
3. According to scaled location on FEMA FIRM 200328 0025 b, effective date May 15, 1985 subject property lies within Zone B.
4. Subject property is presently Zoned "B"(Multi-Family).
5. The City of Wichita Building Inspection and the Metropolitan Planning Department needs to be contacted to determine if there are any requirements to receive a building permit for subject property.

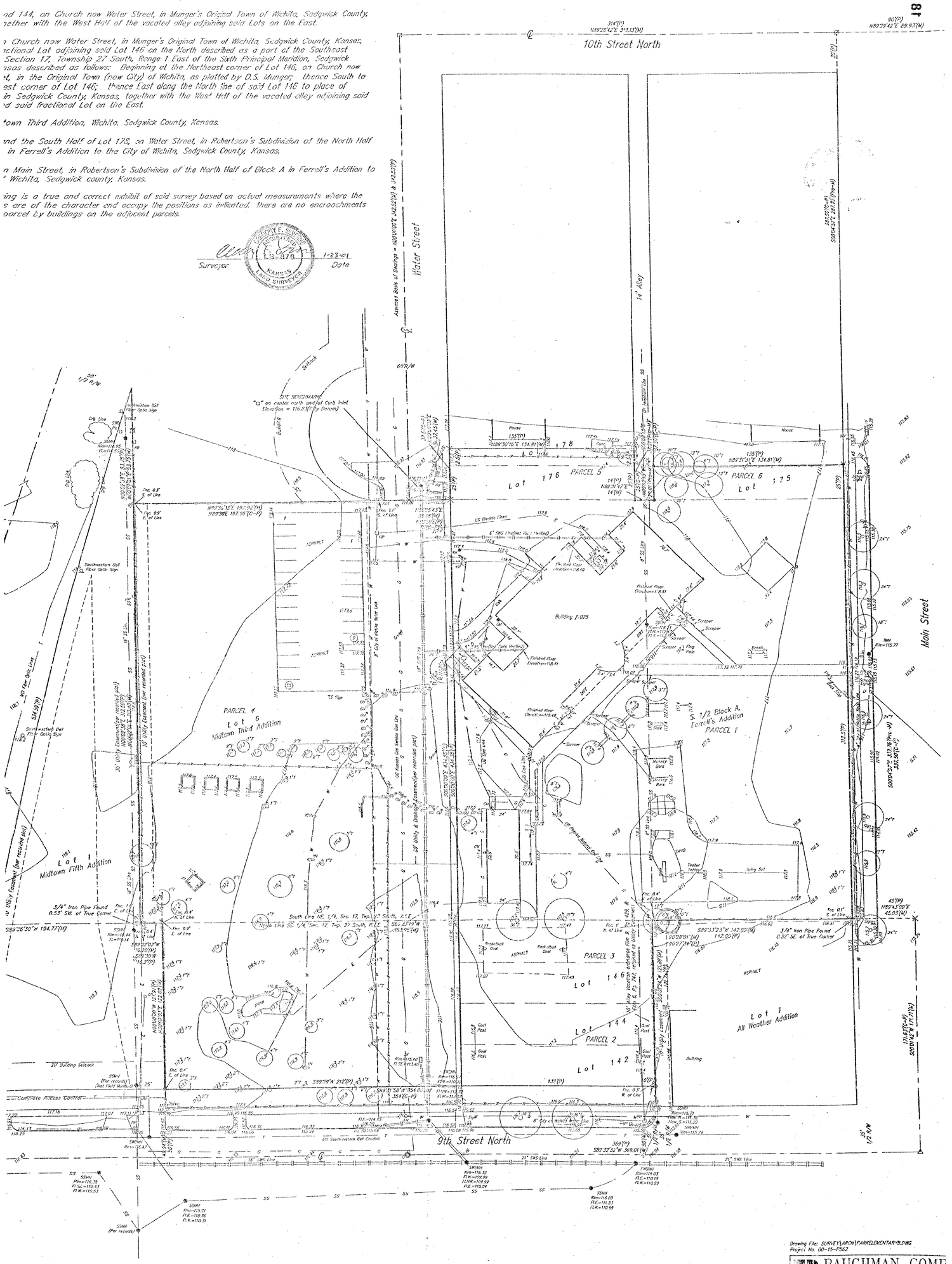

Drawing File: SURVEY\ARCH\PARKELEMENTARY5.DWG
Project No. 00-15-P562

BAUGHMAN COMP
ENGINEERING, SURVEYING,
316-262-7271 • 313 ELLIS • WICH