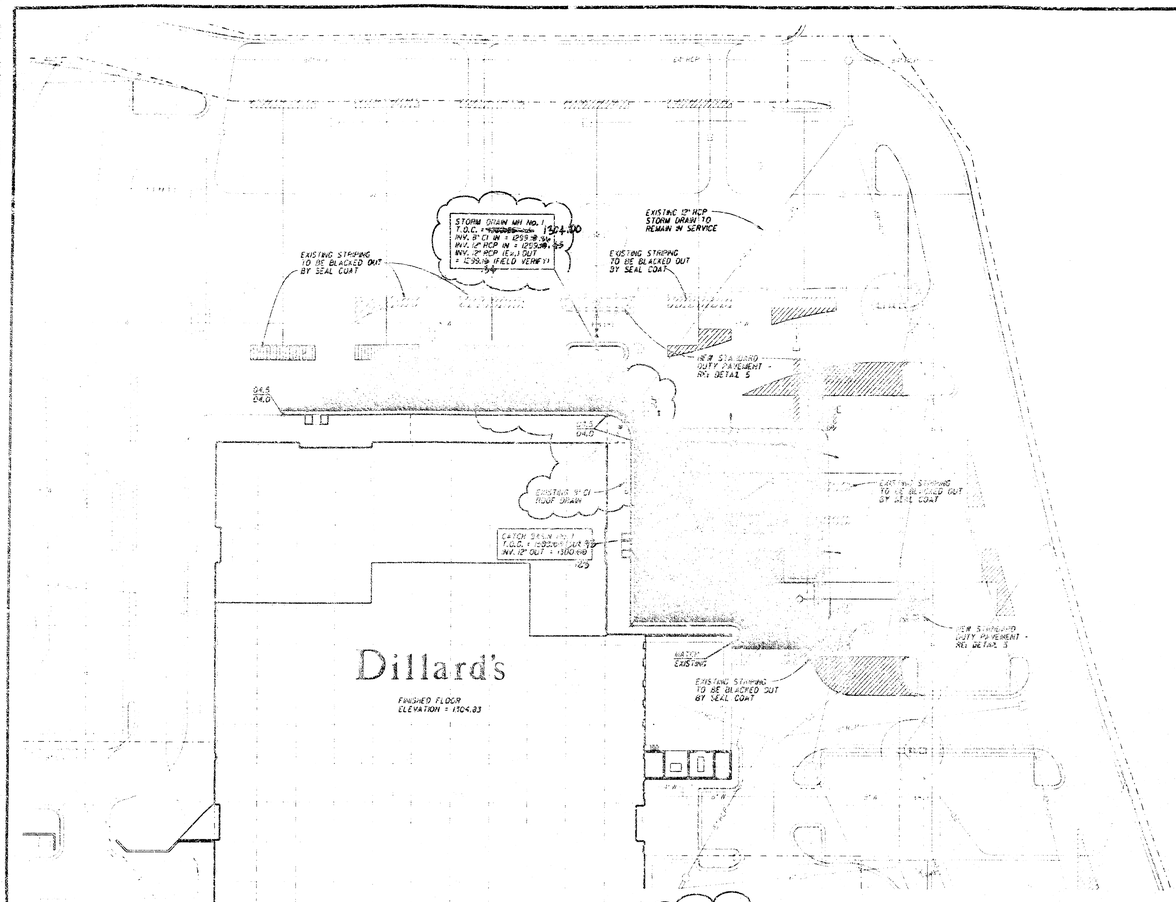

City of Wichita Private Project No. 1145PPS (607861)

STORM WATER SEWER PLAN

SCALE: 1" = 40'

REVISED AS BUILT 10-24-01 JCR

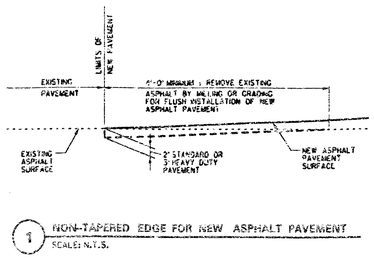

1 NON-TAPERED EDGE FOR NEW ASPHALT PAVEMENT

SCALE: N.T.S.

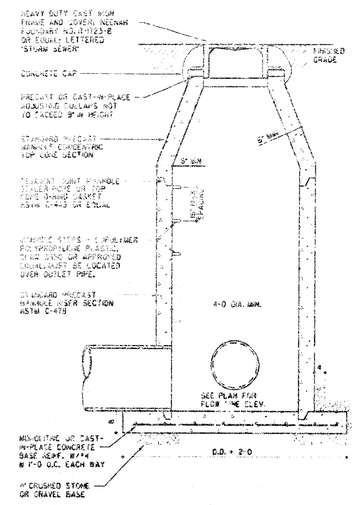

2 STANDARD STORM SEWER PRECAST MANHOLE

SCALE: 1/2" = 1'-0"

CONSTRUCTION NOTES

EROSION AND SEDIMENT CONTROL NOTES :

1. GRADING CONTRACTOR SHALL COMPLY WITH ALL STATE AND LOCAL SEDIMENT CONTROL AND AIR POLUTION ORDINANCES OR RULES.
2. THE GRADING CONTRACTOR SHALL USE WHATEVER MEASURES ARE REQUIRED TO PREVENT SILT AND CONSTRUCTION DEBRIS FROM FLOWING ONTO ADJACENT PROPERTIES. CONTRACTOR SHALL COMPLY WITH ALL LOCAL EROSION, CONSERVATION, AND SILTATION ORDINANCES. CONTRACTOR SHALL REMOVE ALL TEMPORARY EROSION CONTROL STRUCTURES UPON COMPLETION OF PERMANENT DRAINAGE FACILITIES AND CESSATION OF SOIL DISTURBING ACTIVITIES.
3. HAY BALES SHALL BE STAKED AROUND THE NEW CATCH BASIN TO PROHIBIT SILT FROM ENTERING THE STORM SEWER SYSTEM. TEMPORARY SILT FENCING MAY BE REQUIRED TO CONTAIN SILT WITHIN THE CONSTRUCTION AREA. EROSION CONTROL DEVICES ARE TO BE INSTALLED PRIOR TO START OF GRADING OPERATIONS. CONTRACTOR SHALL MAINTAIN ALL TEMPORARY EROSION CONTROL DEVICES AND SHALL REMOVE SILT AS NEEDED.
4. GRADING CONTRACTOR SHALL TAKE ALL AVAILABLE PRECAUTIONS TO CONTROL DUST. CONTRACTOR SHALL CONTROL DUST BY SPRINKLERING OR BY OTHER METHODS.

SITE GRADING & STORM DRAINAGE NOTES:

1. STORM DRAINAGE CONSTRUCTION SHALL BE IN ACCORDANCE WITH THE STANDARDS AND SPECIFICATIONS OF THE CITY OF WICHITA DEPARTMENT OF PUBLIC WORKS.
2. ALL SITE STORM DRAINAGE MATERIALS SHALL BE INSPECTED AND APPROVED BY THE CITY OF WICHITA.
3. SITE GRADES AND STORM DRAINAGE FACILITIES INDICATED ON THE PLANS WERE ESTABLISHED FROM ORIGINAL MALL SITEWORK CONSTRUCTION DRAWINGS AND HAVE NOT BEEN VERIFIED BY TOPOGRAPHIC SURVEY. CONTRACTOR SHALL FIELD VERIFY EXISTENCE, LOCATION, AND ELEVATIONS OF DRAINAGE FACILITIES AND EXISTING GRADES PRIOR TO CONSTRUCTION.
4. IT IS THE PROJECT INTENT FOR THE CONTRACTOR TO VERIFY AND MATCH EXTING CONDITIONS UNLESS NOTED OTHERWISE. CONTRACTOR SHALL NOTIFY ENGINEER OF ANY ITEMS THAT DO NOT EXIST AS SHOWN.
5. ROUGH GRADE ELEVATIONS SHALL BE AS FOLLOWS:

   8" BELOW FINISHED CONTOURS IN STANDARD DUTY PAVED AREAS. 12.0" HMAC, 8.0" CRUSHED STONE BASE, AND 6.0" RECOMPACTED SUBGRADE

   17" BELOW FINISHED CONTOURS IN HEAVY DUTY PAVED AREAS. 13.0" HMAC, 2.0" CRUSHED STONE BASE, AND 8.0" RECOMPACTED SUBGRADE
6. NEW FINISHED CONTOURS SHOWN ARE TOP OF FUTURE PAVING.
7. STORM DRAIN PIPE IS CLASS III REINFORCED CONCRETE CONFORMING TO ASTM C-76 UNLESS NOTED OTHERWISE.
8. EXISTING ASPHALT & BASE MATERIAL TO BE REMOVED TO A DEPTH OF 2" BELOW EXISTING GRADE IN NEW LANDSCAPED ISLANDS AND LANDSCAPING ADJACENT TO BUILDINGS.
9. FOR EXISTING LANDSCAPED ISLANDS TO BE DEMOLISHED FOR NEW PAVEMENT, REFERENCE DETAIL 5 THIS SHEET.
10. REFER TO SHEET C101 FOR ADDITIONAL DETAILS AND SECTIONS.

SITE PAVING NOTES :

1. CRUSHED STONE BASE AND ASPHALT PAVEMENT MATERIAL AND CONSTRUCTION METHODS SHALL BE IN ACCORDANCE WITH THE STATE OF KANSAS DEPARTMENT OF TRANSPORTATION STANDARDS AND SPECIFICATIONS FOR ROADS.
2. ASPHALT SEAL COAT SHALL ONLY BE APPLIED AFTER THE EXISTING ASPHALT SURFACE HAS BEEN PROPERLY CLEANED AND PREPARED PER MANUFACTURER'S RECOMMENDATIONS. TWO (2) SEAL COAT APPLICATIONS ARE REQUIRED. ONLY APPLICATION TECHNIQUES APPROVED BY THE MANUFACTURER SHALL BE USED.

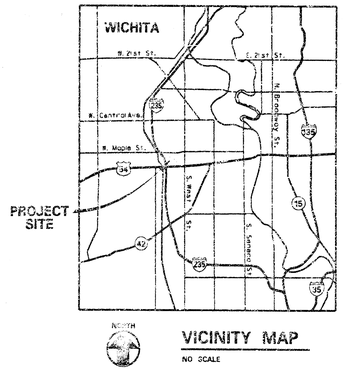

VICINITY MAP

NO SCALE

APPROVED AS NOTED
BY CITY ENGINEER OF WICHITA

Storm Water Sewer _____

NOTE TO CONTRACTORS

Inspection and supervision of testing for this project is to be provided by a Licensed Consulting Engineering Firm under contract with the Owner/Developer. Said inspection to be in accordance with the City of Wichita standard construction engineering practice and certified by a Licensed Professional Engineer. No work shall be performed in dedicated easements or public right-of-way by the Contractor without such inspection nor shall any work be commenced without written authorization by the City Engineer. All Construction and Materials shall comply with the City of Wichita Specifications and Standards (on file and available in the City Engineer's Office).

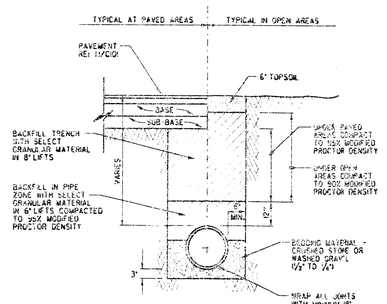

SECTION "A-A" PLAN

3 TYPICAL DRAINAGE STRUCTURE

SCALE: N.T.S.

4 TYPICAL STORM SEWER TRENCH

SCALE: N.T.S.

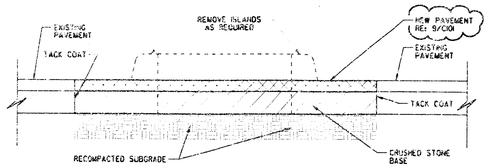

5 CURB ISLAND REMOVAL FOR NEW PAVEMENT

SCALE: 3/4" = 1'-0"

Clyde M. Wells, Architect
Washington Place Suite 400
300 Washington Street
Wichita, Kansas 67202

Dillard's
TOWNE WEST SQUARE - WARD'S - SOUTH
WICHITA, KANSAS

LARRY P. BRIGHT
LICENSED
11878
KANSAS
PROFESSIONAL ENGINEER

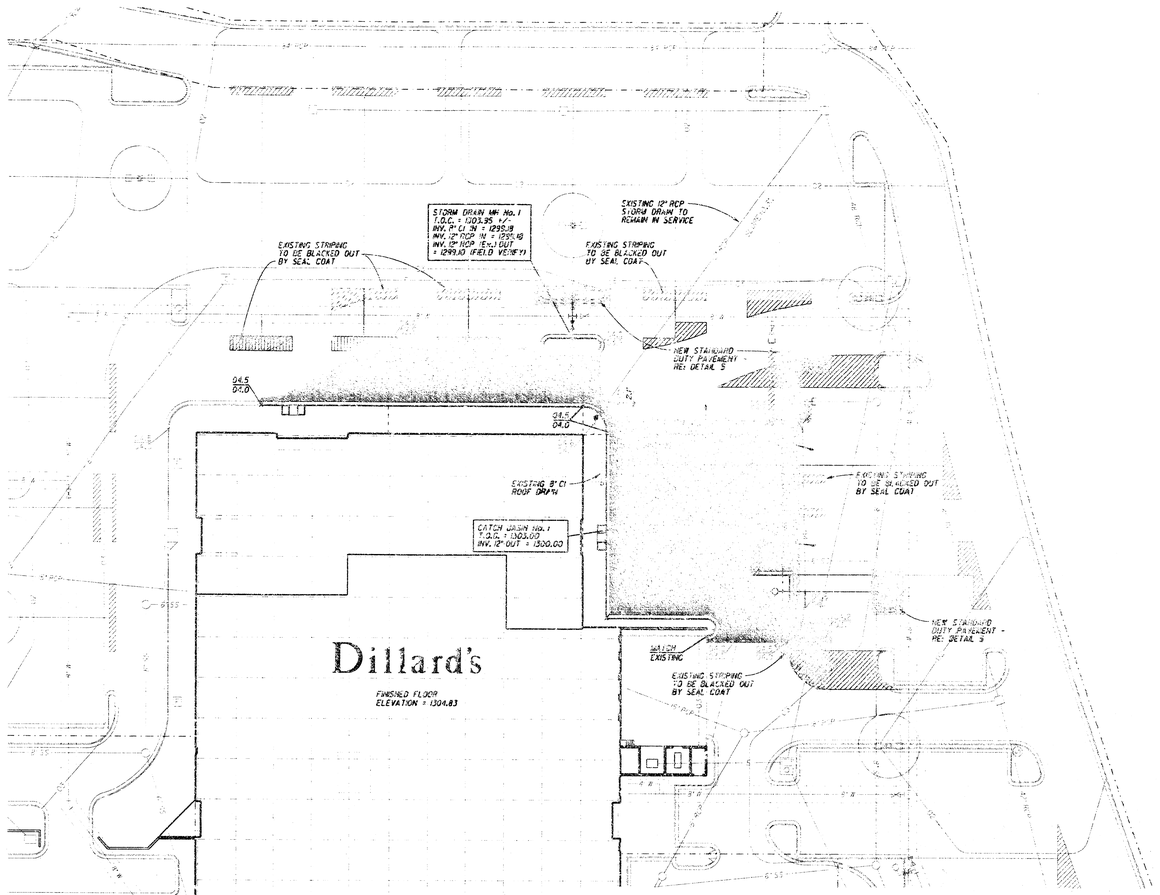

City of Wichita Private Project No. 1145PPS (607861)
STORM WATER SEWER PLAN
SCALE: 1" = 40'

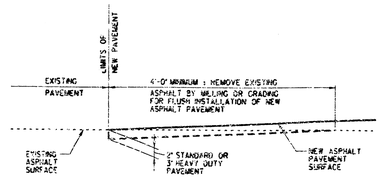

1 NON-TAPERED EDGE FOR NEW ASPHALT PAVEMENT
SCALE: N.T.S.

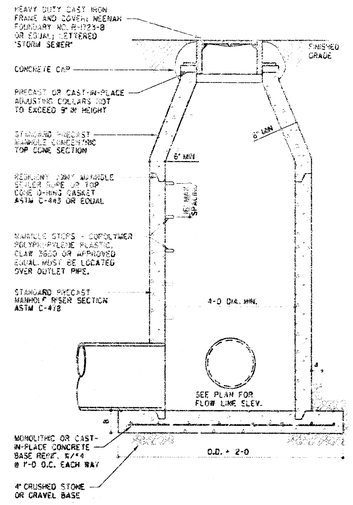

2 STANDARD STORM SEWER PRECAST MANHOLE
SCALE: 1/2" = 1'-0"

CONSTRUCTION NOTES

EROSION AND SEDIMENT CONTROL NOTES :

1. GRADING CONTRACTOR SHALL COMPLY WITH ALL STATE AND LOCAL SEDIMENT CONTROL AND AIR POLUTION ORDINANCES OR RULES.
2. THE GRADING CONTRACTOR SHALL USE WHATEVER MEASURES ARE REQUIRED TO PREVENT SILT AND CONSTRUCTION DEBRIS FROM FLOWING ONTO ADJACENT PROPERTIES. CONTRACTOR SHALL COMPLY WITH ALL LOCAL EROSION, CONSERVATION, AND SILTATION ORDINANCES. CONTRACTOR SHALL REMOVE ALL TEMPORARY EROSION CONTROL STRUCTURES UPON COMPLETION OF PERMANENT DRAINAGE FACILITIES AND CESSATION OF SOIL DISTURBING ACTIVITIES.
3. HAY BALES SHALL BE STAKED AROUND THE NEW CATCH BASIN TO PROHIBIT SILT FROM ENTERING THE STORM SEWER SYSTEM. TEMPORARY SILT FENCING MAY BE REQUIRED TO CONTAIN SILT WITHIN THE CONSTRUCTION AREA. EROSION CONTROL DEVICES ARE TO BE INSTALLED PRIOR TO START OF GRADING OPERATIONS. CONTRACTOR SHALL MAINTAIN ALL TEMPORARY EROSION CONTROL DEVICES AND SHALL REMOVE SILT AS NEEDED.
4. GRADING CONTRACTOR SHALL TAKE ALL AVAILABLE PRECAUTIONS TO CONTROL DUST. CONTRACTOR SHALL CONTROL DUST BY SPRINKLERING OR BY OTHER METHODS.

SITE GRADING & STORM DRAINAGE NOTES:

1. STORM DRAINAGE CONSTRUCTION SHALL BE IN ACCORDANCE WITH THE STANDARDS AND SPECIFICATIONS OF THE CITY OF WICHITA DEPARTMENT OF PUBLIC WORKS.
2. ALL SITE STORM DRAINAGE MATERIALS SHALL BE INSPECTED AND APPROVED BY THE CITY OF WICHITA.
3. SITE GRADES AND STORM DRAINAGE FACILITIES INDICATED ON THE PLANS WERE ESTABLISHED FROM ORIGINAL SMALL SITEWORK CONSTRUCTION DRAWINGS AND HAVE NOT BEEN VERIFIED BY TOPOGRAPHIC SURVEY. CONTRACTOR SHALL FIELD VERIFY EXISTENCE, LOCATION, AND ELEVATIONS OF DRAINAGE FACILITIES AND EXISTING GRADES PRIOR TO CONSTRUCTION.
4. IT IS THE PROJECT INTENT FOR THE CONTRACTOR TO VERIFY AND MATCH EXITING CONDITIONS UNLESS NOTED OTHERWISE. CONTRACTOR SHALL NOTIFY ENGINEER OF ANY ITEMS THAT DO NOT EXIST AS SHOWN.
5. ROUGH GRADE ELEVATIONS SHALL BE AS FOLLOWS:

   8" BELOW FINISHED CONTOURS IN STANDARD DUTY PAVED AREAS. (SUBMAR, 6.0" CRUSHED STONE BASE, AND 6.0" RECOMPACTED SUBGRADE)

   12" BELOW FINISHED CONTOURS IN HEAVY DUTY PAVED AREAS. (SUBMAR, 8.0" CRUSHED STONE BASE, AND 8.0" RECOMPACTED SUBGRADE)
6. NEW FINISHED CONTOURS SHOWN ARE TOP OF FUTURE PAVING.
7. STORM DRAIN PIPE IS CLASS III REINFORCED CONCRETE CONFORMING TO ASTM C-76 UNLESS NOTED OTHERWISE.
8. EXISTING ASPHALT & BASE MATERIAL TO BE REMOVED TO A DEPTH OF 2" BELOW EXISTING GRADE IN NEW LANDSCAPED ISLANDS AND LANDSCAPING ADJACENT TO BUILDINGS.
9. FOR EXISTING LANDSCAPED ISLANDS TO BE DEMOLISHED FOR NEW PAVEMENT, REFERENCE DETAIL 5 THIS SHEET.
10. REFER TO SHEET C101 FOR ADDITIONAL DETAILS AND SECTIONS.

SITE PAVING NOTES :

1. CRUSHED STONE BASE AND ASPHALT PAVEMENT MATERIAL AND CONSTRUCTION METHODS SHALL BE IN ACCORDANCE WITH THE STATE OF KANSAS DEPARTMENT OF TRANSPORTATION STANDARDS AND SPECIFICATIONS FOR ROADS.
2. ASPHALT SEAL COAT SHALL ONLY BE APPLIED AFTER THE EXISTING ASPHALT SURFACE HAS BEEN PROPERLY CLEANED AND PREPARED PER MANUFACTURER'S RECOMMENDATIONS. TWO (2) SEAL COAT APPLICATIONS ARE REQUIRED. ONLY APPLICATION TECHNIQUES APPROVED BY THE MANUFACTURER SHALL BE USED.

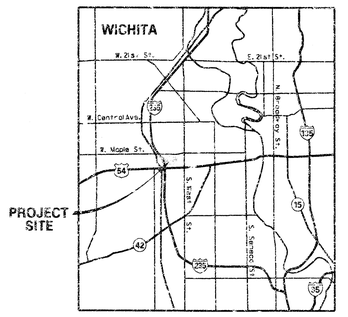

VICINITY MAP
NO SCALE

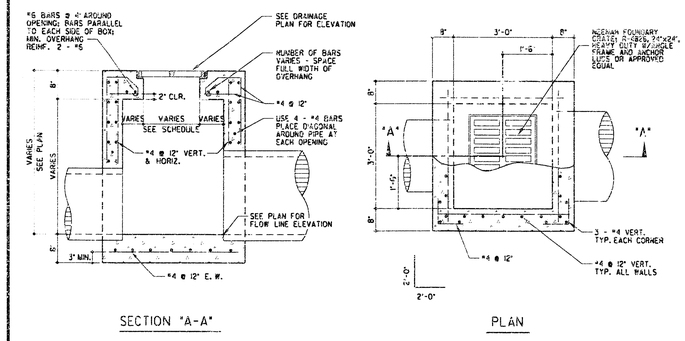

SECTION "A-A" PLAN

3 TYPICAL DRAINAGE STRUCTURE
SCALE: N.T.S.

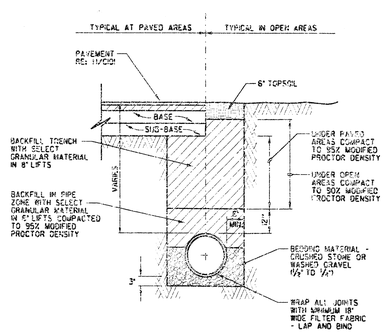

4 TYPICAL STORM SEWER TRENCH
SCALE: N.T.S.

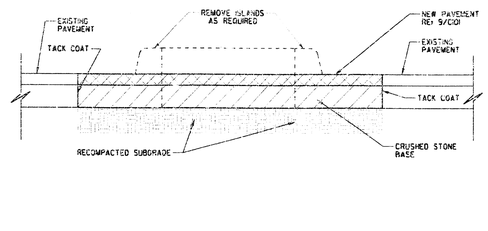

5 CURB ISLAND REMOVAL FOR NEW PAVEMENT
SCALE: 3/4" = 1'-0"

APPROVED AS NOTED
BY CITY ENGINEER OF WICHITA

Storm Water Sewer VRH 8/23/01

NOTE TO CONTRACTORS

Inspection and supervision of testing for this project is to be provided by a Licensed Consulting Engineering Firm under contract with the Owner/Developer. Said inspection to be in accordance with the City of Wichita standard construction engineering practice and certified by a Licensed Professional Engineer. No work shall be performed in dedicated easements or public right-of-way by the Contractor without such inspection nor shall any work be commenced without written authorization by the City Engineer. All Construction and Materials shall comply with the City of Wichita Specifications and Standards on file and available in the City Engineer's Office.

AT 05 01

Clyde M. Wall, Architect
Washington Place, Suite 405
350 Washington Street
Wichita, Louisiana 67202

SITEWORK FOR : Dillard's (SOUTH)
TOWNE WEST SQUARE
WICHITA, KANSAS

LARRY R. WALL LICENSED 11378 KANSAS PROFESSIONAL ENGINEER
08-20-01

Job No.	01067
Date	MAY, 2001

Revisions

No.	Date
1	ISSUE FOR CITY REVIEW 08-20-01

City of Wichita Private Project No. 1145PPS (607861)

STORM WATER SEWER