NEWMARKET SQUARE

AN ADDITION TO WICHITA, SEDGWICK COUNTY, KANSAS

TO WICHITA, SEDGWICK COUNTY, KANSAS

PRIVATE PROJECT NO. 1150PPS(607861)

SCALE: 1"=100'

● = IRON FOUND

DATUM B.M.: CITY OF WICHITA STD. BENCH MARK DISC 64' EAST AND 99' SOUTH OF THE INTERSECTION OF THE CENTERLINES MAIZE ROAD AND 21ST STREET NORTH.

ELEV.=164.3 CITY DATUM

PROJECT BM "W": CHISELED "6" E. SIDE CONCRETE POND OVERFLOW PUMP SITE.

ELEV.=164.33 CITY DATUM

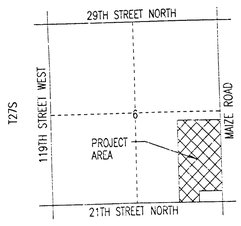

VICINITY MAP

ESTABLISHED MINIMUM PAD (LOWEST OPENING) ELEVATIONS ARE AS FOLLOWS:
LOT 1, BLOCK 1 = 165.6 CITY DATUM, 1355.0 M.S.L.

DARWIN R. CROSS LICENSED 14895 9/25/01 KANSAS PROFESSIONAL ENGINEER

APPROVED AS NOTED
BY CITY ENGINEER OF WICHITA

SANITARY SEWERS _____

STORM SEWERS VRH 8/23/01

DRIVEWAY APPROACHES _____

WATER MAINS _____

PAVING _____

SHEET NO.	TOTAL SHEETS
SUT	1

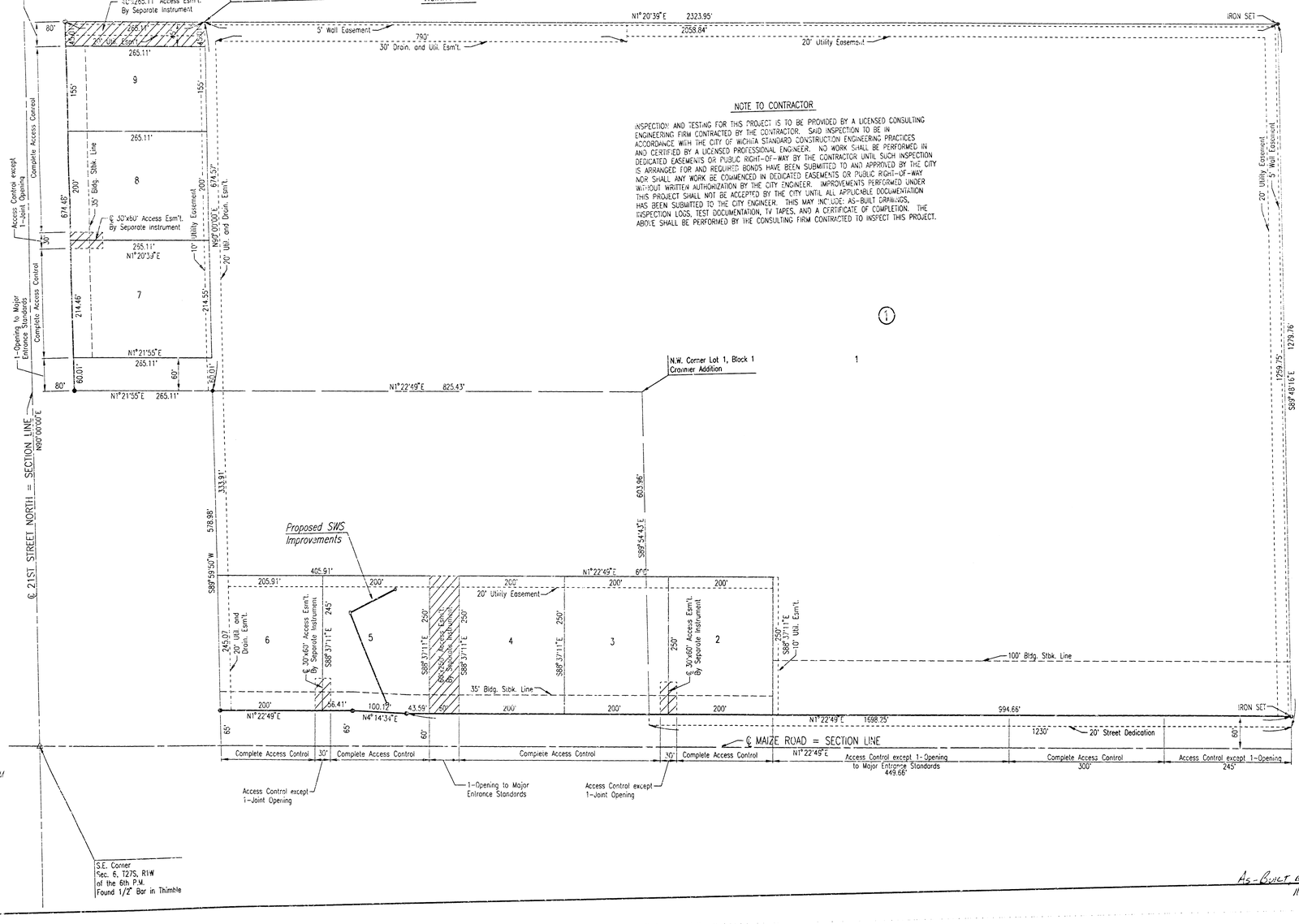

D:\NR_SAD OPER_SAD SCALE 1=100.00
01-2001\01425\VRHTITLE 08-23-2001 01:07:47 pm

NOTE TO CONTRACTOR

INSPECTION AND TESTING FOR THIS PROJECT IS TO BE PROVIDED BY A LICENSED CONSULTING ENGINEERING FIRM CONTRACTED BY THE CONTRACTOR. SAID INSPECTION TO BE IN ACCORDANCE WITH THE CITY OF WICHITA STANDARD CONSTRUCTION ENGINEERING PRACTICES AND CERTIFIED BY A LICENSED PROFESSIONAL ENGINEER. NO WORK SHALL BE PERFORMED IN DEDICATED EASEMENTS OR PUBLIC RIGHT-OF-WAY BY THE CONTRACTOR UNTIL SUCH INSPECTION IS ARRANGED FOR AND REQUIRED BONDS HAVE BEEN SUBMITTED TO AND APPROVED BY THE CITY NOR SHALL ANY WORK BE COMMENCED IN DEDICATED EASEMENTS OR PUBLIC RIGHT-OF-WAY WITHOUT WRITTEN AUTHORIZATION BY THE CITY ENGINEER. IMPROVEMENTS PERFORMED UNDER THIS PROJECT SHALL NOT BE ACCEPTED BY THE CITY UNTIL ALL APPLICABLE DOCUMENTATION HAS BEEN SUBMITTED TO THE CITY ENGINEER. THIS MAY INCLUDE: AS-BUILT DRAWINGS, INSPECTION LOGS, TEST DOCUMENTATION, TV TAPES, AND A CERTIFICATE OF COMPLETION. THE ABOVE SHALL BE PERFORMED BY THE CONSULTING FIRM CONTRACTED TO INSPECT THIS PROJECT.

GENERAL NOTES

1. ALL CONSTRUCTION AND MATERIALS TO COMPLY WITH CITY OF WICHITA SPECIFICATIONS AND STANDARDS.
2. ALL ELEVATIONS SHOWN ARE BASED ON CITY OF WICHITA DATUM.
3. THE CONTRACTOR SHALL LIMIT THE EXTENT OF TRENCH TO REMAIN OPEN OVERNIGHT AND WEEKENDS TO LESS THAN 500 FEET.
4. AT LEAST 72 HOURS PRIOR TO BEGINNING EXCAVATION (EXCLUDING WEEKENDS AND HOLIDAYS), THE CONTRACTOR SHALL CONTACT THE KANSAS ONE-CALL SYSTEM, A UTILITY LOCATION SERVICE, AT (316) 687-2470 TO REQUEST THE LOCAL UTILITY COMPANIES MARK ANY EXISTING LINES WITHIN THE PROJECT AREA.
5. UNDERGROUND UTILITY SERVICE LINES AND OVERHEAD UTILITY POLE LINES ARE TO BE ADJUSTED AS NECESSARY BY OTHERS PRIOR TO CONSTRUCTION UNLESS THE PLANS SPECIFICALLY CALL FOR THEIR ADJUSTMENT BY THE CONTRACTOR OR UNLESS THE PLANS SPECIFICALLY IDENTIFY A UTILITY TO BE ADJUSTED BY ITS OWNER DURING CONSTRUCTION. EXISTING UTILITIES AND THEIR LOCATIONS, AS SHOWN ON THE PLANS, REPRESENT THE BEST INFORMATION OBTAINABLE FOR THE DESIGN. THE CONTRACTOR WILL BE REQUIRED TO WORK AROUND EXISTING UTILITIES WITHIN THE RIGHT-OF-WAY WHICH DO NOT CONFLICT WITH PROPOSED CONSTRUCTION.
6. THE CONTRACTOR SHALL BE RESPONSIBLE FOR PRESERVING PROPERTY IRONS. THE CONTRACTOR WILL BE REQUIRED TO RE-ESTABLISH ANY PROPERTY IRONS WHICH ARE DAMAGED OR DESTROYED BY HIS CONSTRUCTION OPERATIONS. SUCH IRONS SHALL BE RE-ESTABLISHED BY A LICENSED LAND SURVEYOR IN ACCORDANCE WITH STATE LAW.
7. CONTRACTOR SHALL PROVIDE POSITIVE DRAINAGE AWAY FROM ALL MANHOLE COVERS.
8. ALL LAWN/TURF AREAS ON ADJACENT PROPERTIES DISTURBED BY CONSTRUCTION OF THE PROPOSED IMPROVEMENTS SHALL BE RESTORED WITH THE SAME GRASS/SOD AS EXISTING. RESTORATION OF DISTURBED AREAS SHALL INCLUDE, BUT NOT BE LIMITED TO, TOP SOIL PREPARATION, SEEDING, MULCH, AND/OR RESEEDING. ALL SEEDING/SODDING WORK SHALL BE IN ACCORDANCE WITH THE SPECIFICATIONS.
9. RUBBLE FROM THE REMOVAL OF MISCELLANEOUS STRUCTURES INCLUDING ANY TREES REMOVED AND TREE TRIMMINGS SHALL BE DISPOSED OF ON SITES PROVIDED BY THE CONTRACTOR. THESE SITES SHALL ALSO BE APPROVED BY THE ENGINEER AS TO SUITABILITY, APPEARANCE, AND SITE LOCATION. LOCATIONS THAT, IN THE OPINION OF THE ENGINEER, WILL LEAVE AN UNSIGHTLY APPEARANCE WILL NOT BE APPROVED. ALL DISPOSAL SITES MUST BE APPROVED BY THE KANSAS DEPARTMENT OF HEALTH AND ENVIRONMENT. MATERIAL EITHER STOCKPILED OR DISPOSED OF IN A FLOOD PLAIN WILL REQUIRE A KANSAS STATE BOARD OF AGRICULTURE PERMIT. ANY MATERIAL DUMPED IN WATERS OF THE UNITED STATES OR WETLANDS IS SUBJECT TO U.S. CORPS. OF ENGINEERS PERMITTING REGULATIONS. ANY MATERIAL BURIED OR STOCKPILED BEYOND APPROVED CONSTRUCTION LIMITS MAY REQUIRE ARCHAEOLOGICAL INVESTIGATIONS UNLESS BURIED IN A PREVIOUSLY APPROVED DISPOSAL LOCATION.
10. THE CONTRACTOR SHALL AVOID REMOVAL OR TRIMMING OF ANY TREES OR SHRUBS WHERE POSSIBLE. WHERE THE CONTRACTOR BELIEVES THE REMOVAL OR TRIMMING IS UNAVOIDABLE, HE SHALL COORDINATE SUCH WORK WITH THE ENGINEER.
11. THE CONTRACTOR SHALL PREVENT ANY CONSTRUCTION DEBRIS FROM ENTERING THE EXISTING STORM SEWER DURING CONSTRUCTION.
12. THE CONTRACTOR SHALL SEED ALL AREAS DISTURBED BY CONSTRUCTION ACTIVITIES WITH TEMPORARY RYE GRASS. RYE GRASS SEED SHALL BE PLANTED AT A MINIMUM RATE OF SIX (6) POUNDS PER ONE THOUSAND (1,000) SQUARE FEET. THIS TEMPORARY SEEDING MAY BE OMITTED ONLY IF PERMANENT SEEDING IS TO BE COMPLETED WITHIN 14 DAYS AFTER THE AREA HAS BEEN DISTURBED.
13. THE CONTRACTOR IS REQUIRED TO PREVENT SEDIMENT LADEN RUNOFF FROM ENTERING ADJACENT ROADWAYS AND STORM SEWER SYSTEMS. THIS MAY INCLUDE ERECTING SILT FENCE ALONG ADJACENT ROADWAYS, INSTALLING INLET PROTECTION FOR INLETS ON WOODLAWN AND DITCH CHECKS ALONG 37TH STREET NORTH OR TEMPORARY SEEDING OF DISTURBED AREAS THAT WILL NOT HAVE ACTIVITY FOR MORE THAN 14 DAYS. SEE LANDSCAPE PLAN AND SPECIFICATIONS FOR SEEDING, MULCHING AND TOP SOIL PREPARATION. SEE SH. NOS. C18 FOR EROSION CONTROL PLAN AND DETAILS.
14. THE WATER DEPARTMENT SHALL FIELD LOCATE WATER VALVES ONE TIME DURING CONSTRUCTION WHEN REQUESTED BY THE CONTRACTOR. IT SHALL BE THE CONTRACTOR'S RESPONSIBILITY TO PRESERVE SUCH FIELD LOCATIONS DURING THE CONTRUCTION PROCESS. WATER VALVES, WATER VALVE BOXES OR FIRE HYDRANTS DAMAGED DURING CONSTRUCTION SHALL BE REPAIRED BY THE CONTRACTOR AT HIS OWN EXPENSE.

BOOKED C-218 MCG 6-14-02

AS-BUILT BY HARLAN FORAKER, SED 11-2-01

NEWMARKET SQUARE

PLAT AND GENERAL NOTES

Professional Engineering Consultants, P.A.
303 S. TOPEKA • WICHITA, KANSAS 67202
316-262-2691 • FAX 316-262-3003

Designed by	GLM	Checked by	
Drawn by	GLM	Date AUGUST 2001	Job No. 01425

PROJECT NO.	SHEET NO.	TOTAL SHEETS
472-8XXXX	SU2	6

SCALE: 1"=20'

Benchmark #1:

Chiseled "S" N. end HDWL W. side RCB
W. side Maize Rd. 300'± N. of 21st. N.

Elev.= 163.26 City Datum

LEGAL DESCRIPTION

THE NORTH 152.34 FEET OF LOT 5, BLOCK 1, NEWMARKET SQUARE, AN ADDITION TO WICHITA, SEDGWICK COUNTY, KANSAS.

Install 24 L.F. 4" PVC Sch. 40 PVC Rain Leader @ 1/4"/ft. See Mech. Plans for continuation.

Set 1/2" Rebar with PEC Cap

Sta. 13+00.8, SWS Line No. 1
Construct Std. Area Inlet
Top Elev.= 165.70
℄ In= 161.93 (NE)(4" R.L.)
℄ Out= 161.83 (SE)
Install Inlet Protection
See Sh. Nos. SU4 & SU5

Install 41 L.F. 4" Sch. 40 PVC Sanitary Sewer Service @ 1/4"/ft. Min. ℄ at Main= 156.72 (Match)

Set 1/2" Rebar with PEC Cap

Sta. 12+06.6, SWS Line No. 1
Construct Std. Type II Curb Inlet (ONE GRATE INLET ONLY)
Top Elev.= 166.02 (See Detail Sheet SU3)
℄ In= 161.07(NW)
℄ Out= 160.97(NE)
Install 94.2 L.F. 15" RCP(NW) @ 0.8%
Install Inlet Protection
See Sh. Nos. SU3 & SU5

Found 1/2" Rebar with SRB Cap

Found 1/2" Rebar with SRB Cap

Sta. 10+27.00, SWS Line No. 1
Construct. Std. Type II Curb Inlet (ONE GRATE INLET ONLY) (See Detail Sheet SU3)
Top Elev.= 163.00
℄ In= 159.51(SW)
℄ Out= 159.41(E)
Install 179.6 L.F. 15" RCP(SW) @ 0.8%
Install Inlet Protection
See Sh. Nos. SU3 & SU5

Sta. 10+00, SWS Line No. 1= Existing Curb Inlet.
Begin SWS Construction
Connect to Existing 15" PVC Stub and Install 27.0± L.F. 15" PVC @ 0.8%
℄ In= 159.19 (Match)
Performed 9-19-01

1" PVC WATERLINE (1' WEST OF SIDEWALK, 3' DEEP)

1 1/2" Dom. Water Service and 1" Water Meter. Contractor shall schedule with City of Wichita Water Dept. to Tap the main, install Service Line to the meter, and set the water meter and meter box. The Contractor shall reimburse the City for all costs for this work.

Install 1 1/2" Dom. Service to within 5 feet of Bldg. See Mech. Plans for Continuation.

CAUTION!!! Buried 8" Water (COW) Top of Pipe= 157.66± ℄ 15" PVC= 159.37

Performed 9-19-01
Remove and Replace Concrete Sidewalk, in kind, as necessary for SWS Installation. Remove to nearest joint.

CAUTION!!! Buried 8" Gas (KGS & Peoples) and Buried Telephone (SWB)

Top= 163.29
℄= 159.13
℄= 159.24
18" RCP

Set Chiseled "+"

Set Chiseled "V"

Stem Wall= 168.25 (1' tall)

F.F.= 167.25

60'x250' Access Esm't. By Separate Instrument

℄ 30'x60' Access Esm't. By Separate Instrument

S88°37'11"E 250'

S88°37'11"E 245'

N1°22'49"E 200.00'

N1°27'49"E 43.59'

N1°22'49"E 152.34'

20' Utility Easement

15" RCP

72.4'

87.2'

66.9'

4.1'

24.5'

16.5'

40'

10'

6.1'

MAIZE ROAD

60'

65'

12" Black Corrugated Plastic Pipe

4" Gas Line (PNG) (rec. info)

4" Gas Line (PNG) (rec. info) Concrete Sidewalk

15' Utility Esm't.

10' Waterline Esm't. (by separate instrument)

SPL SWR

Peoples Natural Gas

8" PVC

6" PVC

Top= 166.55
℄= 156.25 (N)
℄= 156.25 (S)
℄= 156.60 (SE)
℄= 156.57 (NE)

LEGEND

BM	BENCH MARK
LP	LIGHT POLE
E	OVERHEAD ELECTRIC
T	TELEPHONE BOX
T	BURIED TELEPHONE
W	WATER VALVE
FH	FIRE HYDRANT
W	WATER LINE
SS	SANITARY SEWER MANHOLE
G	GAS LINE

ϕ 4" RAIN LEADER SHALL BE INSPECTED BY O.C.I.

NOTE: CONTRACTOR SHALL VERIFY ALL INLET LOCATIONS WITH DIMENSIONED SITE PLAN PRIOR TO BEGINNING SWS CONSTRUCTION.

A-Built By Harold Forker, OED
11-2-01

NEW MARKET SQUARE ADDITION

NEW MARKET SQUARE

TENANT BUILDING
SITE UTILITY PLAN

Professional Engineering Consultants, P.A.
301 S. TOPEKA • WICHITA, KANSAS 67202
316-262-2691 • FAX 316-262-3063

Designed by	DAR	Checked by	
Drawn by	SAD	Date AUG. 2001	Job No. 01425

DSNR: SAD OPER: SAD SCALE: 1=20.00
O:\2001\01425\Utility 08-23-2001 01:33:35 pm

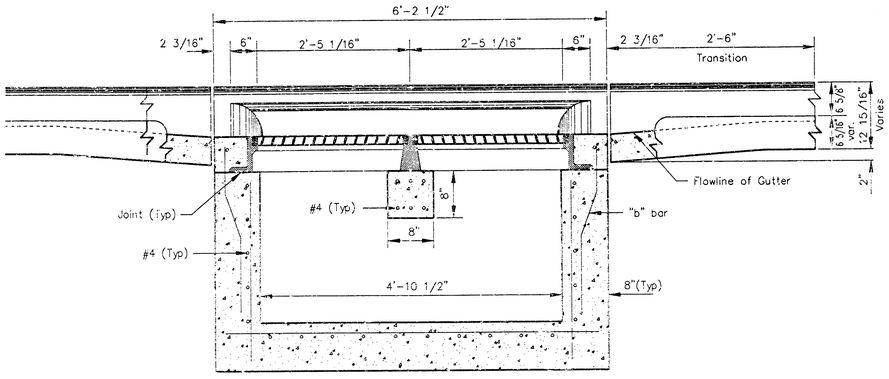

SECTION C-C

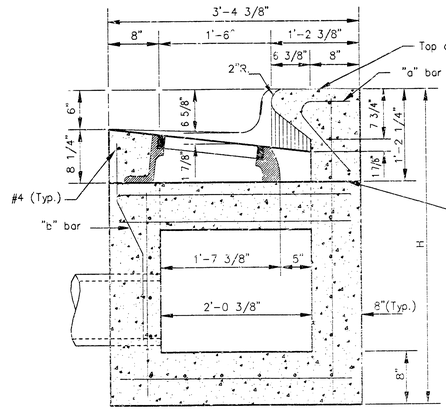

SECTION A-A

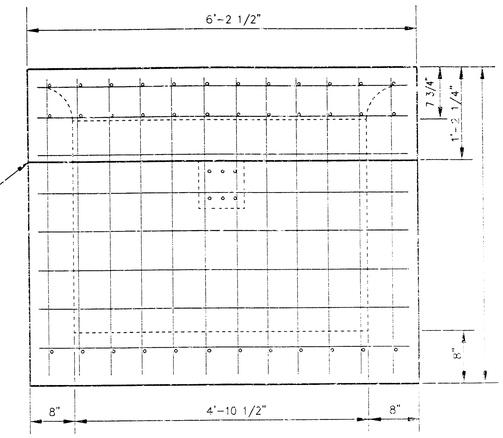

REAR WALL

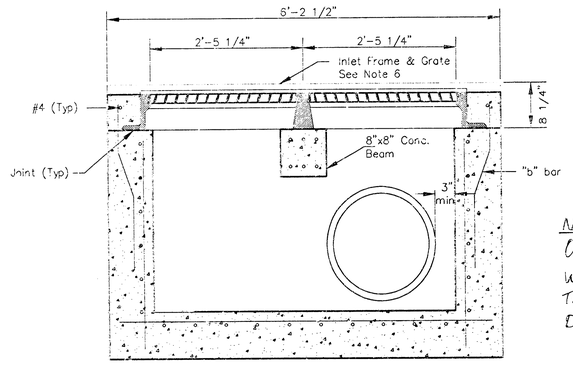

SECTION D-D

NOTE:
ONE GRATE INLET WAS CONSTRUCTED ON THIS PROJECT WITH DESIGN ENGINEER'S APPROVAL

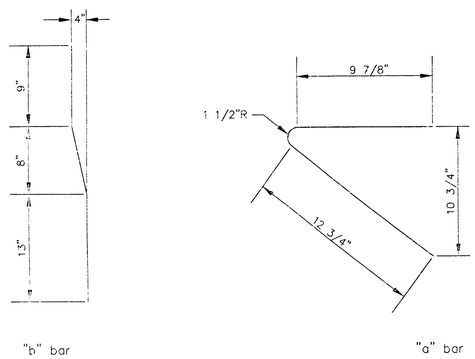

BENDING DIAGRAM

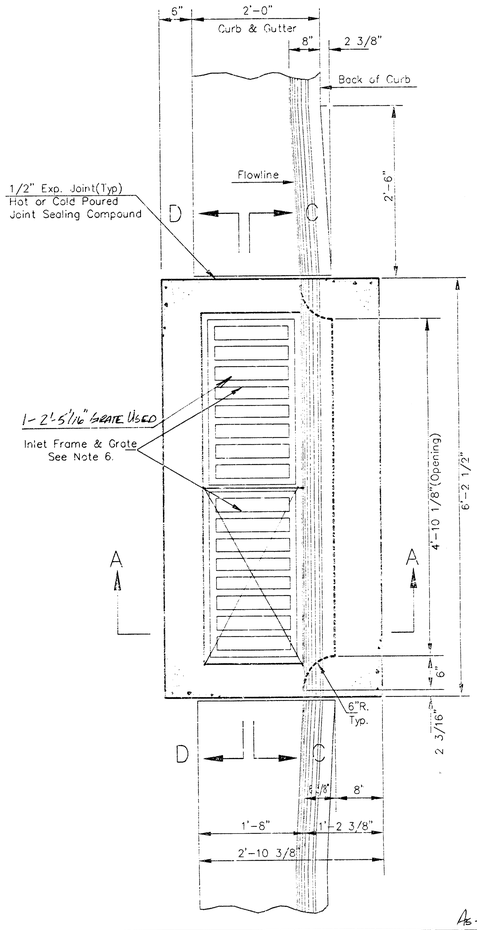

GENERAL NOTES

1. Use the concrete mix specified for the City of Wichita concrete pavement throughout. All exposed edges shall be finished with an edging tool. Reinforcing bars shall be bent around pipe.
2. Inlet invert shall be shaped with 8 sack mix concrete to create flow channels and to increase hydraulic efficiency such that the inlet will be self cleaning between all inlet and/or outlet pipes.
3. All bars are #4 with 6" spacing and shall have a minimum clearance of 1 1/2 inches unless otherwise noted on the plans.
4. When directed by the Engineer, a small opening may be required in the back of the inlet in order to drain a low area. Reinforcing bars will extend through the openings. No deductions in concrete quantities will be made for these openings.
5. No deductions will be made in pay length of curb, gutter, or curb and gutter through the inlet area.
6. Use Neenah R-3288 HV Inlet Frame with ~~Two~~ ONE Piece Grate USED or approved equal. Inlet frame to be proof load tested to 40,000 lbs. on unsupported side.
7. Reinforcing bars shall be cut or bent around pipes. No deduction in concrete quantites shall be made for pipe openings.
8. The vanes of the grate shall be oriented with respect to the flow arrows shown on the plans.
9. DEETER FOUNDARY, Inc. casting No. 2442/43 with style H grate is an approved equal to NEENAH castings specified. Inlet drawing is based on NEENAH castings and concrete walls and supports will require some field modification to accomodate DEETER castings.

AS-BUILT, BY HARLAN FURAKER, CED
11-2-01

THE CITY OF WICHITA

CITY ENGINEER'S OFFICE
CITY HALL - SEVENTH FLOOR
455 NORTH MAIN STREET
WICHITA, KANSAS 67202
(316) 268-4507
(316) 268-4114 FAX

STANDARD TYPE II INLET OPENING
6" x ~~4' 10 1/8"~~ 2'- 5 1/16"

M. E. LINDEBAK P.E. - CITY ENGINEER

PROJECT NUMBER	OCA NO.
472-8XXXX	XXXXXX
DATE: MAR 96	SHEET SU3 OF 5

DSNR: SAD OPER: SAD SCALE: 1=1.00
C:\2001\01425\TYPEII 08-23-2001 01:53:00 pm

PROJECT NO.	SHEET NO.	TOTAL SHEETS
472-8XXXX	SU4	5

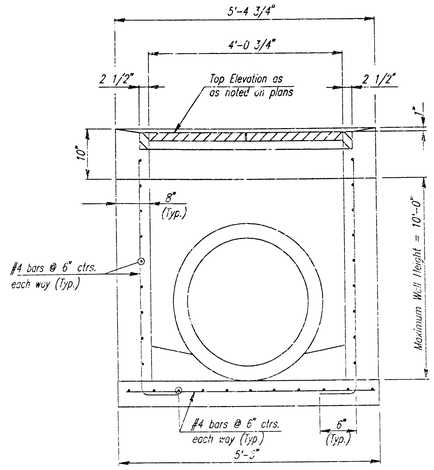

SECTION A-A

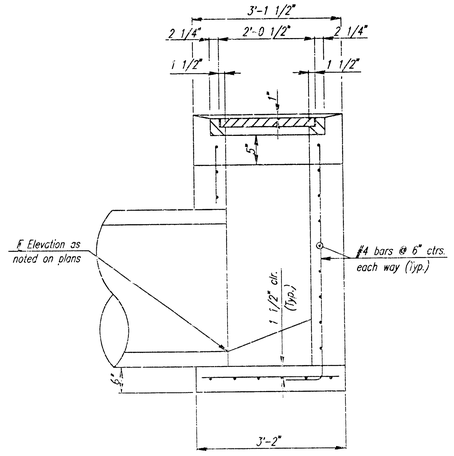

SECTION B-B

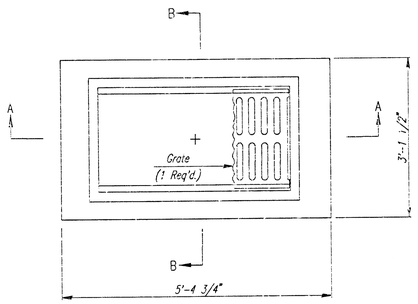

PLAN

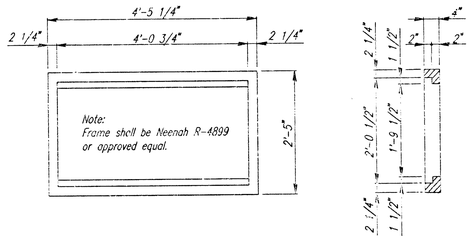

FRAME DETAIL
(Wt.=440 lbs.)

Note:
Frame to mate with 2 Neenah R-4826 Grates or approved equal.

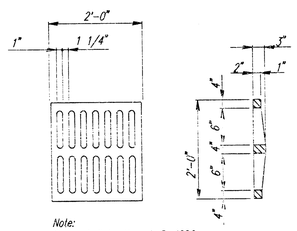

Note:
Grate shall be Neenah R-4826 or approved equal.

GRATE DETAIL
(Wt.=190 lbs.)
(2 Required)

GENERAL NOTES- AREA INLETS

CONCRETE SHALL HAVE A MINIMUM 28 DAY COMPRESSIVE STRENGTH OF 4000 PSI. ALL PIPES SHALL BE FLUSH CUT PRIOR TO BEING CAST INTO WALLS.

REINFORCING STEEL SHALL BE GRADE 60, A.S.T.M. A615. ALL DIMENSIONS RELATIVE TO PLACEMENT OF REINFORCING ARE TO THE CENTERLINE OF BARS UNLESS OTHERWISE NOTED.

INLET CASTINGS SHALL BE MANUFACTURED USING DUCTILE IRON CONFORMING TO ASTM A536-80 GRADE 65-45 12. DIMENSIONS AND WEIGHTS SHOWN ON THE DETAILED DRAWINGS SHALL BE CONSIDERED AS MINIMUM REQUIREMENTS AND ANY DEVIATIONS FROM THE DIMENSIONS SHOWN MUST BE SPECIFICALLY APPROVED. THE FINISHED CASTINGS SHALL BE OF UNIFORM QUALITY, FREE FROM BLOWHOLES, POROSITY, HARD SPOTS, SHRINKAGE DISTORTIONS OR OTHER DEFECTS.

INLET FLOOR SHALL BE SHAPED WITH UNREINFORCED CONCRETE (8 SACK SAND MIX) TO CREATE FLOW CHANNELS AND TO INCREASE HYDRAULIC EFFICIENCY SUCH THAT THE INLET WILL BE SELF CLEANING BETWEEN ALL INLET AND/OR OUTLET PIPES.

PIPES ENTERING EXISTING STRUCTURE SHALL BE CENTERED ON INSIDE FACE OF WALL.

ALL EXPOSED STRUCTURAL STEEL SHALL BE PAINTED WITH A COAT OF INORGANIC ZINC PRIMER AND THEN WITH A TOP COAT OF OR A FIELD COAT OF ORGANIC ZINC, EACH COAT TO BE 3 TO 4 MILS. STRUCTURAL STEEL USED TO FABRICATE THE SPECIAL AREA INLET FRAME SHALL COMPLY WITH A.S.T.M. A36. WELDING SHALL CONFORM TO THE STRUCTURAL WELDING CODE A.W.S. D1.1-88.

AREA INLETS MAY BE PRECAST AT THE CONTRACTOR'S OPTION, WITH APPROVAL OF THE ENGINEER.

STANDARD AREA INLET (2'X'4')

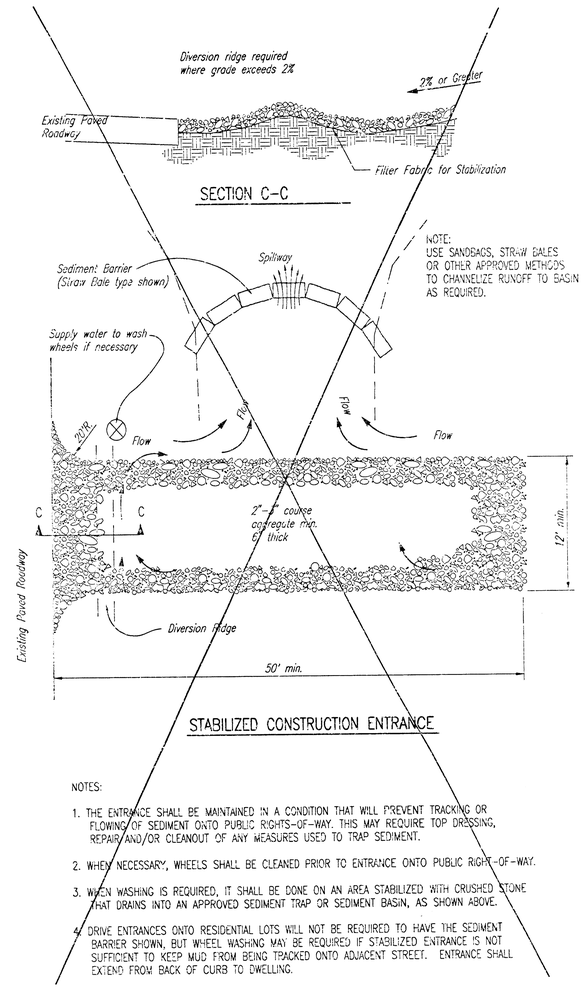

STABILIZED CONSTRUCTION ENTRANCE

NOTES:

1. THE ENTRANCE SHALL BE MAINTAINED IN A CONDITION THAT WILL PREVENT TRACKING OR FLOWING OF SEDIMENT ONTO PUBLIC RIGHTS-OF-WAY. THIS MAY REQUIRE TOP DRESSING, REPAIR AND/OR CLEANOUT OF ANY MEASURES USED TO TRAP SEDIMENT.
2. WHEN NECESSARY, WHEELS SHALL BE CLEANED PRIOR TO ENTRANCE ONTO PUBLIC RIGHT-OF-WAY.
3. WHEN WASHING IS REQUIRED, IT SHALL BE DONE ON AN AREA STABILIZED WITH CRUSHED STONE THAT DRAINS INTO AN APPROVED SEDIMENT TRAP OR SEDIMENT BASIN, AS SHOWN ABOVE.
4. DRIVE ENTRANCES ONTO RESIDENTIAL LOTS WILL NOT BE REQUIRED TO HAVE THE SEDIMENT BARRIER SHOWN, BUT WHEEL WASHING MAY BE REQUIRED IF STABILIZED ENTRANCE IS NOT SUFFICIENT TO KEEP MUD FROM BEING TRACKED ONTO ADJACENT STREET. ENTRANCE SHALL EXTEND FROM BACK OF CURB TO DWELLING.

NEWMARKET SQUARE

MISCELLANEOUS DETAILS

Professional Engineering Consultants, P.A.
303 S. TOPEKA • WICHITA, KANSAS 67202
316-262-2691 • FAX 316-262-3303

Designed by	DRC	Checked by	
Drawn by	SAD	Date AUG. 2001	Job No. 01425

As-Built, By Harlan Forker, PE
11-2-01

DSNR: SAD OPER: SAD SCALE: 1=1.00
Q:\2001\01425\Inlet details 08-23-2001 01:20:49 pm

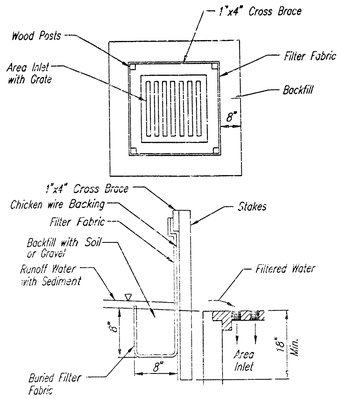

SILT FENCE BARRIERS FOR AREA INLETS
(INLET PROTECTION)

Material Specification:

Silt fence fabric should conform to the AASHTO M288 96 silt fence specification.
The wire or polymeric mesh backing used to help support the silt fence fabric should conform to the AASHTO M288 96 silt fence specification.
The posts used to support the silt fence fabric should be a hardwood material with the following minimum dimensions: 2" square (nominal) by 4' long.
The material used to frame the tops of the posts should be 1" by 4" boards.
Silt fence fabric and support backing should be ctteched to the wooden posts and frame with staples, wire, zip ties, or nails.

Placement:

Place a silt fence drop inlet barrier in a location where it is unlikely to be overtopped.
Water should flow through silt fence, not over it. Silt fence barriers for area inlets often fail when repeatedly overtopped.
When used as a barrier for area inlets, silt fence fabric and posts must be supported at the top by a wooden frame.
When a silt fence barrier for area inlets is located near an inlet that has steep approach slopes, the storage capacity behind the barrier is drastically reduced. Timely removel of sediment must occur for a barrier to operate properly in this location.

Proper installation method:

Excavate a trench around the perimeter of the area inlet that is at least 8" deep by 8" wide.
Drive posts to a depth of at least 18" around the perimeter of the area inlet.
The distance between posts should be 4' or less. If the distance between two adjacent corner posts is more than 4', add another post(s) between them.
Connect the tops of all the posts with a wooden frame made of 1" by 4" boards. Use nails or screws for fastening.
Attach the wire or polymeric-mesh backing to the outside of the post/frame structure with staples, wire, zip ties, or nails.
Roll out a continuous length of silt fence fabric long enough to wrap around the perimeter of the area inlet. Add more length for overlapping the fabric joint. Place the edge of the fabric in the trench, starting at the outside edge of the trench. Line all three sides of the trench with the fabric. Backfill over the fabric in the trench with the excavated soil and compact. After filling the trench, approximately 24" to 36" of silt fence fabric should remain exposed.
Attach the silt fence to the outside of the post/frame structure with staples, wire, zip ties, or nails. The joint should be overlapped to the next post.

Note: When a silt fence barrier for area inlet is placed in a shallow median ditch, make sure that the top of the barrier is not higher than the paved road. In this configuration, water may spread onto the roadway causing a hazardous condition.

List of common placement/installation mistakes to avoid:

Water should flow through a silt fence barrier for area inlet-not over it. Place a silt fence barrier for area inlet in a location where it is unlikely to be overtopped. Silt fence barrier for area inlets often fail when repeatedly overtopped.
Do not place posts on the outside of the silt fence barrier for area inlet. In this configuration, the force of the water is not resisted by the posts, but only by the staples (wire, zip ties, nails, etc.). The silt fence will rip and fail.
Do not install silt fence barrier for area inlets without framing the top of the posts. The corner posts around area inlets are stressed in two directions whereas c normal silt fence is only stressed in one direction. This added stress requires more support.

Inspection and Maintenance:

Silt fence barrier for area inlets should be inspected every 7 days and within 24 hours of a rainfall of 1/2" or more. The following is a list of questions that should be addressed during each inspection:

Does water flow under the silt fence?
Does the silt fence sag excessively?
Has the silt fence torn or become detached from the posts?
Does sediment need to be removed from behind the area inlet barrier?

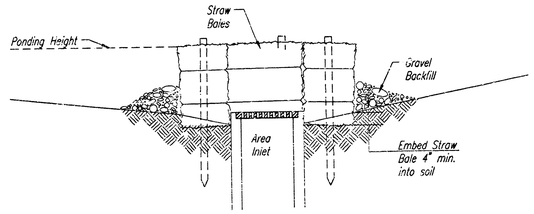

SECTION A-A

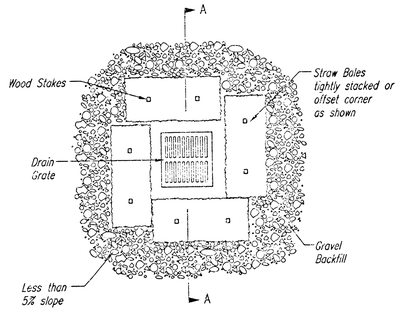

STRAW BALE BARRIERS FOR AREA INLETS
(INLET PROTECTION)

Material Specification:

Bale area inlet barriers should be constructed of wheat straw, oat straw, prairie hay, or bromegrass hay that is free of weeds declared noxious by the Kansas State Board of Agriculture.
The stakes used to anchor the bales should be a hardwood material with the following minimum dimensions: 2" square (nominal) by 4' long.

Placement:

Bale area inlet barriers should be placed directly around the perimeter of a drop inlet.
When a bale area inlet barrier is located near an inlet that has steep approach slopes, the storage capacity behind the barrier is drastically reduced. Timely removel of sediment must occur for a barrier to operate properly in this location.

Proper Installation Method:

Excavate a trench around the perimeter of the area inlet that is at least 4" deep by a bale's width wide.
Place the bales in the trench, making sure that they are butted tightly. Some bales may need to be shortened to fit into the trench around the area inlet. Two stakes should be driven through each bale, approximately 6" to 8" in from the bale ends.
Stakes should be driven at least 12" into the ground.
Once all the bales have been installed and anchored, place the excavated soil against the receiving side of the barrier and compact it. The compacted soil should be no more than 3" to 4" deep.
Note: When a bale area inlet barrier is placed in a shallow median ditch, make sure that the top of the barrier is not higher than the paved road. In this configuration, water may spread onto the roadway causing a hazardous condition.

List of common placement installation mistakes to avoid:

Bales should be placed directly against the perimeter of the area inlet. This allows overtopping water to flow directly into the inlet instead of onto nearby soil causing scour.
Bale area inlet barriers must be dug into the ground. Bales at ground level do not work because they allow water to flow under the barrier.

Inspection and Maintenance:

Bale area inlet barriers should be inspected every 7 days and within 24 hours of a rainfall 1/2" or more. The following is a list of questions that should be addressed during each inspection:

Does water flow under the area inlet barrier?
Does water flow through spaces between abutting bales?
Are any bales dislodged?
Are bales decomposing due to age and/or water damage?
Does sediment need to be removed from behind the area inlet barrier?

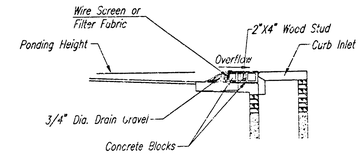

SECTION A-A

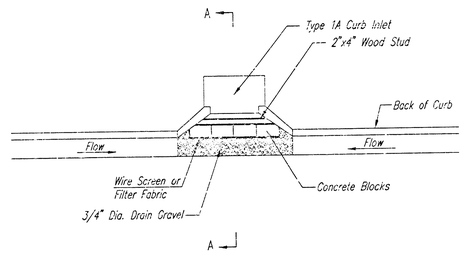

CURB INLET GRAVEL FILTERS
(INLET PROTECTION-RESIDENTIAL STREETS ONLY)

NOTE: Other types of curb inlet protection may be approved so long as equal protection is provided.

A gravel inlet filter shall be installed at sump locations on residential streets.
This type of protection is not to be used on arterial or collector streets at any time that it would pose an undue traffic hazard.

Instructions for Installing:

STEP 1: Place concrete blocks around the inlet as shown on drawing. Insert 2x4 board as shown.
STEP 2: Wrap 1/2" mesh wire screen around the concrete blocks.
STEP 3: Place 1" to 1-1/2" diameter rock around the blocks and wire screen. Be sure the rock extends down from the top of the concrete block.
STEP 4: To prevent damage to vehicles, signs warning drivers about the structures may be necessary. An alternative installation is the use of gravel bags supported by a 2"x4" board to prevent collapsing.

Use of rock with diameters smaller than 1" in the bag may result in clogging of pores and reduce the amount of water flowing into an inlet.

Maintenance:

All curb inlet gravel filters shall be inspected and repaired after each runoff event.
Sediment deposits are to be removed once material is within 8 cm (3 inches) of the top of any block. Periodically, the gravel shall be raked to increase infiltration and filtering of runoff waters. Accumulated sediment is to be removed immediatsly from roads and streets.

CITY OF WICHITA

INLET PROTECTION BMP DETAILS

CHRISTOPHER M. CARRIER, P.E.
STORM WATER ENGINEER

PROJECT NUMBER ____-_____ | OCA NO. _____

DATE MAY 2001 | SHEET SU5 OF 5

As-Built. By Harlan Hearne, CED 11-2-01

18 11 01 18

DSNR: SAD OPER: SAD SCALE: 1=1.00
Q:\2001\01425\SEDMP_PFC_DTL52-R14 08-23-2001 01:21:50 pm