PRIVATE STORMWATER SEWER TO SERVE

MEL HAMBELTON ADDITION

Private Project Number: 1173 PPS (607861)

CITY OF WICHITA, KANSAS

Michael E. Lindebak, P.E. City Engineer

NOVEMBER 2001

Legal Description

Mel Hambelton Addition, Wichita, Sedgwick County, Kansas

General Notes:

1. Contractor will be required to provide notice to utility companies a minimum of twenty-four (24) hours prior to any excavation, as follows:

   Kansas One-Call 687-2470

   The Contractor must notify the following in case of an emergency:

Cox Communications, Inc.	262-0661
K.G.E. Electric Service	383-8650
Kansas Gas Service	383-8600
Peoples Gas Company	942-8350
Southwestern Bell Telephone Company	1-800-870-8390
City of Wichita Water Dept.	268-4908
City of Wichita Traffic Engineering	269-4446
Koch Pipeline Company	1-800-555-9041

2. Underground utility service lines and overhead utility pole lines are to be adjusted as necessary by others prior to construction unless the plans specifically call for their adjustment by the Contractor or unless the plans specifically identify a utility to be adjusted by its owner during construction. Existing utilities and their location, as shown on the plans, represent the best information obtainable for design. The Contractor will be required to work around existing utilities within the right-of-way which do not conflict with proposed construction.

3. Trees and shrubs in public right-of-way which are in direct conflict with proposed new construction shall be removed by the Contractor with the Engineer's approval. Trees and shrubs which are not in direct conflict with proposed new construction shall be saved and protected from damage.

4. The Contractor shall be responsible for preserving property irons. The Contractor will be required to re-establish any property irons which are damaged or destroyed by his construction operations. Such irons shall be reestablished by a licensed land surveyor in accordance with state laws.

5. Contractor shall not start work on the project until the project inspector is assigned to the project and is present on the site. Any work done without inspection will be required to be uncovered for inspection.

6. Rubble from the removal of miscellaneous structures and excess excavation which is to be wasted shall be disposed of on sites to be provided by the Contractor. These sites shall be approved by the Engineer as to suitability, appearance and site location. Locations that, in the opinion of the Engineer, will leave an unsightly appearance will not be approved.

8. Baughman Company will Provide Contractor with Sedgwick County Utility Permit Agreement for the Use of Public right-of-way.

9. The Contractor shall not interrupt traffic when crossing 119th Street West.

10. All disturbed R/W areas not intended for pavement or sidewalk construction shall be seeded with Kansas Premium Fescue Blend at a rate of 8 lb./1000 Sq. Ft., fertilized with a 16-20-6 ratio at a rate of 4 lb./1000 Sq. Ft., and mulched with Prairie Hay at a rate of 92 lb./1000 Sq. Ft. Mulch shall be "potted" with forks or punched into soil to reduce loss due to wind.

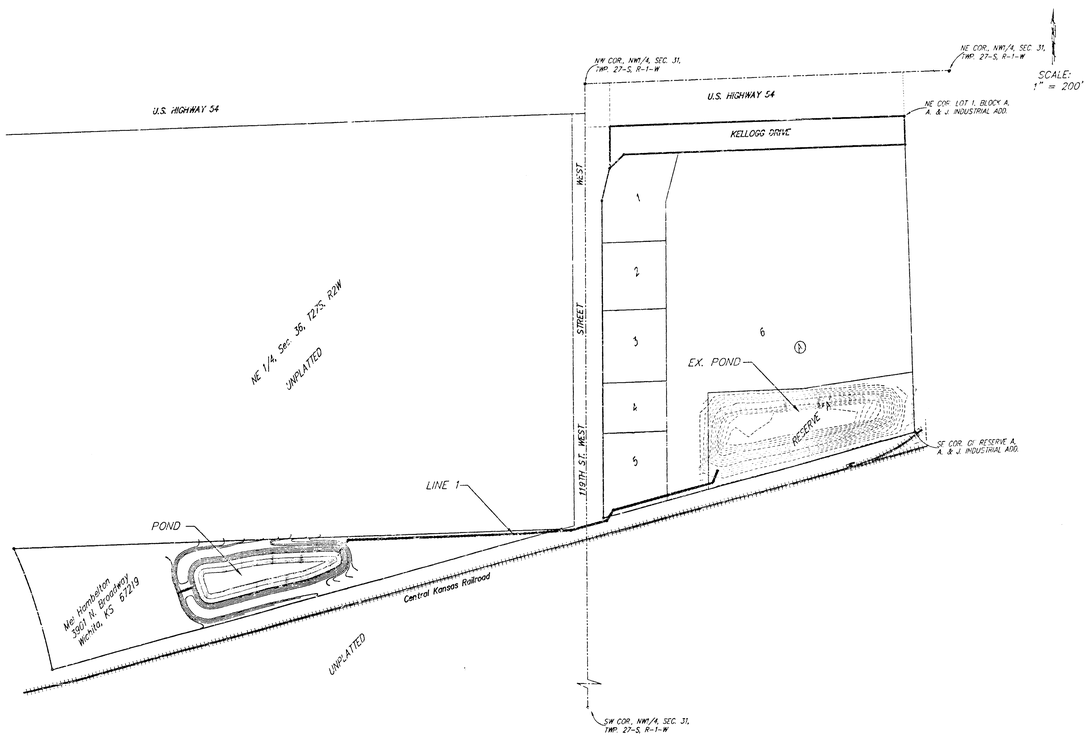

Index

Cover Sheet	1
Line 1	2-4
Pond Plan	5
Cross Sections	6
Manhole Detail	7
Copy of Plat & Survey	8-9

Bench Marks

City of Wichita Disc. 12.80' South of Concrete Slab, 13.00' North of Cable Guard Rail, and 85.50' East of Center Line of 119th Street West.
Elev. = 145.96 City Datum

APPROVED AS NOTED
BY CITY ENGINEER OF WICHITA

Storm Sewers VRH 11/32/01

NOTE TO CONTRACTORS

Installation, inspection and testing for this project is to be provided by a Licensed Consulting Engineering Firm under contract with the Owner/Developer. Said inspection to be in accordance with the City of Wichita standard construction engineering practices and certified by a Licensed Professional Engineer. No work shall be performed in dedicated easements or public right-of-way by the Contractor without such inspection nor shall any work be commenced without written authorization by the City Engineer. All Construction and Materials shall comply with the City of Wichita Specifications and Standards (on file and available in the City Engineer's Office).

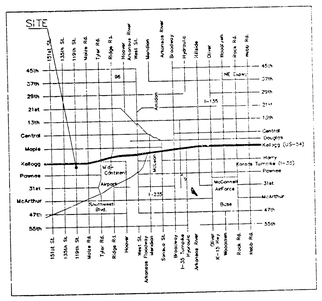

LOCATION MAP

AsBuilt 11/02 KK

BAUGHMAN COMPANY P.A.

ENGINEERING, SURVEYING & PLANNING

316-262-2691 • WICHITA • [illegible]

11/19/01

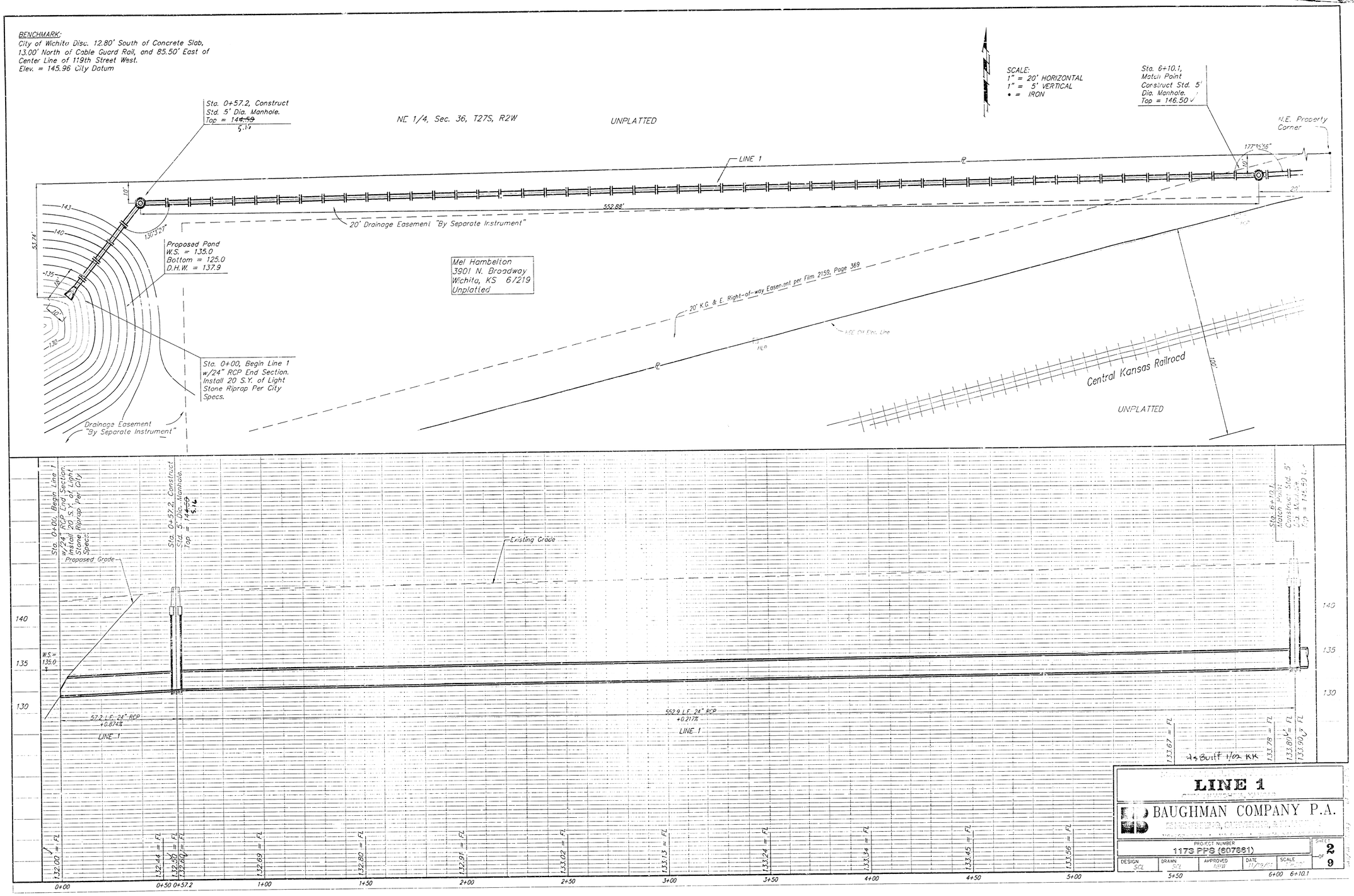
BENCHMARK:
City of Wichita Disc. 12.80' South of Concrete Slab, 13.00' North of Cable Guard Rail, and 85.50' East of Center Line of 119th Street West.
Elev. = 145.96 City Datum
SCALE:
1" = 20' HORIZONTAL
1" = 5' VERTICAL
• = IRON
Sta. 0+57.2, Construct Std. 5' Dia. Manhole. Top = 144.50
NE 1/4, Sec. 36, T27S, R2W
UNPLATTED
Sta. 6+10.1, Match Point Construct Std. 5' Dia. Manhole. Top = 146.50
N.E. Property Corner
LINE 1
552.88'
20' Drainage Easement "By Separate Instrument"
Proposed Pond W.S. = 135.0 Bottom = 125.0 D.H.W. = 137.9
Mel Hambelton 3901 N. Broadway Wichita, KS 67219 Unplatted
20' K.G. & E. Right-of-way Easement per Film 2159, Page 369
Sta. 0+00, Begin Line 1 w/24" RCP End Section. Install 20 S.Y. of Light Stone Riprap Per City Specs.
Drainage Easement "By Separate Instrument"
Central Kansas Railroad
UNPLATTED
Sta. 0+00, Begin Line 1 w/24" RCP End Section. Install 20 S.Y. of Light Stone Riprap Per City Specs.
Sta. 0+57.2, Construct Std. 5' Dia. Manhole. Top = 144.50
Proposed Grade
Existing Grade
Sta. 6+10.1, Match Point Construct Std. 5' Dia. Manhole. Top = 146.50
W.S. = 135.0
57.2 L.F. 24" RCP +0.874%
LINE 1
552.9 L.F. 24" RCP +0.217%
LINE 1
132.00 = FL
132.44 = FL
132.50 = FL
132.60 = FL
132.69 = FL
132.80 = FL
132.91 = FL
133.02 = FL
133.13 = FL
133.24 = FL
133.34 = FL
133.45 = FL
133.56 = FL
133.67 = FL
133.78 = FL
133.80 = FL
133.90 = FL
0+00
0+50
0+57.2
1+00
1+50
2+00
2+50
3+00
3+50
4+00
4+50
5+00
5+50
6+00
6+10.1
As Built 1/02 KK
LINE 1
BAUGHMAN COMPANY P.A.
PROJECT NUMBER
1173 PPS (607861)
SHEET 2 OF 9
DESIGN SCL
DRAWN SCL
APPROVED NEW
DATE
SCALE

BENCHMARK:
City of Wichita Disc. 12.80' South of Concrete Slab, 13.00' North of Cable Guard Rail, and 85.50' East of Center Line of 119th Street West.
Elev. = 145.96 City Datum

SCALE:
1" = 20' HORIZONTAL
1" = 5' VERTICAL
⊕ = IRON

Contractor Shall Bore 24" RCP 35 L.F. Below 119th Street West per City Specs.

PVC 4.0 L.F. 30" Steel Casing

CAUTION! SWBT F/O, 16" Water, & SWBT Line Crossings. Verify Depths!

Sta. 7+48.5, Construct Std. 5' Dia. Manhole. Top = 145.40 ✓

NE 1/4, Sec. 36, T27S, R2W
UNPLATTED

20' DRAINAGE EASEMENT "By Separate Instrument"

Sta. 6+10.1, Match Point

LINE 1

177°35'56"

N.E. Property Corner

169°45'39"

138.14'

HLP

40' R/W

50' R/W

Existing Asphalt Pavement

119TH ST. WEST

Ex. 16" City of Wichita Water Line

Ex. Cable T.V.

Ex. GTE Elec.

Ex. 8" City of Eastland Water Line

Guy

Top

Guy

15.7' TYP.

HLP

EASEMENT (MISC. BK. 654, PG. 229)

50'

Sta. 8+84.2, Construct Std. 5' Dia. Manhole. Top = 144.40 ✓

63.78'

137°8'21"

137°19'4"

For R.O.E. Line

10'

9.89'

12.26'

100.55'

Ex. 24" RCP To Remain in Place

IRR Sgn

CAUTION! 4" Gas, 8" Water & Cable T.V. Crossings. Verify Depths!

Sta. 8+62.1, Construct Std. 5' Dia. Manhole. Top = 144.40 ✓

Remove Fence As Necessary For Construction.

Mel Hambelton Addition
Lot 5 Ⓐ

344.94'

Lot 6

Ex. SS MH Top = 143.50 Per Plan

Ex. SS MH Top = 143.90 Per Plan

Ex. 8" SS Line

20' DRAINAGE & UTIL. EASEMENT

Ex. 8" Sanitary Sewer

20' K.G. & E. Right-of-way Easement per Film 2159, Page 354

133.64'

119°8'13"

Reserve "A"

Sta. 12+17.7, Match Point Construct Std. 5' Dia. Manhole. Top = 142.50 ✓

CAUTION! 8" SS Line Crossing! Verify Depth!

Ex. 8" SS

LINE 1

200.44'

HLP

100' R/W

CITY OF WICHITA

REVISED 12/10/21

Sta. 6+10.1 Match Point

Sta. 7+48.5, Construct Std. 5' Dia. Manhole. Top = 145.40 ✓

Sta. 8+62.1, Construct Std. 5' Dia. Manhole. Top = 144.40 ✓

Sta. 8+84.2, Construct Std. 5' Dia. Manhole. Top = 144.40 ✓

Sta. 12+17.7 Match Point Construct Std. 5' Dia. Manhole Top = 142.50 ✓

Existing Grade = Proposed Grade

Existing Grade = Proposed Grade

145
140
135

@ 119TH STREET

16" WTR Steel Cased

SWBT F/O

SWBT (Abond)

V+ PL Sta. 7+88.7

Sta. 8+13.7 8"x24"

4" Gas

8" Water

Cable T.V.

40 L.F. 30" Steel Casing

PVC (Assm Ltg)

138.4 L.F. 24" RCP @ +0.217%

LINE 1

113.6 L.F. 24" RCP @ +0.352%

LINE 1

LINE 1

22.1 L.F. 24" RCP @ +0.452%

333.5 L.F. 24" RCP @ +0.240%

LINE 1

Exist. 8" SS

Encase 8 L.F. 8" SS Line w/Flowable Fill

As Built 1/22 KK

133.80' = FL
133.90' = FL
133.99 = FL
134.09 = FL
134.20 = FL
134.30' = FL
134.48 = FL
134.66 = FL
134.70' = FL
134.80' = FL
134.90' = FL
135.00' = FL
135.04 = FL
135.16 = FL
135.29 = FL
135.40 = FL
135.52 = FL
135.64 = FL
135.76 = FL
135.80' = FL
135.90' = FL

6+10.1 6+50 7+00 7+48.5 8+00 8+50 8+62.1 8+84.2 9+00 9+50 10+00 10+50 11+00 11+50 12+00 12+17.7

MEL HAMBELTON ADDITION

LINE 1

CITY OF WICHITA, KANSAS

BAUGHMAN COMPANY P.A.
ENGINEERING, SURVEYING, & PLANNING
316-262-7271 • 316 ELLIS • WICHITA, KANSAS 67211

PROJECT NUMBER 1173 PPS (607691)

DESIGN	DRAWN	APPROVED	DATE	SCALE	SHEET
SCL	SCL	NSW	12/10/21	1"=20' 1"=5'	3r of 9

BENCHMARK:
City of Wichita Disc. 12.80' South of Concrete Slab, 13.00' North of Cable Guard Rail, and 85.50' East of Center Line of 119th Street West.
Elev. = 145.96 City Datum

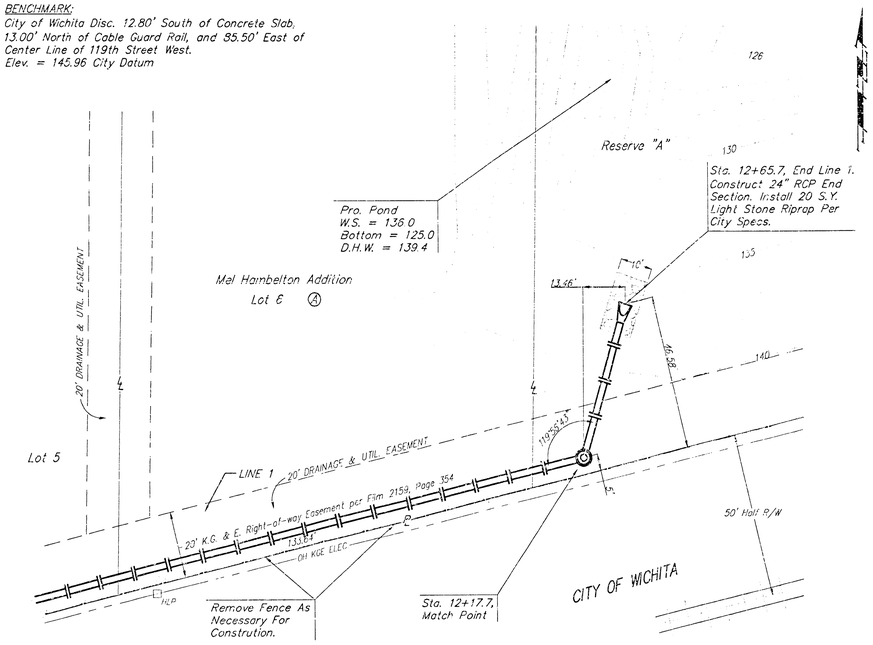

SCALE:
1" = 20' HORIZONTAL
1" = 5' VERTICAL
• = IRON

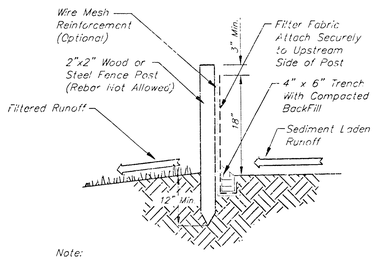

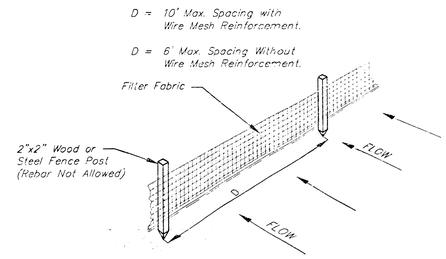

Note:
Type and manufacturer of Silt Fence shall be approved by the Engineer.
All alternates shall be approved by the Engineer.
All work and materials associated with installation of "Silt Fence" or approved alternate to be INCIDENTAL to the L.S. bid item "Storm Water Pollution Control."

SILT FENCE INSTALLATION DETAIL

REVISED 12/10/01

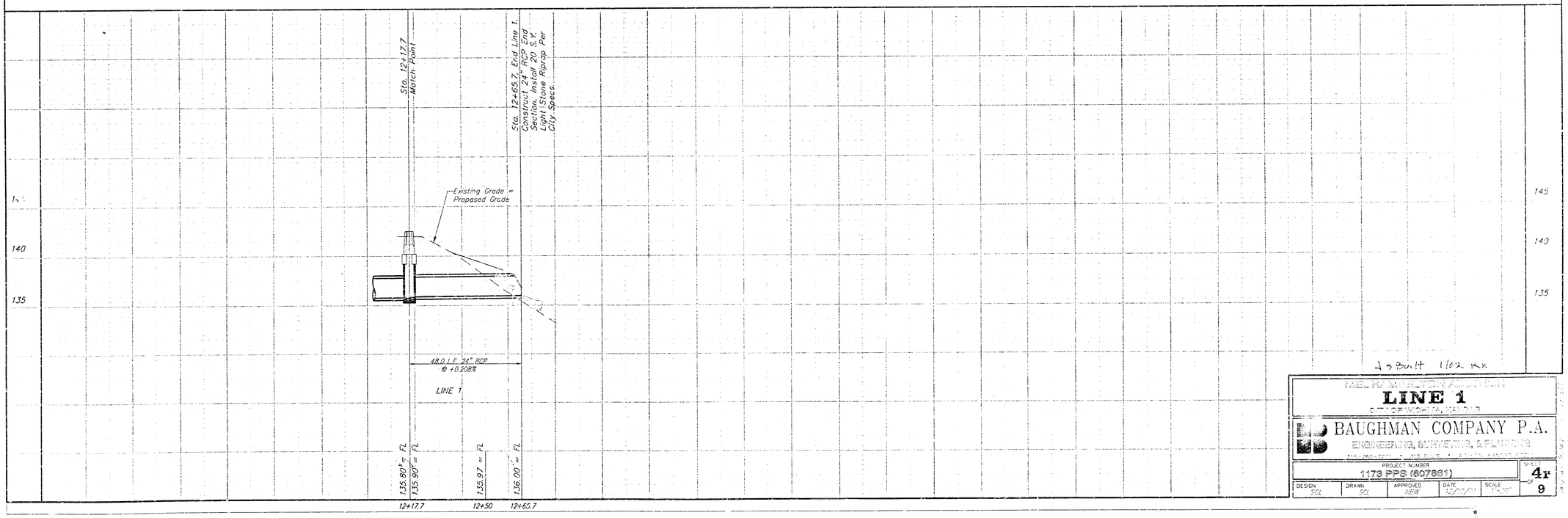

As Built 1/02 KK

LINE 1

BAUGHMAN COMPANY P.A.
ENGINEERING, SURVEYING & PLANNING

PROJECT NUMBER	SHEET
1173 PPS (607881)	4r 9

DESIGN	DRAWN	APPROVED	DATE	SCALE
SCL	SCL	NEW	12/10/01	1"=20'

BENCHMARK:
City of Wichita Disc. 12.80' South of Concrete Slab, 13.00' North of Cable Guard Rail, and 85.50' East of Center Line of 119th Street West.
Elev. = 145.96 City Datum

SCALE:
1" = 40'
• = IRON

Late-fill Pond Work By Owner

NE 1/4, Sec. 36, T27S, R2W
UNPLATTED

Contractor to install 475 L.F. of Silt Fencing Per Detail, Sht. 4.

Contractor to Install 180 L.F. of Silt Fencing Per Detail, Sht. 4.

W.E. Property Corner

LINE 1
(See Sht. 2)
20' Drainage Esm't "By Separate Instrument"

F.E.M.A. Special Flood Hazard Area Boundary (Zone A)

Install 53.7 L.F. 15" RCP w/End Sections. Install 20 S.Y. Light Stone Riprap Per City Specs. Both Ends

Mel Hambelton
3001 N. Broadway
Wichita, KS 67219

Drainage Easement "By Separate Instrument"

W.S. = 135.0
Bottom = 125.0
D.H.W. = 137.8

Install 800 S.Y. North American Green Type SC150 Erosion Control Mat or Approved Equivalent. (See Staple Pattern, This Sht.) To Be Installed Per Manufactures Recommendations.

Install 7,700 S.Y. North American Green Type SC150 Erosion Control Mat or Approved Equivalent. (See Staple Pattern, This Sht.) To Be Installed Per Manufactures Recommendations.

20' K.G. & E. Right-of-way Easement per Film 2159 Page 169

100' Central Kansas Railroad

UNPLATTED

POND BASE LINE

STAPLE PATTERN

STAPLE PATTERN "D"

3-1/2 staples per sq. yd. using 6-inch, 11 ga. w.e. "U" staples. 8-inch staples and longer may be used for loose soils. 9 ga. staples or heavier may be necessary in hard or rocky soils.

Contractor shall follow manufacturers installation instructions regarding overlap dimensions. The overlap shall have a minimum dimension of three inches (3").

Erosion control mat.

NOTES:

1. POND BOTTOM AND SIDESLOPES BELOW STATIC POOL ELEVATION SHALL BE OVER-EXCAVATED 1' AND A 1' CLAY LINER SHALL BE COMPACTED TO 95% STD. DENSITY. THE PLASTICITY INDEX (P.I.) SHALL BE AT LEAST 20. THE COMPACTION AND P.I. SHALL BE VERIFIED DURING CONSTRUCTION.
2. ANY EXCESS EXCAVATION SHALL BE STORED ON-SITE AT LOCATIONS TO BE DETERMINED BY THE ENGINEER.
3. ALL DISTURBED AREAS NOT COVERED BY PAVEMENT ARE TO BE SEEDED AND MULCHED AS FOLLOWS:
   SEED -- KANSAS PREMIUM FESCUE BLEND; 8#/1000 SQ. FT., DRILLED
   MULCH -- 2 TONS PRAIRIE HAY / ACRE, WHERE EROSION MAT IS NOT INSTALLED
   FERTILIZER -- 16-26-16 RATIO - 350 LBS./AC.
4. INSTALL SC150 EROSION CONTROL MAT FROM (133.00) TO THE PROPOSED HIGH BANK. CALL NORTH AMERICAN GREEN, INC. AT 1-800-772-2040 FOR MORE INFORMATION.
5. BAUGHMAN COMPANY CAN PROVIDE STAKING INFORMATION AT THE TIME OF CONSTRUCTION. CALL BAUGHMAN COMPANY FOR STAKING PROPOSAL.

EARTHWORK SUMMARY:
17,065 C.Y. EXCAVATION
3,588 C.Y. COMPACTED FILL
(NOTE: THIS QUANTITY IS TO ACHIEVE FINAL SHAPE OF POND. IT DOES NOT INCLUDE THE OVER-EXCAVATION OF 1' TO PLACE THE CLAY LINER. THIS QUANTITY DOES NOT INCLUDE ANY CORRECTION FACTORS AND IS FOR INFORMATION ONLY.)

SECTION A-A

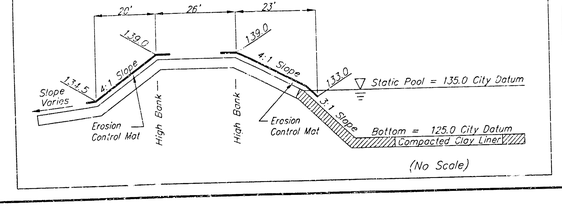

(No Scale)

SECTION B-B

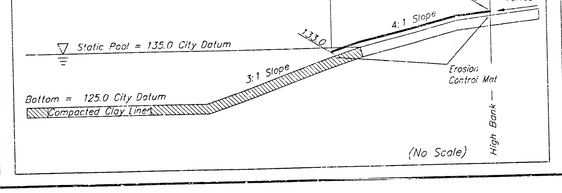

(No Scale)

SECTION C-C

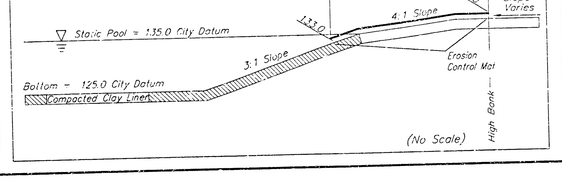

(No Scale)

POND PLAN

BAUGHMAN COMPANY P.A.

PROJECT NUMBER
1173 PPS (607861)

SHEET 5 OF 9

DESIGN	DRAWN	APPROVED	DATE	STAKE
SCI	SCI	RMH		

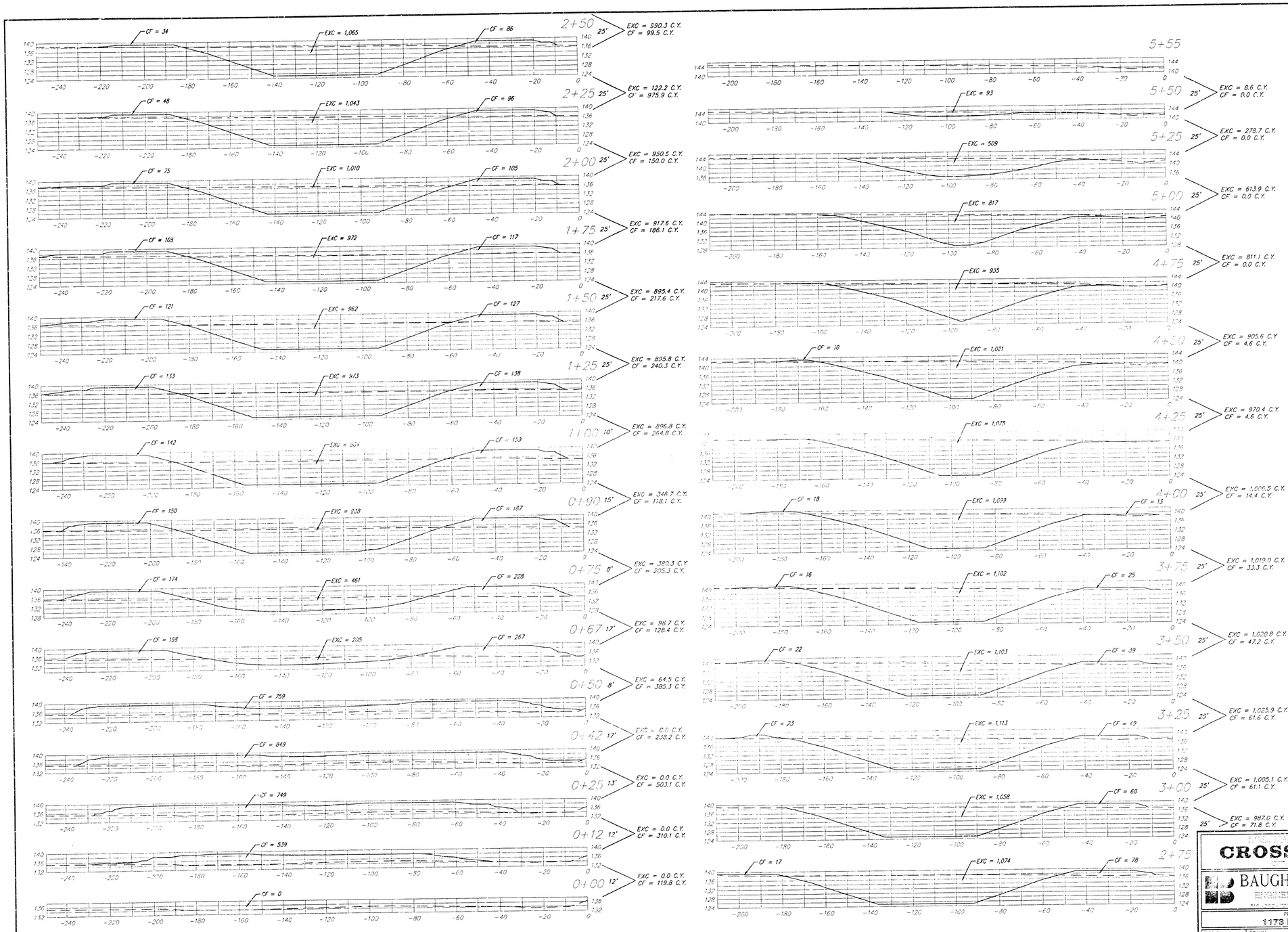

EARTHWORK TOTAL:
C.F. = 3,588 C.Y.
EXC. = 17,065 C.Y.

SCALE:
1" = 20' HORIZONTAL
1" = 20' VERTICAL

CROSS SECTIONS

BAUGHMAN COMPANY P.A.

ENGINEERING, SURVEYING, & PLANNING

PROJECT NUMBER					SHEET
1173 PPS (607861)					6 OF 9
DESIGN	DRAWN	APPROVED	DATE	SCALE	

SEWER APPURTENANCES DETAILS

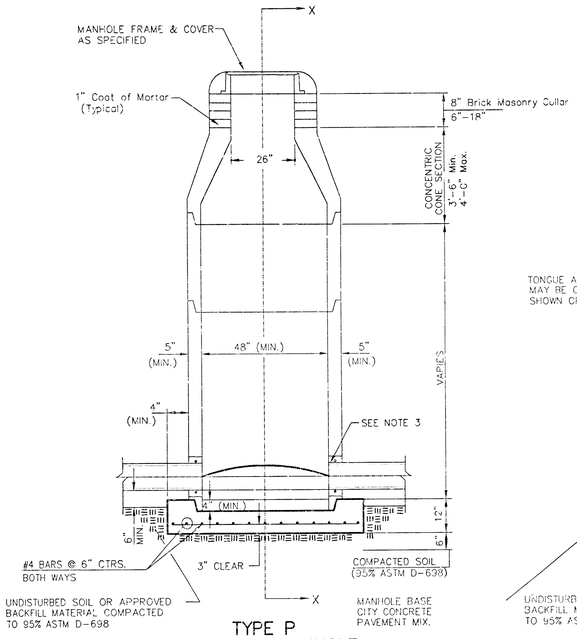

TYPE P
STANDARD MANHOLE

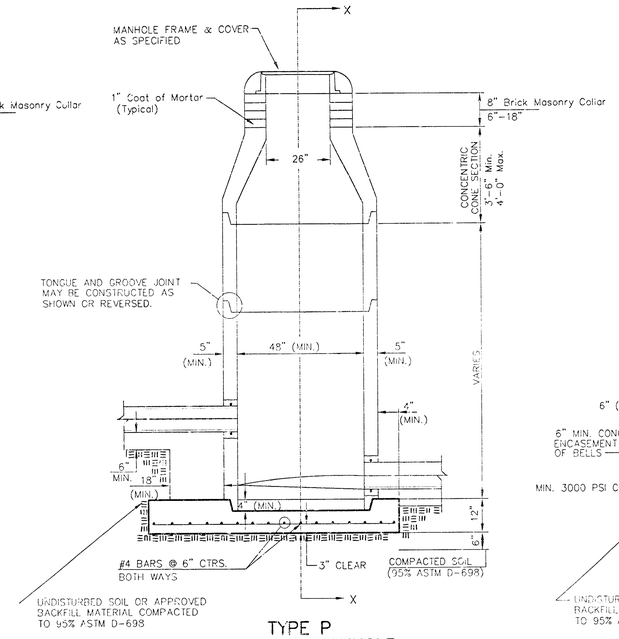

TYPE P
INSIDE DROP MANHOLE

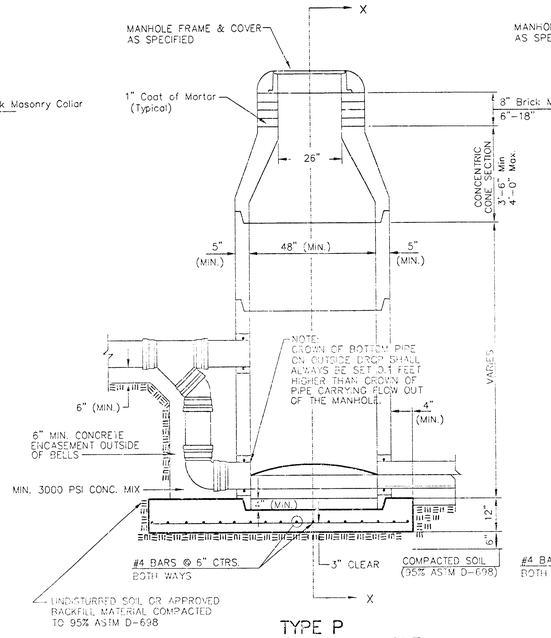

TYPE P
OUTSIDE DROP MANHOLE

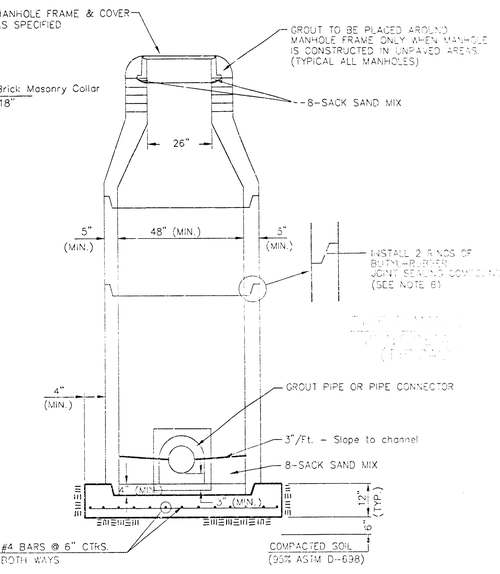

SECTION X
(TYPICAL)

GENERAL NOTES

PRECAST MANHOLE NOTES

1. ALL PRECAST CONCRETE MANHOLE SECTIONS SHALL CONFORM TO THE LATEST REVISIONS OF A.S.T.M. C478 AS MODIFIED BY THE SPECIFICATIONS.
2. NON-SHRINK GROUT SHALL BE NON-METALLIC TYPE.
3. APPROVED FLEXIBLE WATERSTOP GASKETS SHALL BE INSTALLED TO JOIN THE SEWER TO THE MANHOLE WALL WHEN A.B.S. COMPOSITE PIPE OR P.V.C. PIPE IS USED. FOR OTHER TYPES OF PIPE THE SEWER SHALL BE GROUTED IN PLACE WITH NON-SHRINK GROUT. THE SEWER PIPE SHALL BE SUPPORTED WITH CONCRETE ENCASEMENT A MINIMUM OF 3 FEET FROM THE MANHOLE WALL AND TO THE FIRST JOINT FOR V.C.P. SUCH THAT THE JOINT REMAINS FLEXIBLE.
4. ALL INSIDE SURFACES OF THE CONCRETE MANHOLE WHICH WOULD BE EXPOSED TO SEWER GAS SHALL BE COATED WITH 2 COATS TNEMEC SERIES 66 HI-BUILD EPOXOLINE, DRY THICKNESS OF 8 MILS (MIN.)
5. EXTERIOR MANHOLE WALLS SHALL BE COATED WITH 1 COAT MOBILARMA 633 BITUMINOUS COATING.
6. JOINT SEALING COMPOUND SHALL BE KENT SEAL NO. 2 OR APPROVED EQUAL.
7. PRECAST MANHOLES SHALL BE SET AT LEAST 4 INCHES INTO THE MANHOLE BASE.
8. TOP OF MANHOLE FLOOR SLAB SHALL BE AT LEAST 3 INCHES BELOW THE FLOW LINE OF THE OUTLET PIPE TO INSURE SUFFICIENT MINIMUM THICKNESS OF SHAPED INVERT.
9. LIFTING HOLES SHALL BE FILLED WITH NON-SHRINK GROUT AND THE INTERIOR SURFACE COATED AS SPECIFIED
10. MORTAR USED IN MASONRY CONSTRUCTION SHALL CONTAIN 8 SACKS OF CEMENT PER CUBIC YARD. CONCRETE USED IN MANHOLE BASES SHALL CONFORM TO THE REQUIREMENTS OF CONCRETE FOR CONCRETE PAVEMENT CONSTRUCTION AS SPECIFIED IN THE CITY STANDARD PAVING SPECIFICATIONS USING CITY CONCRETE PAVEMENT MIX WITHOUT AIR ENTRAINING ADMIXTURE. MORTAR SHALL BE PLACED AROUND THE MANHOLE RING AS SHOWN ON THE DRAWINGS WHEN MANHOLES ARE CONSTRUCTED IN UNPAVED AREAS. MANHOLES CONSTRUCTED WHERE PIPE SIZES ARE SMALLER THAN 24" SHALL HAVE AN INSIDE DIAMETER OF 4'. MANHOLES CONSTRUCTED WHERE PIPE SIZES ARE 24" OR LARGER SHALL HAVE AN INSIDE DIAMETER OF 5'. COMPLETED MANHOLE SHALL BE WITHOUT LEAKS AND WATER TIGHT.
11. REINFORCING STEEL SHALL BE INSTALLED IN THE MANHOLE BASES AND SHALL CONSIST OF NO. 4 BARS PLACED ON 6" CENTERS IN BOTH DIRECTIONS. THE MANHOLE BASE REINFORCEMENT SHALL BE PLACED AT LEAST 3" ABOVE THE BOTTOM OF THE MANHOLE BASE. ALL COSTS FOR FURNISHING AND INSTALLING REINFORCING STEEL SHALL BE INCLUDED IN THE UNIT PRICE BID FOR THE MANHOLE.
12. OPENINGS SHALL BE CUT INTO THE MANHOLE WALL WHEN OUTSIDE DROPS ARE CONSTRUCTED ON EXISTING MANHOLES. SUCH OPENINGS CUT INTO EXISTING MANHOLES SHALL BE AS SMALL AS PRACTICAL TO FACILITATE INSTALLING AND GROUTING THE NEW PIPE IN PLACE. WATERSTOP GASKETS SHALL BE USED WITH P.V.C. AND A.B.S. COMPOSITE PIPE. THE NEW PIPE SHALL BE GROUTED INTO THE OPENING USING AN APPROVED NON-SHRINK GROUT FOR THE FULL MANHOLE WALL THICKNESS. THE EXTERIOR OF THE COMPLETED CONNECTION SHALL BE SEALED WITH AN APPROVED BITUMINOUS COATING SUCH THAT THE CONNECTION WILL BE WATER TIGHT. FLOOR OF MANHOLE SHALL BE MODIFIED TO FORM NEW FLOW CHANNEL FOR THE NEW CONNECTION AS INDICATED BY THE DRAWING. THIS WORK, INCLUDING MODIFICATION OF MANHOLE FLOOR, SHALL BE PAID FOR AT THE UNIT PRICE BID FOR OUTSIDE DROP STACK CONSTRUCTED ON EXISTING MANHOLE.
13. THE FLOORS OF ALL MANHOLES SHALL BE SHAPED WITH FLOW CHANNELS SUCH THAT THE MANHOLES WILL BE SELF CLEANING AND FREE OF AREAS WHERE SOLIDS COULD BE DEPOSITED AS SEWAGE FLOWS THROUGH THE MANHOLE FROM ALL INLET PIPES TO THE OUTLET PIPE. FLOW CHANNELS SHALL BE FORMED TO MATCH THE BOTTOM HALVES OF THE INFLOWING PIPES AND THE OUTFLOWING PIPE AS SHOWN BY THE DRAWINGS EXCEPT FOR INSIDE DROP MANHOLES. FLOW CHANNELS FOR INSIDE DROP MANHOLES SHALL BE CONSTRUCTED AS INDICATED BY THE DRAWING. MANHOLE FLOORS SHALL HAVE SLOPES OF 3 INCHES PER FOOT IN THE AREAS OUTSIDE OF THE FLOW CHANNELS SLOPED TOWARD THE FLOW CHANNELS. PIPES LAID THROUGH MANHOLES SHALL HAVE THE TOP HALF REMOVED TO NEAT LINES FOR THE FULL INSIDE DIAMETER OF THE MANHOLE. MANHOLE FLOORS SHALL THEN BE SHAPED AROUND THE BOTTOM HALF OF THE PIPE WHICH FORMS THE FLOW CHANNEL.
14. PIPES INSTALLED WITHIN THE EXCAVATION MADE FOR THE MANHOLE SHALL BE CRADLED WITH CONCRETE TO THE LIMITS OF THE MANHOLE EXCAVATION. WHEN CLAY PIPE IS USED, THE CRADLE SHALL EXTEND TO THE FIRST JOINT OUTSIDE THE MANHOLE. THE CRADLE SHALL BE TERMINATED AT THE CLAY PIPE JOINT IN A MANNER WHICH WILL MAINTAIN THE FLEXIBILITY OF THE JOINT. COST OF CRADLE WITHIN MANHOLE EXCAVATION OR TO CLAY PIPE JOINTS ADJACENT TO MANHOLE SHALL BE INCLUDED IN THE UNIT PRICE BID FOR THE MANHOLE.
15. MANHOLE COVER CASTINGS AND MANHOLE FRAME CASTINGS SHALL CONFORM TO THE REQUIREMENTS AS INDICATED IN THE STANDARD SPECIFICATIONS AND AS SHOWN IN THE STANDARD DETAIL DRAWING.
16. THE VERTICAL DROP IN INSIDE DROP MANHOLES SHALL NOT EXCEED 2' FOR INFLOWING PIPES SIZED 12" OR SMALLER AND 2' FOR INFLOWING PIPES LARGER THAN 12". THE CROWNS OF INFLOWING PIPES SHALL NEVER BE SET LOWER THAN THE CROWN OF THE OUTFLOWING PIPE.
17. STANDARD MANHOLES AND STANDARD INSIDE DROP MANHOLES SHALL BE BID AS STANDARD MANHOLES FOR THE TYPE AND DIAMETER INDICATED. OUTSIDE DROP MANHOLES SHALL BE BID AS STANDARD OUTSIDE DROP MANHOLES FOR THE TYPE AND DIAMETER INDICATED. ALL MANHOLE DIAMETERS WILL BE 4' UNLESS INDICATED OTHERWISE.
18. A BRICK MASONRY COLLAR SHALL BE INSTALLED BETWEEN THE CAST IRON FRAME AND THE CONCENTRIC CONE. THE COLLAR WILL HAVE 8" WALLS AND A VERTICAL HEIGHT OF 6" MINIMUM AND 18" MAXIMUM. A 1" COAT OF MORTAR WILL BE PLASTERED ON THE OUTSIDE OF THE COLLAR. THE USE OF PRE-CAST CONCRETE SPACERS FOR MANHOLE TOP ADJUSTMENT IS ALSO ALLOWED.

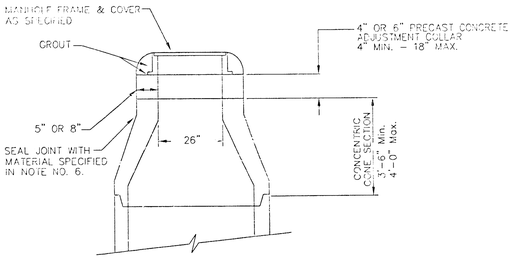

ALTERNATE CONSTRUCTION
IN UNPAVED AREAS

STD. MANHOLE DETAILS

BAUGHMAN COMPANY P.A.

ENGINEERING, SURVEYING & PLANNING

PROJECT NUMBER 1173 PPS (607861)

SHEET 7 OF 9

DESIGN	DRAWN	APPROVED	DATE	SCALE
STAFF	STAFF		5/93	

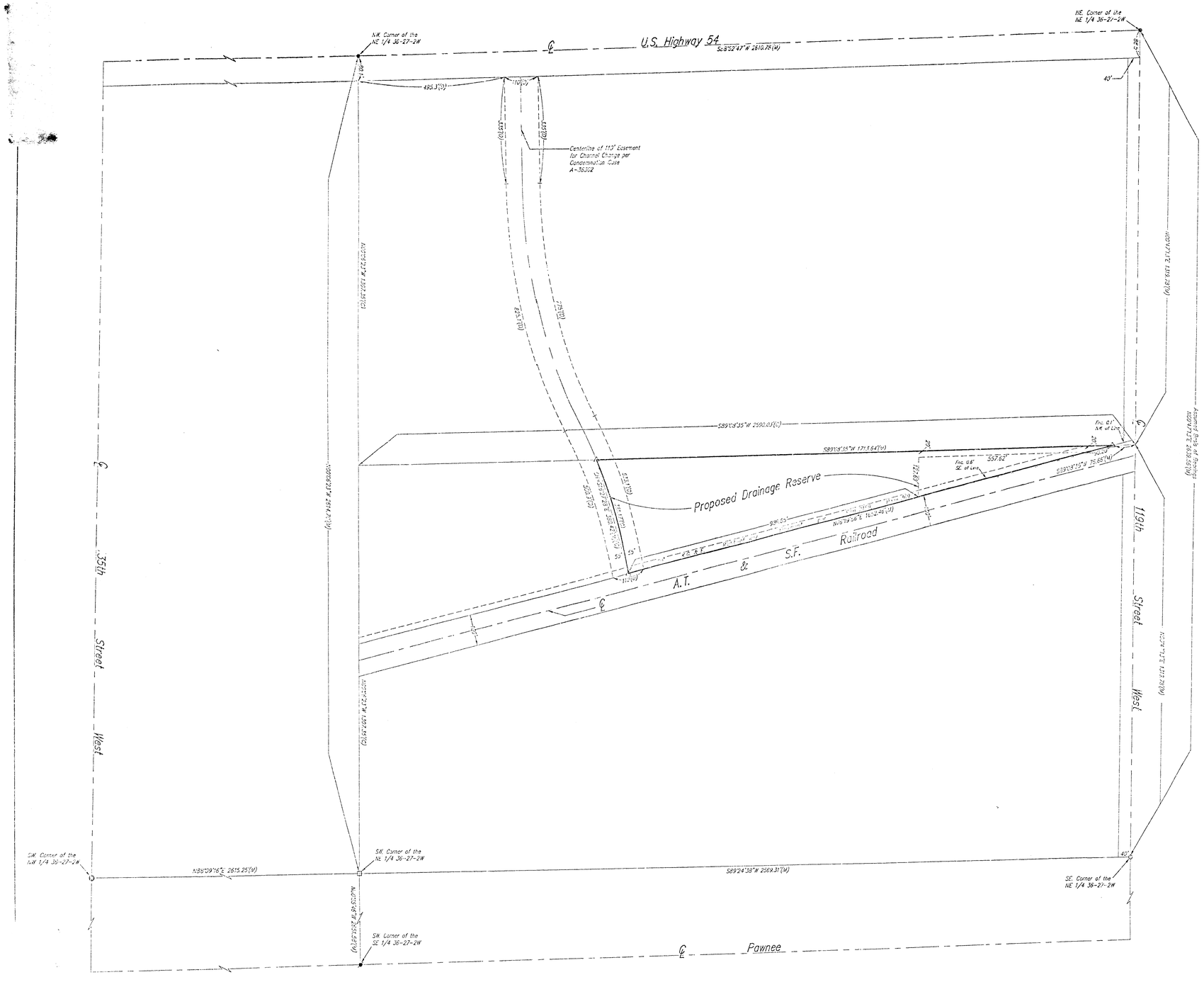

Mel Hambelton

State of Kansas)
) SS
County of Sedgwick)

September 21 , 2001

We, Baughman Company, P.A., Surveyors in aforesaid county and state do hereby certify that, under the supervision of the undersigned, we did on this 21st day of September 2001, survey a tract of land located in the South Half of the NE 1/4, Sec. 36, Twp. 27-S, R-2-W of the 6th P.M., Sedgwick County, Kansas, described as follows: That part of said South Half of said Quarter lying north of the North Right of Way line of the Atchinson, Topeka and Santa Fe Railroad, and lying east of the centerline of a channel easement described in Condemnation Case No. A-38302.

The accompanying sketch is a true and correct exhibit of said survey based on actual field measurements where the monuments are of the character and occupy the positions as indicated.

LENNY D. WOOD
REGISTERED
LS-1053
KANSAS
LAND SURVEYOR

NOTE: Baughman Company, P.A. has not researched any title examination of subject property. An abstract or title insurance company would need to be contacted to research and provide to us any easements, rights-of-ways or dedications.

This document should contain an original stamped seal and a surveyor's signature in blue ink. If it does not, it is a copy and should be assumed to contain unauthorized alterations. The certification on this document shall not apply to any copies.

0 150 300

● = #5 Rebar in Thimble (Found)
○ = 1/2" Iron Pipe in Thimble (Found)
□ = 1/2" Iron Pipe Over Broken Stone (Found)
△ = #4 Baughman Rebar (Set)
◎ = 3/4" Iron Pipe (Found)
■ = #4 Rebar Over Stone (Found)

(M) = Measured
(D) = Described
(C) = Calculated
CH = Chord

November 2, 2001

BAUGHMAN COMPANY P.A.
ENGINEERING, SURVEYING, & PLANNING
(316)-262-7271 • 316 ELLIS • WICHITA, KANSAS 67211

Project No. 01-09-E135

MEL HAMBELTON ADDITION
WICHITA, SEDGWICK COUNTY, KANSAS

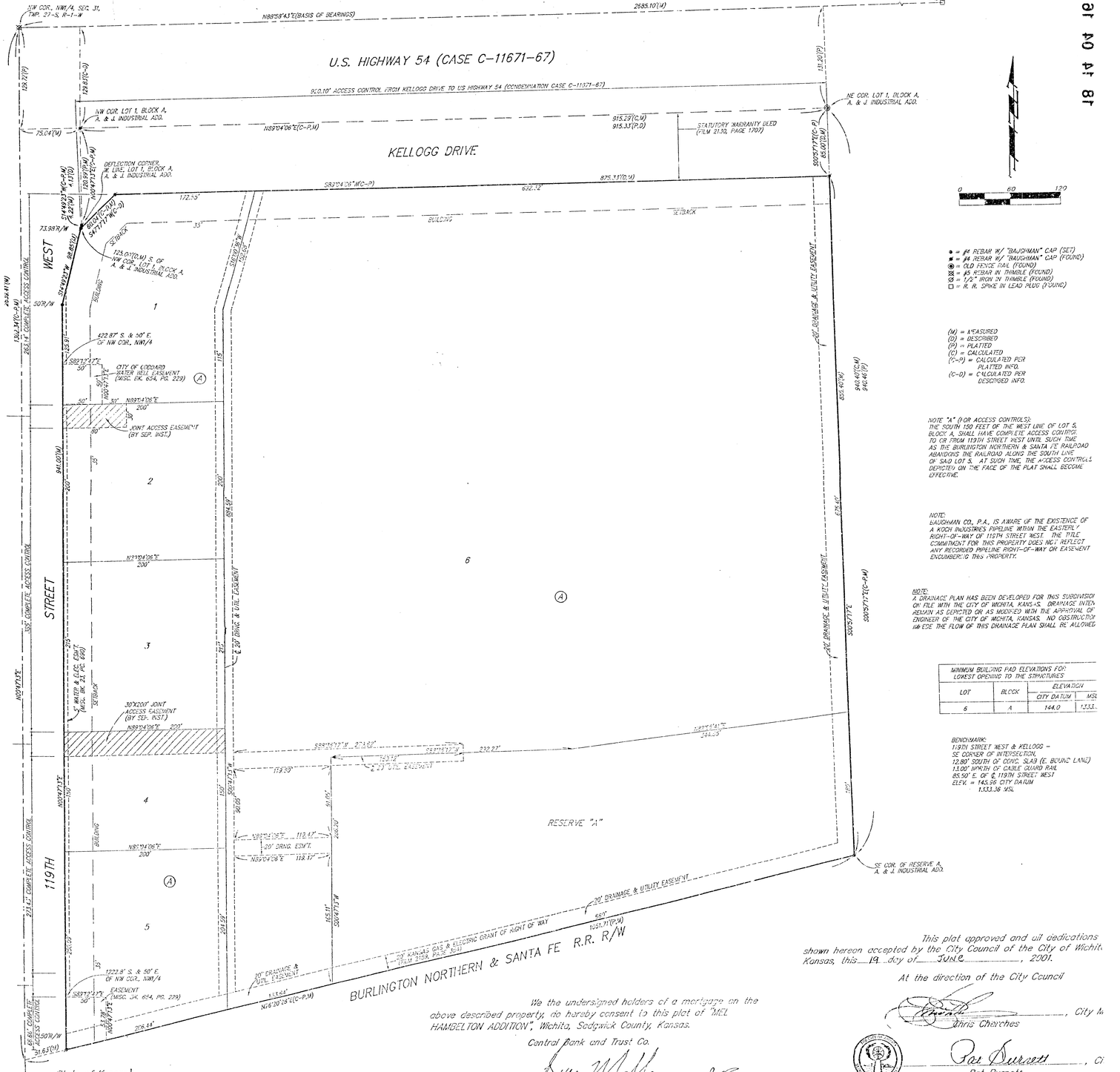

- ● = ¼ REBAR W/ "BAUGHMAN" CAP (SET)
- ■ = ¼ REBAR W/ "BAUGHMAN" CAP (FOUND)
- ◉ = OLD FENCE TAIL (FOUND)
- ⊠ = ⅝ REBAR IN THIMBLE (FOUND)
- ⊘ = 1/2" IRON IN THIMBLE (FOUND)
- □ = R. R. SPIKE IN LEAD PLUG (FOUND)

(M) = MEASURED
(D) = DESCRIBED
(P) = PLATTED
(C) = CALCULATED
(C-P) = CALCULATED PER PLATTED INFO.
(C-D) = CALCULATED PER DESCRIBED INFO.

NOTE "A" (FOR ACCESS CONTROLS): THE SOUTH 150 FEET OF THE WEST LINE OF LOT 6, BLOCK A, SHALL HAVE COMPLETE ACCESS CONTROL TO OR FROM 119TH STREET WEST UNTIL SUCH TIME AS THE BURLINGTON NORTHERN & SANTA FE RAILROAD ABANDONS THE RAILROAD ALONG THE SOUTH LINE OF SAID LOT 6. AT SUCH TIME, THE ACCESS CONTROLS DEPICTED ON THE FACE OF THE PLAT SHALL BECOME EFFECTIVE.

NOTE:
BAUGHMAN CO., P.A., IS AWARE OF THE EXISTENCE OF A KOCH INDUSTRIES PIPELINE WITHIN THE EASTERLY RIGHT-OF-WAY OF 119TH STREET WEST. THE TITLE COMMITMENT FOR THIS PROPERTY DOES NOT REFLECT ANY RECORDED PIPELINE RIGHT-OF-WAY OR EASEMENT ENCUMBERING THIS PROPERTY.

NOTE:
A DRAINAGE PLAN HAS BEEN DEVELOPED FOR THIS SUBDIVISION ON FILE WITH THE CITY OF WICHITA, KANSAS. DRAINAGE INTENT REMAIN AS DEPICTED OR AS MODIFIED WITH THE APPROVAL OF ENGINEER OF THE CITY OF WICHITA, KANSAS. NO OBSTRUCTION WHERE THE FLOW OF THIS DRAINAGE PLAN SHALL BE ALLOWED.

MINIMUM BUILDING PAD ELEVATIONS FOR LOWEST OPENING TO THE STRUCTURES			
LOT	BLOCK	ELEVATION	
		CITY DATUM	MSL
6	A	144.0	1,333.

BENCHMARK:
119TH STREET WEST & KELLOGG –
SE CORNER OF INTERSECTION,
12.80' SOUTH OF CONC. SLAB (E. BOUND LANE)
13.00' NORTH OF CABLE GUARD RAIL
85.50' E. OF ℄ 119TH STREET WEST
ELEV. = 145.98 CITY DATUM
1,333.36 MSL

State of Kansas) SS
Sedgwick County)

We, Baughman Company, P.A., Surveyors in aforesaid county and state do hereby certify that we have surveyed and platted "MEL HAMBELTON ADDITION", Wichita, Sedgwick County, Kansas and that the accompanying plat is a true and correct exhibit of the property surveyed, described as a replat of Lot 1, Block A, and Reserve A, A. & J. Industrial Addition, Sedgwick County, Kansas, EXCEPT that part of said Lot 1 described as follows: Beginning at the NE corner of said Lot 1; thence southerly along the east line of said Lot 1, 85.00 feet; thence westerly parallel with the north line of said Lot 1, 875.33 feet; thence southwesterly to a point on the west line of said Lot 1, said point being 125.00 feet south of the north line of said Lot 1, as measured perpendicularly; thence northeasterly along the west line of said Lot 1, 4.13 feet to a deflection corner in said west line; thence northerly along the west line of said Lot 1, 120.99 feet to the NW corner of said Lot 1; thence easterly along the north line of said Lot 1, 915.33 feet to the point of beginning.

Existing public easements and dedications being vacated by virtue of K.S.A. 12-512(b).

Baughman Company, P.A.

Michael G. Conrey LS-971 4-27-2001 Surveyor
Michael G. Conrey

Know all men by these presents that we, the undersigned, have caused the land in the surveyors certificate to be platted into Lots, a Block, and a Reserve, to be known as "MEL HAMBELTON ADDITION", Wichita, Sedgwick County, Kansas. The drainage and utility easements are hereby granted as indicated for drainage purposes and for the construction and maintenance of all public utilities. The drainage easements are hereby granted as indicated for drainage purposes. The streets are hereby dedicated to and for the use of the public. Reserve "A" is hereby reserved for drainage purposes, open space, landscaping, parking lot, access road, and utilities as confined to easements. Reserve "A" shall be owned and maintained by the owner of Lot 6, Block A. All abutters rights of access shall be as depicted on the face of the plat and hereby granted to the City of Wichita, Kansas. (see Note "A") The permitted opening locations shall be as determined by the City Engineer of the City of Wichita, Kansas. The Minimum Building Pad Elevations for the lowest opening to the structures shall be as indicated on this face of the plat.

Mel Hambelton Real Estate, L.L.C.

Mel Hambelton, Managing Member

We the undersigned holders of a mortgage on the above described property, do hereby consent to this plat of "MEL HAMBELTON ADDITION", Wichita, Sedgwick County, Kansas.

Central Bank and Trust Co.

BRICE MALLOY, ASST (Title)

State of Kansas) SS
Sedgwick County)

The foregoing instrument acknowledged before me, this 27th day of April, 2001, by BRICE MALLOY, ASST (Title) of Central Bank and Trust Co., on behalf of the bank.

A. FRED T. PETERSEN
Notary Public - State of Kansas
My Appt. Exp. 1-22-2003

FRED T. PETERSON, Notary Public

My App't. Exp. 1-22-2003

This plat of "MEL HAMBELTON ADDITION", Wichita, Sedgwick County, Kansas has been submitted to and approved by the Wichita-Sedgwick County Metropolitan Area Planning Commission, Wichita, Kansas.

Dated this 19th day of April, 2001.

Wichita-Sedgwick County Metropolitan Area Planning Commission

SEDGWICK COUNTY METROPOLITAN AREA PLANNING COMMISSION SEAL KANSAS

D. D. Michaelis, Acting Chair

Marvin S. Krout, Secretary

State of Kansas) SS
Sedgwick County)

The foregoing instrument acknowledged before me, this 27th day of APRIL, 2001, by Mel Hambelton, Managing Member of Mel Hambelton Real Estate, L.L.C., on behalf of the limited liability company.

A. FRED T. PETERSEN
Notary Public - State of Kansas
My Appt. Exp. 1-22-2003

Judith M. Peterson, Notary Public

This plat approved and all dedications shown hereon accepted by the City Council of the City of Wichita, Kansas, this 19 day of JUNE, 2001.

At the direction of the City Council

Chris Cherches, City M

Pat Burnett, Ci
Pat Burnett

Reviewed in accordance with K.S.A. 58-2
on this 2nd day of May, 2001.

Tricia L. Robello
Tricia L. Robello, L.S. #1246
Deputy County Surveyor
Sedgwick County, Kansas

Entered on transfer record this 26th of June, 2001.

Don Brace, Count
Don Brace

State of Kansas) SS
Sedgwick County)

This is to certify that this plat has been filed for record in the office of the Register of Deeds, this 26th of June, 2001 at 9:08 o'clock A. M. and is duly recorded

Bill Meek, Register of
Bill Meek

Land Records

#1986544

BAUGHMAN