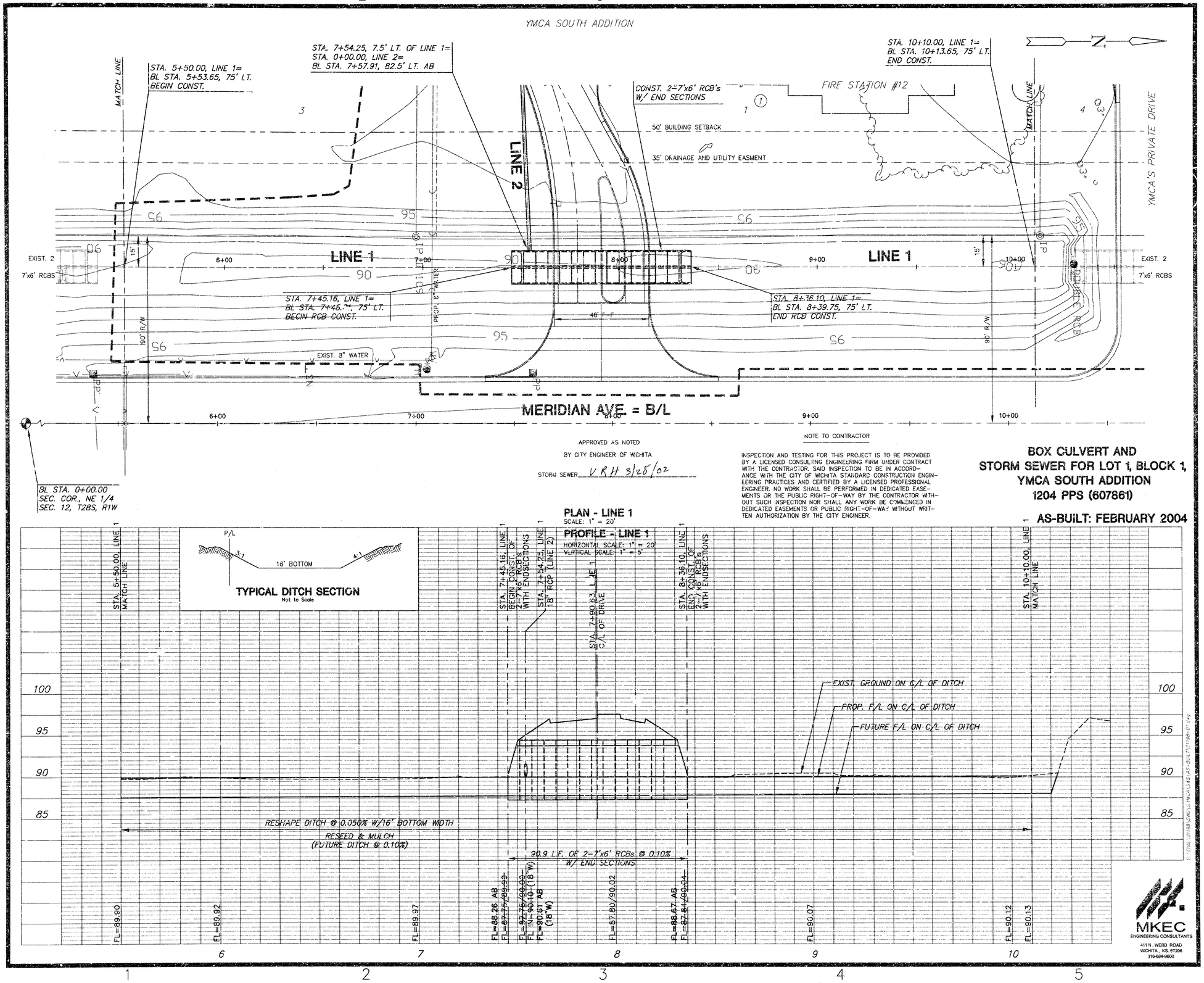

APPROVED AS NOTED

BY CITY ENGINEER OF WICHITA

STORM SEWER VRH 3/28/02

NOTE TO CONTRACTOR

INSPECTION AND TESTING FOR THIS PROJECT IS TO BE PROVIDED BY A LICENSED CONSULTING ENGINEERING FIRM UNDER CONTRACT WITH THE CONTRACTOR. SAID INSPECTION TO BE IN ACCORDANCE WITH THE CITY OF WICHITA STANDARD CONSTRUCTION ENGINEERING PRACTICES AND CERTIFIED BY A LICENSED PROFESSIONAL ENGINEER. NO WORK SHALL BE PERFORMED IN DEDICATED EASEMENTS OR THE PUBLIC RIGHT-OF-WAY BY THE CONTRACTOR WITHOUT SUCH INSPECTION NOR SHALL ANY WORK BE COMMENCED IN DEDICATED EASEMENTS OR PUBLIC RIGHT-OF-WAY WITHOUT WRITTEN AUTHORIZATION BY THE CITY ENGINEER.

BOX CULVERT AND STORM SEWER FOR LOT 1, BLOCK 1, YMCA SOUTH ADDITION 1204 PPS (607861)

AS-BUILT: FEBRUARY 2004

PLAN - LINE 1
SCALE: 1" = 20'

PROFILE - LINE 1
HORIZONTAL SCALE: 1" = 20'
VERTICAL SCALE: 1" = 5'

MKEC
ENGINEERING CONSULTANTS
411 N. WEBB ROAD
WICHITA, KS. 67206
316-684-9600

GossenLivingston
Architecture
420 South Emporia
Wichita, KS 67202
Tel: (316) 265-9367
Fax: (316) 265-5646
Email: architects@gjal.com

Fire Station No. 12
3443 S. Meridian

2001 Gossen Livingston Associates, Inc.

All work herein is the exclusive property of Gossen Livingston Associates, Inc. and is not to be copied or used in any way without the express written consent of Gossen Livingston Associates, Inc. All drawings, specifications, ideas, designs and arrangements appearing herein constitute the original and unpublished Work of:

Gossen Livingston Associates, Inc.

Regional Library & Fire Stations (No. 4, 7, 12, 13, & 19) for the City of Wichita, Kansas

Mark	Date:	Description	Mark	Date:	Description

STORM WATER SEWER PLAN & PROFILE

Job No.	1036.000
Date	01/25/02
Drawn	GJR
Checked	JTC
1204 PPS	

C-CU102 OF Dwg. 8 of 56

1 of 4

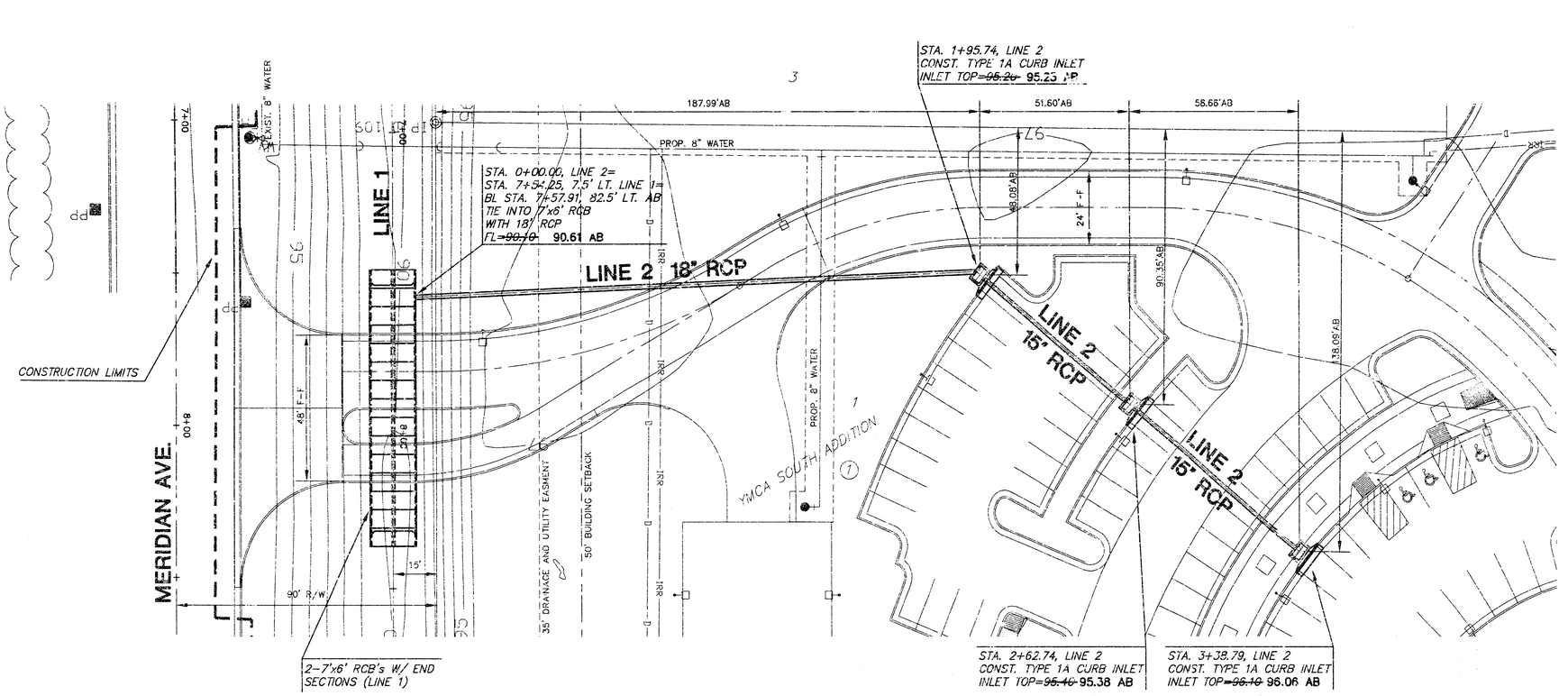

PLAN - LINE 2
SCALE: 1" = 20'

PROFILE - LINE 2
HORIZONTAL SCALE: 1" = 20'
VERTICAL SCALE: 1" = 5'

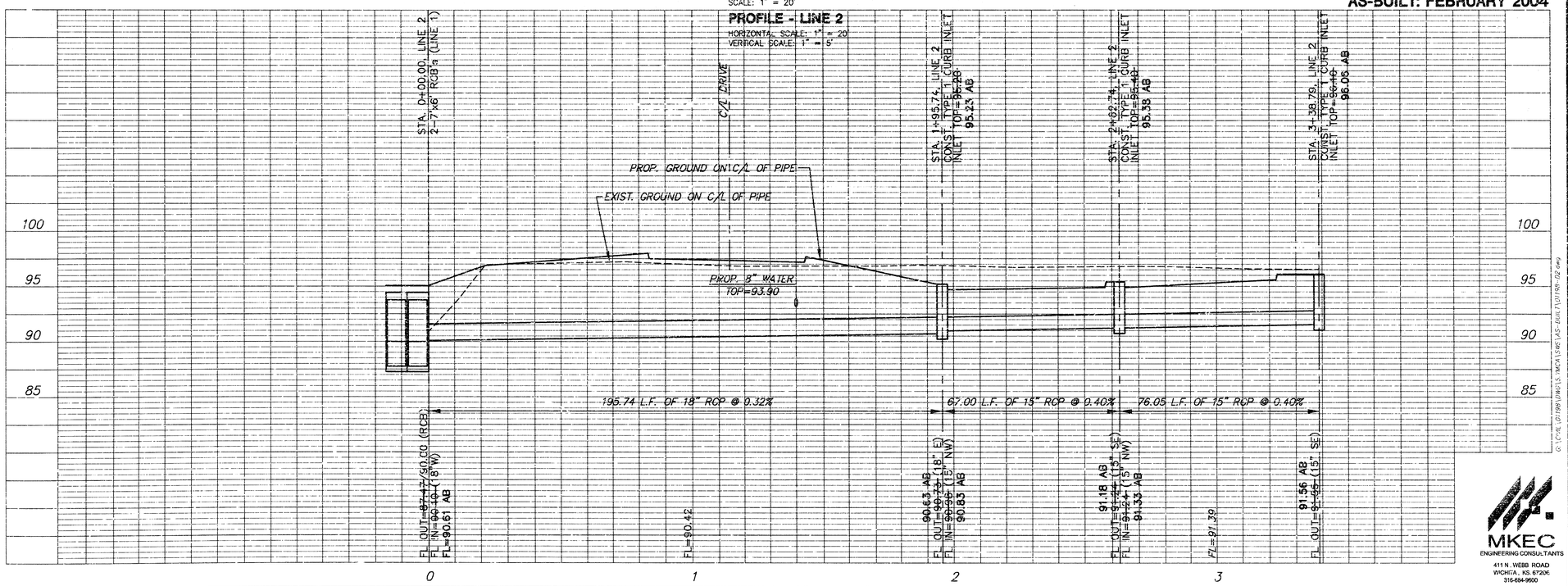

1204 PPS (607861)
AS-BUILT: FEBRUARY 2004

MKEC
ENGINEERING CONSULTANTS
411 N. WEBB ROAD
WICHITA, KS. 67206
316-684-9600

GossenLivingston
Architecture
420 South Emporia
Wichita, KS 67202
Tel: (316) 265-9367
Fax: (316) 265-5646
Email: architects@gl.com

Fire Station No. 12
3443 S. Meridian

2001 Gossen Livingston Associates, Inc.

All work herein is the exclusive property of Gossen Livingston Associates, inc. and is not to be copied or used in any way without the express written consent of Gossen Livingston Associates, inc. All drawings, specifications, ideas, designs and arrangements appearing herein constitute the original and unpublished work of:

Gossen Livingston Associates, Inc.

Regional Library & Fire Stations (No. 4, 7, 12, 13, & 19) for the City of Wichita, Kansas

Mark	Date:	Description

STORM WATER SEWER PLAN & PROFILE

Job No. 1036.000	C-CU103
Date 01/25/02	OF
Drawn	Dwg. 9 of 56
Checked	
1204 PPS	2 of 4

PLAN

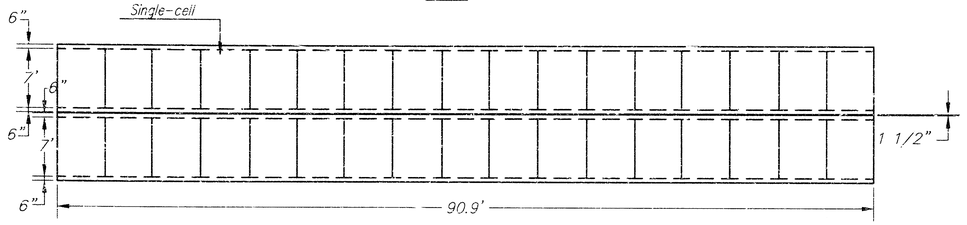

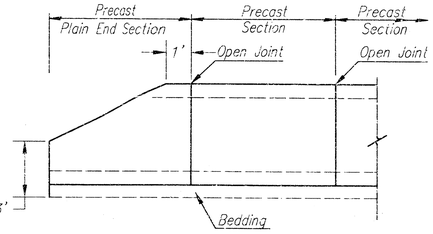

ELEVATION AT PRECAST END SECTION

(Precast End Sections are permitted where straight wings are shown in the plans or at the downstream end for single cell RCB with a rise of six feet or less.)

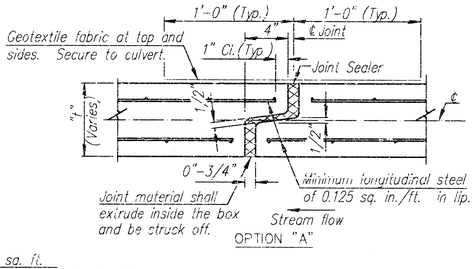

OPTION "A"

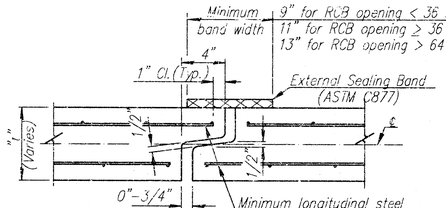

OPTION "B"

OPEN JOINT DETAIL

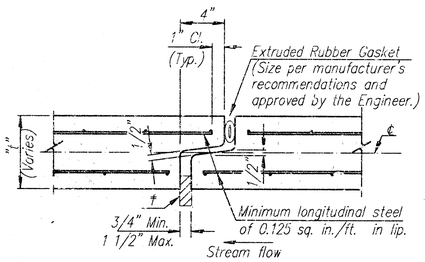

OPTION "C"

† Insert temporary, 3/4"-1" wide, hardwood wedges to prevent over-compressing gasket.

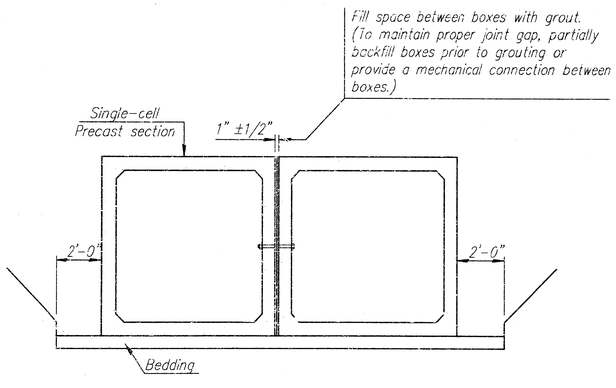

TYPICAL INSTALLATION DETAILS

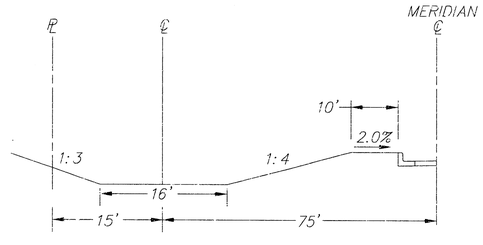

TYPICAL DITCH SECTION

GENERAL NOTES

PRECAST BOX CULVERTS: If precast box culverts are specified, they shall be constructed at the locations shown in the plans and according to the requirements shown on this sheet. When approved by the Engineer, cast-in-place box culverts may be constructed in lieu of precast box culverts. When the cast-in-place option is chosen by the Contractor, the precast quantities shall be used as the basis of payment which shall include all labor, equipment, materials, and incidentals necessary to complete the installation.

Unless otherwise approved by the Engineer, cast-in-place collars shall be required at horizontal and vertical changes in RCB alignment. Cast-in-place end sections and wingwalls are required except as noted on this sheet. Cast-in-place sections may be required at the direction of the Engineer at junctions of drainage structures.

Cast-in-place concrete work shall be done in accordance with the KDOT Specifications and KDOT's "Guidelines for Structural Design and Detail of Reinforced Concrete Box Culverts". Class AAA Concrete and Grade 60 Reinforcing Steel shall be used for the cast-in-place construction.

SPECIFICATIONS: Single-cell Precast Concrete Box Culverts shall conform to the requirements of the following specifications except as noted in the KDOT Specifications. Multiple-cell Precast Boxes shall be designed in accordance with the criteria used to develop the single-cell precast boxes. (See Appendices of ASTM Specifications C789 and C850 and the latest AASHTO Specifications.)

Condition	Min. Fill	AASHTO	Equiv. ASTM
2 Ft. or more fill	2 Ft.	M259, Table 2	C789, Table 2
Less than 2 Ft. fill	0 Ft.	M273, Table 2	C850, Table 2

FABRICATION: Prior to fabrication, the Contractor shall furnish shop drawings to the Engineer for review. Shop drawings shall detail all phases of construction including layout, joint details, lifting devices, casting methods, construction placement and details of any cast-in-place segments or transitions that may be required. Copies of overweight and overload permits, when required, shall be submitted with the shop drawings.

The following information shall be legibly marked on an inside face of each box section by waterproof paint or other approved means:

a) Date of manufacture
b) Name or trademark and location of the manufacturer
c) Weight of box section in tons
d) Piece mark
e) The top of the box

CONSTRUCTION REQUIREMENTS: Foundation preparation shall be in accordance with KDOT Specifications except that a minimum 6 inch thickness of crushed stone for backfill or 3 inch seal course shall be provided. Choice of bedding shall be at the Contractor's option and approved by the Engineer.

Precast concrete box culvert shall be laid with the groove end of each section up-grade, and the sections shall be tightly joined. Joint shall be sealed with an approved bituminous mastic material and geotextile or sealing band or an extruded rubber gasket, installed in accordance with the recommendations of the manufacturer. Lifting holes shall be plugged with a precast plug, sealed and covered with mastic or mortar.

1204 PPS (607861)

MKEC ENGINEERING CONSULTANTS
411 N. WEBB ROAD
WICHITA, KS. 67206
316-684-9600

Coman Livingston
Architecture
420 South Emporia
Wichita, KS 67202
Tel: (316) 265-9367
Fax: (316) 265-5646
Email: architects@ykl.com

14371
3-08-02

Fire Station No. 12
3443 S. Meridian

2001 Coman Livingston Associates, Inc.

All work herein is the exclusive property of Coman Livingston Associates, Inc. and is not to be copied or used in any way without the express written consent of Coman Livingston Associates, Inc. All drawings, specifications, these designs and arrangements appearing herein constitute the original and unpublished Work of:

Coman Livingston Associates, Inc.

Regional Library & Fire Stations (No. 4, 7, 12, 13, & 19) for the City of Wichita, Kansas

Mark	Date:	Description

RCB CULVERT DETAILS

Job No. 1036.000	C-CU502
Date 01/25/02	OF
Drawn	Dwg. 12 of 56
Checked	
1204 PPS	3 of 4

S:\CIVIL\01980\DWGS\YKCAISAC\YKCA_DET.DWG Mon Mar 25 13:51:30 2002

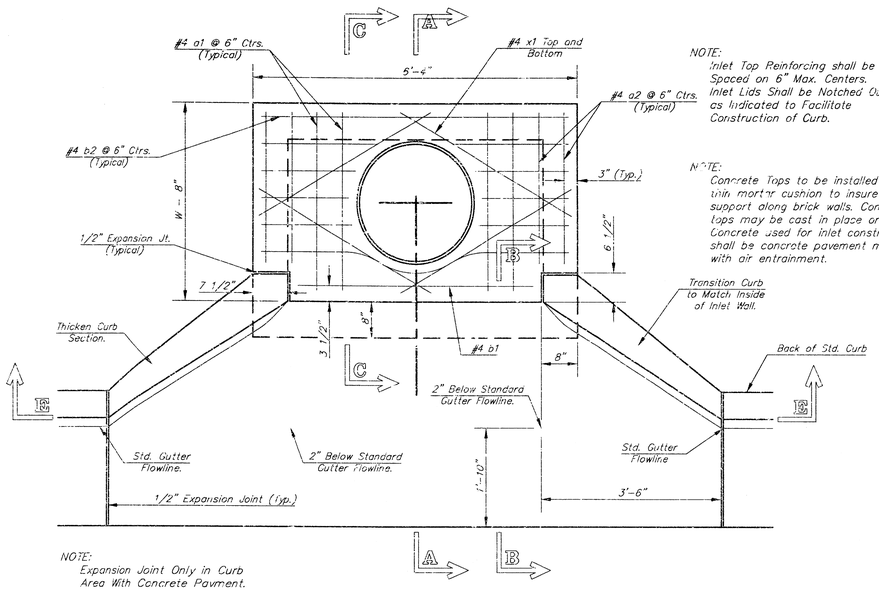

NOTE:
Inlet Top Reinforcing shall be Spaced on 6" Max. Centers. Inlet Lids Shall be Notched Out as Indicated to Facilitate Construction of Curb.

NOTE:
Concrete Tops to be installed on thin mortar cushion to insure full support along brick walls. Concrete tops may be cast in place or precast. Concrete used for inlet construction shall be concrete pavement mix with air entrainment.

NOTE:
Expansion Joint Only in Curb Area With Concrete Pavment.

PLAN

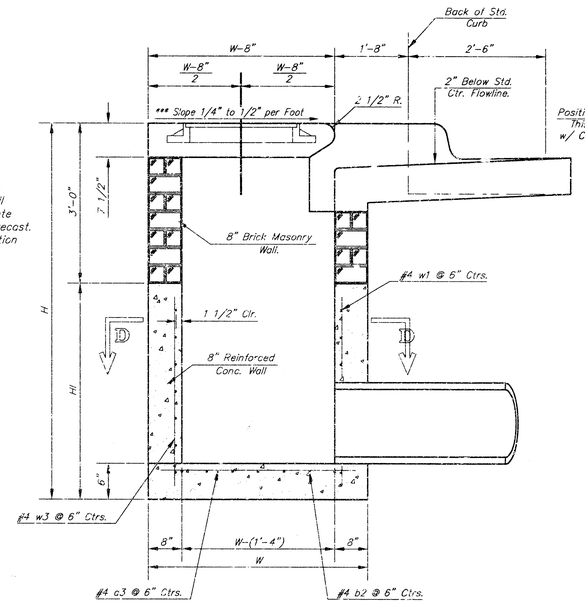

SECTION A-A

***NOTE: Slope of inlet tops to Match Sidewalk or Parking Slopes within Limits Indicated.

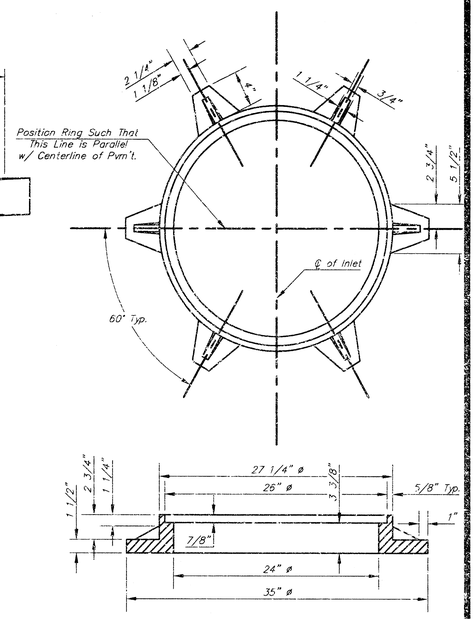

MANHOLE RING AND COVER

Weight = 180 Lbs.

*See City of Wichita Standard Manhole Ring and Cover Detail Sheet for Cover Details to Be Used With Inlet Frame.

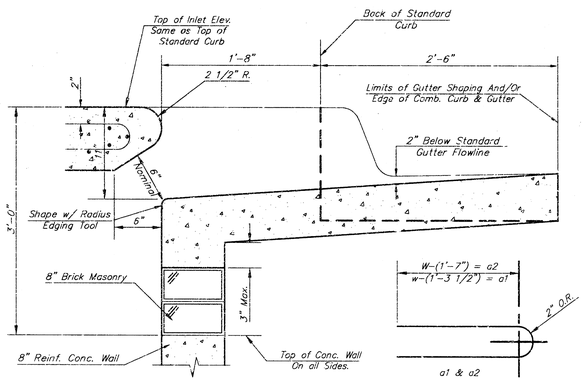

SECTION B-B BENDING DIAGRAM

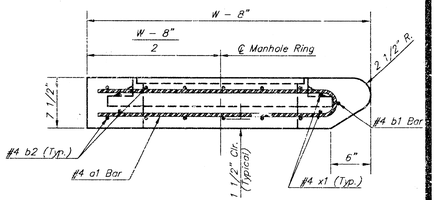

SECTION A-A

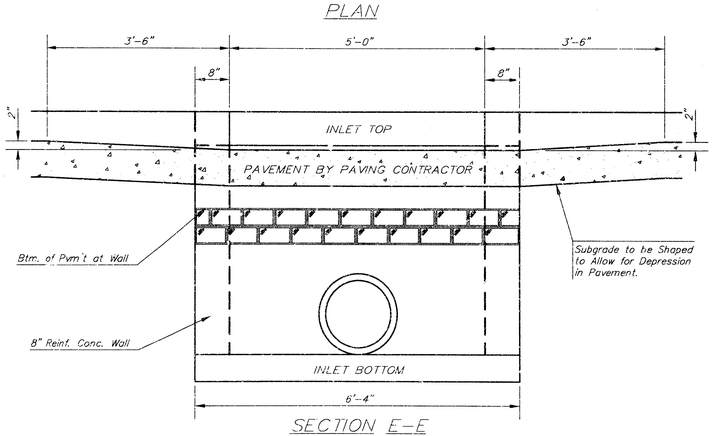

SECTION E-E

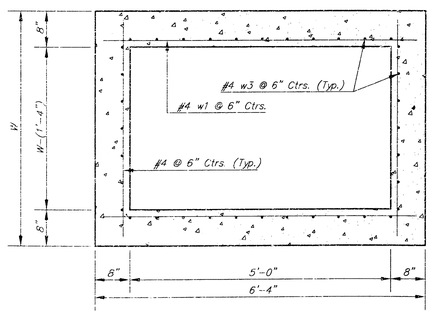

SECTION D-D

NOTE: Contractor shall have the option of constructing 8" brick masonry walls between the concrete inlet base and top on this inlet when W=6'-4" and H=7'-0" or less.

Additional curb and gutter construction necessary to connect set-back inlet to pavement will be paid for at the unit price bid for each inlet hookup.

Inlet invert shall be shaped with 8 sack sand mix concrete to create flow channels and to increase hydraulic efficiency such that the inlet will be self-cleaning between all inlet and/or outlet pipes.

The ends of all pipes installed in inlets shall be cut off flush with the inside face of the inlet wall

PRECAST SLAB AND FLOOR REINFORCING

		W = 4'-4"		W = 5'-4"		W = 6'-4"		W = 7'-4"		W = 8'-4"	
MARK	SIZE	NO.	LENGTH	NO.	LENGTH	NO.	LENGTH	NO.	LENGTH	NO.	LENGTH
* a1	#4	5	6'-7"	6	8'-7"	6	10'-7"	6	12'-7"	6	14'-7"
a2	#4	4	6'-0"	4	8'-0"	4	10'-0"	4	12'-0"	4	14'-0"
a3	#4	13	4'-1"	13	5'-1"	13	6'-1"	13	7'-1	13	8'-1"
b1	#4	1	4'-9"	1	4'-9"	1	4'-9"	1	4'-9"	1	4'-9"
* b2	#4	23	6'-1"	29	6'-1"	35	6'-1"	41	6'-1"	47	6'-1"
x1	#4	8	3'-10"	8	4'-2"	8	4'-6"	8	4'-10"	8	5'-2"

WALL REINFORCING

		W = 4'-4"		W = 5'-4"		W = 6'-4"		W = 7'-4"		W = 8'-4"	
MARK	SIZE	NO.	LENGTH	NO.	LENGTH	NO.	LENGTH	NO.	LENGTH	NO.	LENGTH
w1	#4	①	6'-1"	①	6'-1"	①	6'-1"	①	6'-1"	①	6'-1"
w2	#4	①	4'-1"	①	5'-1"	①	6'-1"	①	7'-1"	①	8'-1"
w3	#4	32	②	36	②	40	②	44	②	48	②

* Field Bend or Cut Reinforcing as Required for Clearance.

① 4 (Hi - 12") (Hi - 21") Rounded down to nearest 0.5'

② Hi - 3"

STANDARD CURB INLET PRECAST TOPS

W	PRE-CAST TOP SIZE	PIPE SIZE	CU. YD. CONC.
4'-4"	3'-8" x 6'-4" x 7 1/2"	21" & SMALLER	0.38±
5'-4"	4'-8" x 6'-4" x 7 1/2"	24" & 30"	0.51±
6'-4"	5'-8" x 6'-4" x 7 1/2"	36" & 42"	0.64±
7'-4"	6'-8" x 6'-4" x 7 1/2"	48" & 54"	0.77±
8'-4"	7'-8" x 6'-4" x 7 1/2"	60" & 66"	0.90±

1204 PPS (607861)

MKEC
ENGINEERING CONSULTANTS
411 N. WEBB ROAD
WICHITA, KS. 67206
316-634-9600

GossenLivingston
Architecture
420 South Emporia
Wichita, KS 67202
Tel: (316) 265-9367
Fax: (316) 265-5646
Email: architects@gbl.com

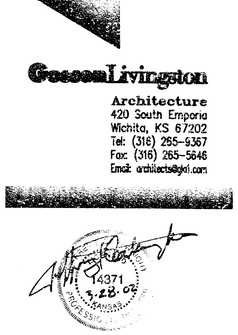

Fire Station No. 12
3443 S. Meridian

2001 Gossen Livingston Associates, Inc.

All work herein is the exclusive property of Gossen Livingston Associates, Inc. and is not to be copied or used in any way without the express written consent of Gossen Livingston Associates, Inc. All drawings, specifications, ideas designs and arrangements appearing herein constitute original and unpublished Work of:

Gossen Livingston Associates, Inc.

Regional Library & Fire Stations (No. 4, 7, 12, 13, & 19) for the City of Wichita, Kansas

Mark	Date	Description

CURB INLET DETAILS

Job No. 1036.000
Date 01/25/02
Drawn
Checked
1204 PPS

C-CU503
OF
Drg. 13 of 56
4 of 4

G:\CIVIL\01\1204\DWGS\PROJ\SHEETS\PROJ_2002.DWG Tue Mar 26 08:26:34 2002

Je 03 01 18