

LOCATION MAP

PRIVATE
STORM SEWER PLANS FOR
NORTH EAST MIDDLE SCHOOL
USER CODE 1214 PPS
OCA NO. 607861

CITY OF WICHITA, KANSAS
MICHAEL E. LINDEBAK, CITY ENGINEER

APPROVED AS NOTED
BY CITY ENGINEER OF WICHITA

STORM SEWERS VR Huang 3/1/02

NOTE TO CONTRACTOR

INSPECTION AND TESTING FOR THIS PROJECT IS TO BE PROVIDED BY A LICENSED CONSULTING ENGINEERING FIRM UNDER CONTRACT WITH THE OWNER/DEVELOPER. SAID INSPECTION TO BE IN ACCORDANCE WITH THE CITY OF WICHITA STANDARD CONSTRUCTION ENGINEERING PRACTICES AND CERTIFIED BY A LICENSED PROFESSIONAL ENGINEER. NO WORK SHALL BE PERFORMED IN DEDICATED EASEMENTS OR THE PUBLIC RIGHT-OF-WAY BY THE CONTRACTOR WITHOUT SUCH INSPECTION NOR SHALL ANY WORK BE COMMENCED IN DEDICATED EASEMENTS OR PUBLIC RIGHT-OF-WAY WITHOUT WRITTEN AUTHORIZATION BY THE CITY ENGINEER.

GENERAL NOTES

1. THE TOPS OF INLETS AS NOTED ON THE PLANS MAY VARY SO AS TO MEET PROPOSED TOP OF CURB ELEVATIONS OR PAVEMENT ELEVATIONS. THE FIELD ENGINEER SHALL LOCATE INLETS WITH REFERENCE TO PROPOSED PAVING PLANS OF THE PERTINENT STREETS.

2. ALL CONCRETE SHALL BE STANDARD PAVING MIX UNLESS OTHERWISE NOTED.

3. THE CONTRACTOR SHALL BE RESPONSIBLE FOR PRESERVING PROPERTY IRONS. THE CONTRACTOR SHALL BE REQUIRED TO RE-ESTABLISH ANY PROPERTY IRONS WHICH ARE DAMAGED OR DESTROYED BY HIS CONSTRUCTION OPERATIONS. SUCH IRONS SHALL BE RE-ESTABLISHED BY A LICENSED LAND SURVEYOR IN ACCORDANCE WITH STATE LAWS.

4. TREES TO BE REMOVED ARE MARKED . ALL TREES WHICH IN THE OPINION OF THE FIELD ENGINEER CAN BE SAVED, SHALL BE SAVED.

5. EXISTING UTILITIES AND THEIR LOCATIONS, AS SHOWN ON THE PLANS REPRESENT THE BEST INFORMATION OBTAINABLE FOR DESIGN. LOCATION INFORMATION HAS BEEN OBTAINED FROM THE VARIOUS COMPANIES AND IS EITHER FROM COMPANY UTILITY DRAWINGS OR COMPANY PROVIDED FIELD LOCATIONS. THE PLAN LOCATIONS SHOWN ARE NOT GUARANTEED. ADDITIONAL EXISTING UTILITIES MAY ALSO BE ENCOUNTERED.

6. CONTRACTOR WILL BE REQUIRED TO PROVIDE A MINIMUM ADVANCE NOTICE OF FORTY-EIGHT (48) HOURS TO UTILITY COMPANIES PRIOR TO STARTING ANY EXCAVATION AS FOLLOWS:

   KANSAS ONE-CALL 1-800-344-7233

   THE CONTRACTOR MUST NOTIFY THE FOLLOWING IN CASE OF AN EMERGENCY:

CABLEVISION	263-2061
ARKLA GAS COMPANY	263-7511
KANSAS GAS & ELECTRIC	264-1141
SOUTHWEST BELL TELEPHONE COMPANY	1-571-2611
CITY OF WICHITA WATER & SEWER MAINT.	262-6000

7. UNLESS SHOWN OR STATED OTHERWISE ON THESE DRAWINGS, MATERIALS AND CONSTRUCTION SHALL BE IN ACCORDANCE WITH CITY OF WICHITA SPECIFICATIONS.

8. RUBBLE FROM THE REMOVAL OF MISCELLANEOUS STRUCTURES AND EXCESS EXCAVATION WHICH IS TO BE WASTED SHALL BE DISPOSED OF ON SITES TO BE PROVIDED BY THE CONTRACTOR. THESE SITES SHALL BE APPROVED BY THE ENGINEER AS TO SUITABILITY, APPEARANCE AND SITE LOCATION. LOCATIONS THAT, IN THE OPINION OF THE ENGINEER, WILL LEAVE AN UNSIGHTLY APPEARANCE WILL NOT BE APPROVED. ALL DISPOSAL SITES MUST BE APPROVED BY THE KANSAS DEPARTMENT OF HEALTH AND ENVIRONMENT. MATERIAL EITHER STOCKPILED OR DISPOSED OF IN A FLOOD PLAIN WOULD REQUIRE A KANSAS STATE BOARD OF AGRICULTURE PERMIT. ANY MATERIAL DUMPED IN WATERS OF THE UNITED STATES OR WETLANDS IS SUBJECT TO U.S. CORPS OF ENGINEERS PERMITTING REGULATIONS. ANY MATERIAL BURIED OR STOCKPILED BEYOND APPROVED CONSTRUCTION LIMITS WOULD REQUIRE ADDITIONAL ARCHAEOLOGICAL INVESTIGATIONS UNLESS BURIED IN A PREVIOUSLY APPROVED BORROW LOCATION.

9. SITE RESTORATION AND PREPARATION SHALL BE SUBSIDIARY TO THE PROJECT.

10. CUTS MADE TO PAVED SURFACES ON PUBLIC PROPERTY WILL BE REPAIRED BY THE CITY'S CONTRACTOR AND CHARGED AGAINST THE OWNER/APPLICANT. UNIT REPAIR PRICES ARE AVAILABLE FROM THE CITY AT 268-4418. A SURCHARGE MAY BE APPLICABLE: CALL 268-4118 FOR DETAILS. REPAIR COSTS TO BE PAID PRIOR TO RELEASE OF THE WATER SERVICE IF WATER SERVICE IS AFFECTED.

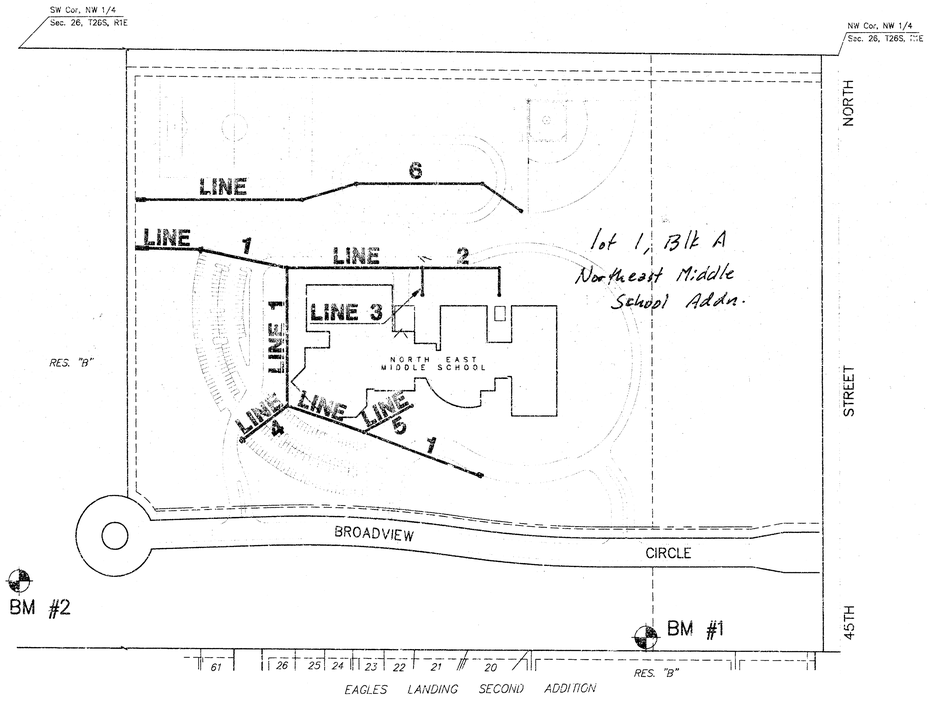

SCALE: 1" = 150'

INDEX TO DRAWINGS

SHEET NO.	DESCRIPTION
1	TITLE SHEET
2-4	STORM SEWER DETAILS
5-10	PLAN & PROFILES

BENCHMARKS

BM#1 TOP OF "T" POST 497.7' S. OF NE COR., W1/2, NE1/4, SEC. 26, TWP. 26-S, R-1-E, AND 23.7' W OF THE EAST LINE OF THE W1/2, NW1/4, SEC. 26, TWP, 26-S, R-1-E ELEV.= 199.03 CITY DATUM (1386.43 NGVD)

BM#2 TOP OF "T" POST 2195.3' S. OF NE COR., W1/2, NE1/4, SEC. 26, TWP. 26-S, R-1-E, AND 40.8' W OF THE EAST LINE OF THE W1/2, NE1/4, SEC. 26, TWP, 26-S, R-1-E ELEV.=208.51 CITY DATUM (1395.91 NGVD)

AARON RANDOLPH LINEBERRY 16079 2-24-03 KANSAS PROFESSIONAL ENGINEER

"AS BUILT" 7-17-02 TB (Ruggles and Bohm)

MKEC ENGINEERING CONSULTANTS
411 N. WEBB ROAD
WICHITA, KS. 67206
316-684-9600

NORTH EAST MIDDLE SCHOOL
PROJECT NAME

STORM SEWER PLANS
SHEET TITLE

ASH	GJR	GJA
DESIGN BY:	DRAWN BY:	CHECKED BY:
FEBRUARY 2002	10132_DT	1 / 10
DATE	DRAWING NAME	SHEET / OF

H:\CIVIL\10132\DWG\SWS\10132_DT.DWG

H:\CIVIL\10132\DWG\SWS\10132_DT.DWG Mon Feb 25 15:09:16 2002

13 3 of 10

SEWER APPURTENANCES DETAILS

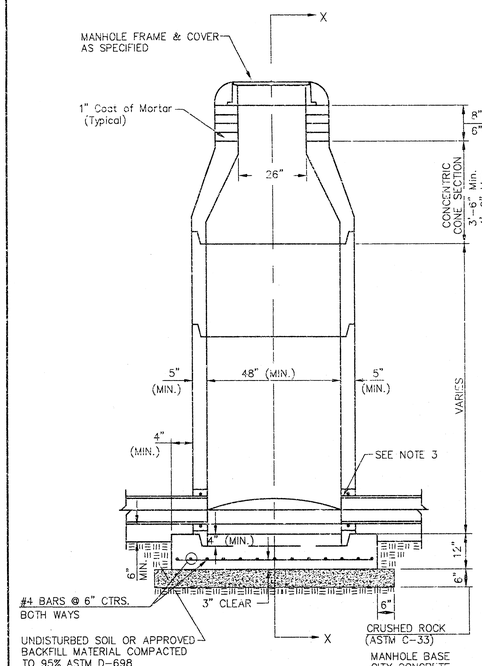

TYPE P
STANDARD MANHOLE

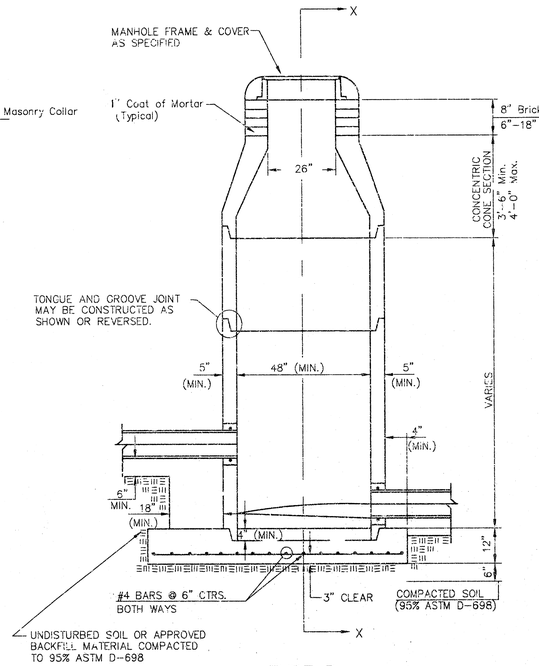

TYPE P
INSIDE DROP MANHOLE

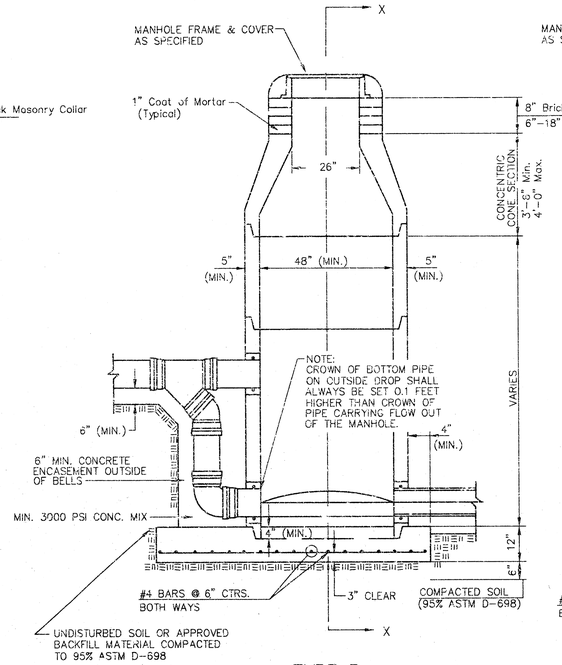

TYPE P
OUTSIDE DROP MANHOLE

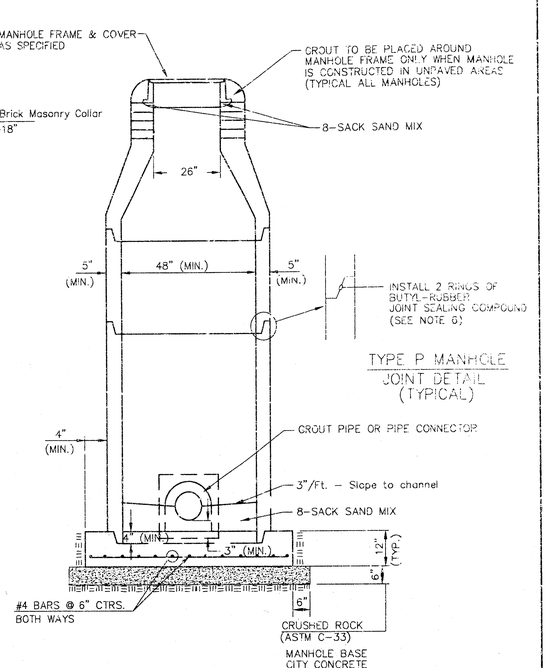

SECTION X
(TYPICAL)

GENERAL NOTES

PRECAST MANHOLE NOTES

1. ALL PRECAST CONCRETE MANHOLE SECTIONS SHALL CONFORM TO THE LATEST REVISIONS OF A.S.T.M. C478 AS MODIFIED BY THE SPECIFICATIONS.
2. NON-SHRINK GROUT SHALL BE NON-METALLIC TYPE.
3. APPROVED FLEXIBLE WATERSTOP GASKETS SHALL BE INSTALLED TO JOIN THE SEWER TO THE MANHOLE WALL WHEN A.B.S. COMPOSITE PIPE OR P.V.C. PIPE IS USED. FOR OTHER TYPES OF PIPE THE SEWER SHALL BE GROUTED IN PLACE WITH NON-SHRINK GROUT. THE SEWER PIPE SHALL BE SUPPORTED WITH CONCRETE ENCASEMENT A MINIMUM OF 3 FEET FROM THE MANHOLE WALL AND TO THE FIRST JOINT FOR V.C.P. SUCH THAT THE JOINT REMAINS FLEXIBLE.
4. ALL INSIDE SURFACES OF THE CONCRETE MANHOLE WHICH WOULD BE EXPOSED TO SEWER GAS SHALL BE COATED WITH 2 COATS TNEMEC SERIES 66 HI-BUILD EPOXOLINE, DRY THICKNESS OF 8 MILS (MIN.)
5. EXTERIOR MANHOLE WALLS SHALL BE COATED WITH 1 COAT MOBILARMA 633 BITUMINOUS COATING.
6. JOINT SEALING COMPOUND SHALL BE KENT SEAL NO. 2 OR APPROVED EQUAL.
7. PRECAST MANHOLES SHALL BE SET AT LEAST 4 INCHES INTO THE MANHOLE BASE.
8. TOP OF MANHOLE FLOOR SLAB SHALL BE AT LEAST 3 INCHES BELOW THE FLOW LINE OF THE OUTLET PIPE TO INSURE SUFFICIENT MINIMUM THICKNESS OF SHAPED INVERT.
9. LIFTING HOLES SHALL BE FILLED WITH NON-SHRINK GROUT AND THE INTERIOR SURFACE COATED AS SPECIFIED.
10. MORTAR USED IN MASONRY CONSTRUCTION SHALL CONTAIN 8 SACKS OF CEMENT PER CUBIC YARD. CONCRETE USED IN MANHOLE BASES SHALL CONFORM TO THE REQUIREMENTS OF CONCRETE FOR CONCRETE PAVEMENT CONSTRUCTION AS SPECIFIED IN THE CITY STANDARD PAVING SPECIFICATIONS USING CITY CONCRETE PAVEMENT MIX WITHOUT AIR ENTRAINING ADMIXTURE. MORTAR SHALL BE PLACED AROUND THE MANHOLE RING AS SHOWN ON THE DRAWINGS WHEN MANHOLES ARE CONSTRUCTED IN UNPAVED AREAS. MANHOLES CONSTRUCTED WHERE PIPE SIZES ARE SMALLER THAN 24" SHALL HAVE AN INSIDE DIAMETER OF 4'. MANHOLES CONSTRUCTED WHERE PIPE SIZES ARE 24" OR LARGER SHALL HAVE AN INSIDE DIAMETER OF 5'. COMPLETED MANHOLE SHALL BE WITHOUT LEAKS AND WATER TIGHT.
11. REINFORCING STEEL SHALL BE INSTALLED IN THE MANHOLE BASES AND SHALL CONSIST OF NO. 4 BARS PLACED ON 6" CENTERS IN BOTH DIRECTIONS. THE MANHOLE BASE REINFORCEMENT SHALL BE PLACED AT LEAST 3" ABOVE THE BOTTOM OF THE MANHOLE BASE. ALL COSTS FOR FURNISHING AND INSTALLING REINFORCING STEEL SHALL BE INCLUDED IN THE UNIT PRICE BID FOR THE MANHOLE.
12. OPENINGS SHALL BE CUT INTO THE MANHOLE WALL WHEN OUTSIDE DROPS ARE CONSTRUCTED ON EXISTING MANHOLES. SUCH OPENINGS CUT INTO EXISTING MANHOLES SHALL BE AS SMALL AS PRACTICAL TO FACILITATE INSTALLING AND GROUTING THE NEW PIPE IN PLACE. WATERSTOP GASKETS SHALL BE USED WITH P.V.C. AND A.B.S. COMPOSITE PIPE. THE NEW PIPE SHALL BE GROUTED INTO THE OPENING USING AN APPROVED NONSHRINK GROUT FOR THE FULL MANHOLE WALL THICKNESS. THE EXTERIOR OF THE COMPLETED CONNECTION SHALL BE SEALED WITH AN APPROVED BITUMINOUS COATING SUCH THAT THE CONNECTION WILL BE WATER TIGHT. FLOOR OF MANHOLE SHALL BE MODIFIED TO FORM NEW FLOW CHANNEL FOR THE NEW CONNECTION AS INDICATED BY THE DRAWING. THIS WORK, INCLUDING MODIFICATION OF MANHOLE FLOOR, SHALL BE PAID FOR AT THE UNIT PRICE BID FOR OUTSIDE DROP STACK CONSTRUCTED ON EXISTING MANHOLE.
13. THE FLOORS OF ALL MANHOLES SHALL BE SHAPED WITH FLOW CHANNELS SUCH THAT THE MANHOLES WILL BE SELF CLEANING AND FREE OF AREAS WHERE SOLIDS COULD BE DEPOSITED AS SEWAGE FLOWS THROUGH THE MANHOLE FROM ALL INLET PIPES TO THE OUTLET PIPE. FLOW CHANNELS SHALL BE FORMED TO MATCH THE BOTTOM HALVES OF THE INFLOWING PIPES AND THE OUTFLOWING PIPE AS SHOWN BY THE DRAWINGS EXCEPT FOR INSIDE DROP MANHOLES. FLOW CHANNELS FOR INSIDE DROP MANHOLES SHALL BE CONSTRUCTED AS INDICATED BY THE DRAWING. MANHOLE FLOORS SHALL HAVE SLOPES OF 3 INCHES PER FOOT IN THE AREAS OUTSIDE OF THE FLOW CHANNELS SLOPED TOWARD THE FLOW CHANNELS. PIPES LAID THROUGH MANHOLES SHALL HAVE THE TOP HALF REMOVED TO NEAT LINES FOR THE FULL INSIDE DIAMETER OF THE MANHOLE. MANHOLE FLOORS SHALL THEN BE SHAPED AROUND THE BOTTOM HALF OF THE PIPE WHICH FORMS THE FLOW CHANNEL.
14. PIPES INSTALLED WITHIN THE EXCAVATION MADE FOR THE MANHOLE SHALL BE CRADLED WITH CONCRETE TO THE LIMITS OF THE MANHOLE EXCAVATION. WHEN CLAY PIPE IS USED, THE CRADLE SHALL EXTEND TO THE FIRST JOINT OUTSIDE THE MAHOLE. THE CRADLE SHALL BE TERMINATED AT THE CLAY PIPE JOINT IN A MANNER WHICH WILL MAINTAIN THE FLEXIBILITY OF THE JOINT. COST OF CRADLE WITHIN MANHOLE EXCAVATION OR TO CLAY PIPE JOINTS ADJACENT TO MANHOLE SHALL BE INCLUDED IN THE UNIT PRICE BID FOR THE MANHOLE.
15. MANHOLE COVER CASTINGS AND MANHOLE FRAME CASTINGS SHALL CONFORM TO THE REQUIREMENTS AS INDICATED IN THE STANDARD SPECIFICATIONS AND AS SHOWN IN THE STANDARD DETAIL DRAWING.
16. THE VERTICAL DROP IN INSIDE DROP MANHOLES SHALL NOT EXCEED 2' FOR INFLOWING PIPES SIZED 12" OR SMALLER AND 2' FOR INFLOWING PIPES LARGER THAN 12". THE CROWNS OF INFLOWING PIPES SHALL NEVER BE SET LOWER THAN THE CROWN OF THE OUTFLOWING PIPE.
17. STANDARD MANHOLES AND STANDARD INSIDE DROP MANHOLES SHALL BE BID AS STANDARD MANHOLES FOR THE TYPE AND DIAMETER INDICATED. OUTSIDE DROP MANHOLES SHALL BE BID AS STANDARD OUTSIDE DROP MANHOLES FOR THE TYPE AND DIAMETER INDICATED. ALL MANHOLE DIAMETERS WILL BE 4' UNLESS INDICATED OTHERWISE.
18. A BRICK MASONRY COLLAR SHALL BE INSTALLED BETWEEN THE CAST IRON FRAME AND THE CONCENTRIC CONE. THE COLLAR WILL HAVE 8" WALLS AND A VERTICAL HEIGHT OF 6" MINIMUM AND 18" MAXIMUM. A 1" COAT OF MORTAR WILL BE PLASTERED ON THE OUTSIDE OF THE COLLAR. THE USE OF PRE-CAST CONCRETE SPACERS FOR MANHOLE TOP ADJUSTMENT IS ALSO ALLOWED.
19. CRUSHED ROCK CONFORMING TO ASTM C-33 WITH A GRADATION OF NO. 67 SHALL BE INSTALLED AT THE BASE OF THE MANHOLE TO A DEPTH OF NO LESS THAN 6", AND SHALL EXTEND NO LESS THAN 6" OUTSIDE THE DIAMETER OF THE CONCRETE FLOOR OF THE MANHOLE.
20. WALL THICKNESS SHALL BE 1" GREATER THAN MANHOLE DIAMETER IN FEET.
21. THE FULL DIAMETER OF THE MANHOLE SHALL EXTEND THE ENTIRE DEPTH OF THE MANHOLE TO THE CONE SECTION. NO REDUCTION IN MANHOLE DIAMETER WILL BE ALLOWED.

REV. 1/05/01, MCG

THE CITY OF WICHITA

CITY ENGINEER'S OFFICE
CITY HALL - SEVENTH FLOOR
455 NORTH MAIN STREET
WICHITA, KANSAS 67202
(316) 268-4501
(316) 268-4114 FAX

STANDARD TYPE 'P' MANHOLES

M. E. LINDEBAK P.E. - CITY ENGINEER

PROJECT NUMBER	INDEX CODE
XXX-XXXXX	XXXXXX
DATE: XXXXX	SHEET 2 OF 10

H:\CITYTL\01032DWG\SWS\01032D01.DWG Mon Feb 25 15:07:26 2002

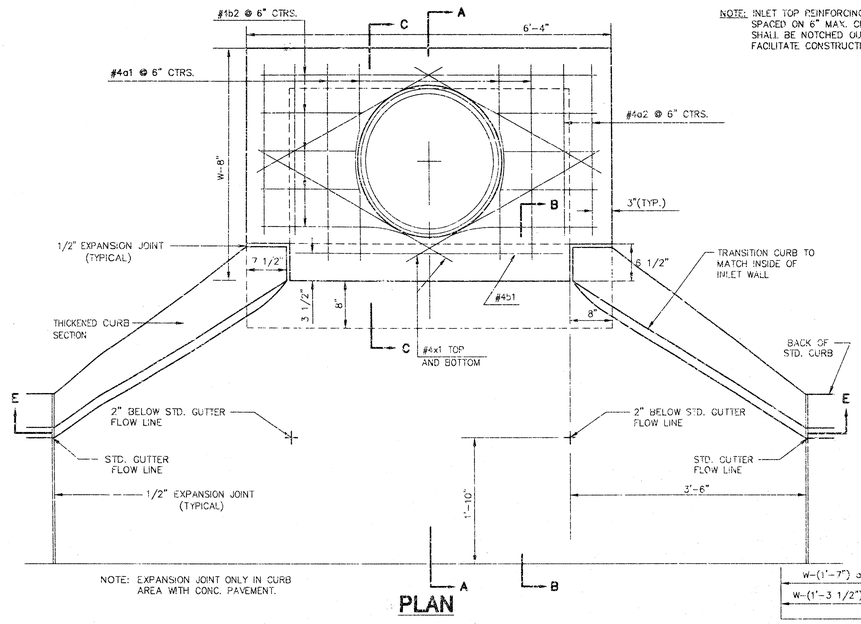

PLAN

NOTE: INLET TOP REINFORCING SHALL BE SPACED ON 6" MAX. CENTERS. INLET LIDS SHALL BE NOTCHED OUT AS INDICATED TO FACILITATE CONSTRUCTION OF CURB.

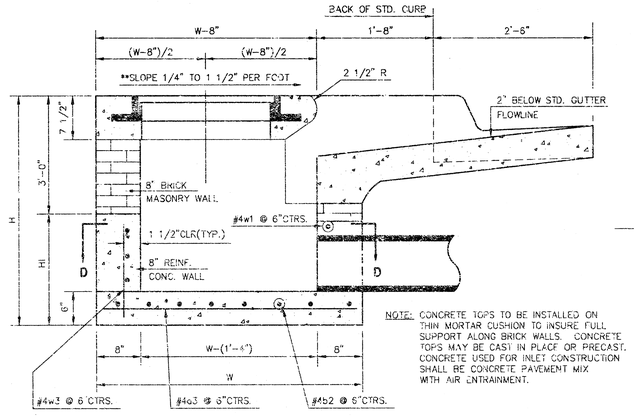

SECTION A-A

NOTE: CONCRETE TOPS TO BE INSTALLED ON THIN MORTAR CUSHION TO INSURE FULL SUPPORT ALONG BRICK WALLS. CONCRETE TOPS MAY BE CAST IN PLACE OR PRECAST. CONCRETE USED FOR INLET CONSTRUCTION SHALL BE CONCRETE PAVEMENT MIX WITH AIR ENTRAINMENT.

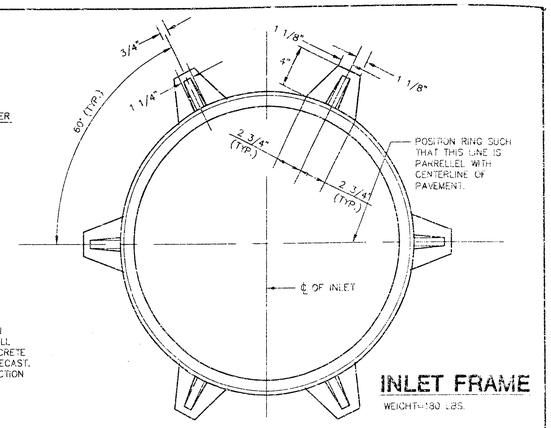

INLET FRAME

WEIGHT=180 LBS.

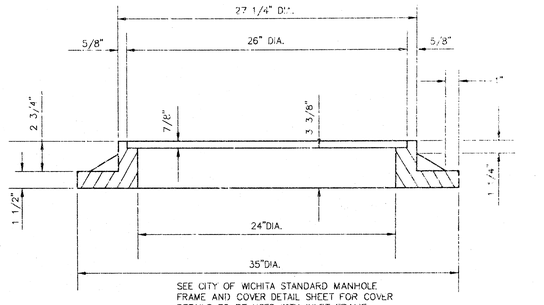

SEE CITY OF WICHITA STANDARD MANHOLE FRAME AND COVER DETAIL SHEET FOR COVER DETAILS TO BE USED WITH INLET FRAME.

BENDING DIAGRAM

PRECAST SLAB AND FLOOR REINFORCING

		W=4'-4"		W=5'-4"		W=6'-4"		W=7'-4"		W=8'-4"	
MARK	SIZE	NO.	LENGTH	NO.	LENGTH	NO.	LENGTH	NO.	LENGTH	NO.	LENGTH
*a1	#4	6	6'-7"	6	8'-7"	6	10'-7"	6	12'-7"	6	14'-7"
a2	#4	4	6'-0"	4	8'-0"	4	10'-0"	4	12'-0"	4	14'-0"
a3	#4	13	4'-1"	13	5'-1"	13	5'-1"	13	7'-1"	13	8'-1"
b1	#4	1	4'-9"	1	4'-9"	1	4'-9"	1	4'-9"	1	4'-9"
*b2	#4	23	6'-1"	29	6'-1"	35	6'-1"	41	6'-1"	47	6'-1"
x1	#4	8	3'-10"	8	4'-2"	8	4'-6"	8	4'-10"	8	5'-2"

WALL REINFORCING

		W=4'-4"		W=5'-4"		W=6'-4"		W=7'-4"		W=8'-4"	
MARK	SIZE	NO.	LENGTH	NO.	LENGTH	NO.	LENGTH	NO.	LENGTH	NO.	LENGTH
w1	#4	①	6'-1"	①	6'-1"	①	6'-1"	①	6'-1"	①	6'-1"
w2	#4	①	4'-1"	①	5'-1"	①	6'-1"	①	7'-1"	①	8'-1"
w3	#4	32	②	36	②	40	②	44	②	48	②

* FIELD BEND OR CUT REINFORCING AS REQUIRED FOR CLEARANCE
① 4(HI-12"); (HI-12") ROUND DOWN TO NEAREST 0.5'
② HI-3"

STANDARD CURB INLET PRECAST TOPS			
W	PRE-CAST TOP SIZE	PIPE SIZE	CU. YD. CONC.
4'-4"	3'-5"x6'-4"x7 1/2"	21" & SMALLER	0.38±
5'-4"	4'-8"x6'-4"x7 1/2"	24" & 30"	.51±
6'-4"	5'-8"x6'-4"x7 1/2"	36" & 42"	.64±
7'-4"	6'-8"x6'-4"x7 1/2"	48" & 54"	.77±
8'-4"	7'-8"x6'-4"x7 1/2"	60" & 66"	.90±

**NOTE: SLOPE OF INLET TOPS TO MATCH SIDEWALK OR PARKING SLOPES WITHIN LIMITS INDICATED.

NOTE: CONTRACTOR SHALL HAVE THE OPTION OF CONSTRUCTING 8" BRICK MASONRY WALLS BETWEEN THE CONCRETE INLET BASE AND TOP ON THIS INLET WHEN W=6'-4" AND H=7'-0" OR LESS.

ADDITIONAL CURB AND GUTTER CONSTRUCTION NECESSARY TO CONNECT SET-BACK INLET TO PAVEMENT WILL BE PAID FOR AT THE UNIT PRICE BID FOR EACH INLET HOOKUP.

INLET INVERT SHALL BE SHAPED WITH 8 SACK SAND MIX CONCRETE TO CREATE FLOW CHANNELS AND TO INCREASE HYDRAULIC EFFICIENCY SUCH THAT THE INLET WILL BE SELF CLEANING BETWEEN ALL INLET AND/OR OUTLET PIPES.

THE ENDS OF ALL PIPES INSTALLED IN INLETS SHALL BE CUT OFF FLUSH WITH THE INSIDE FACE OF THE INLET WALL.

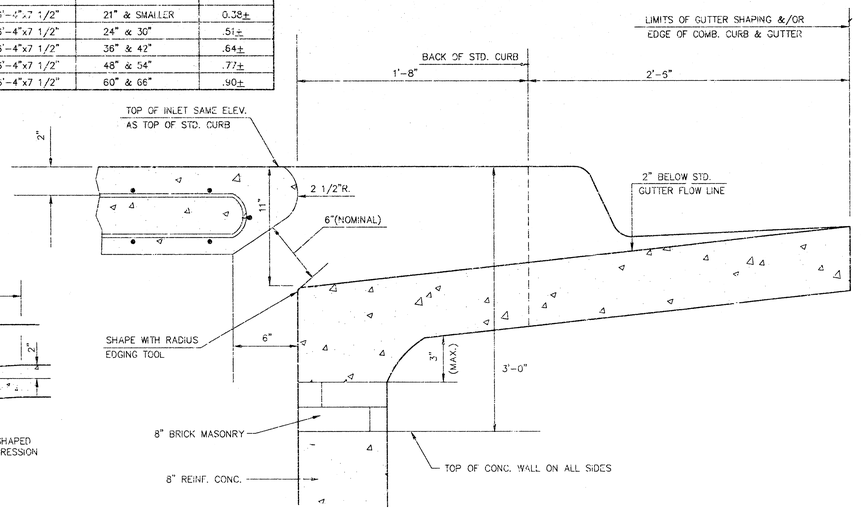

SECTION B-B

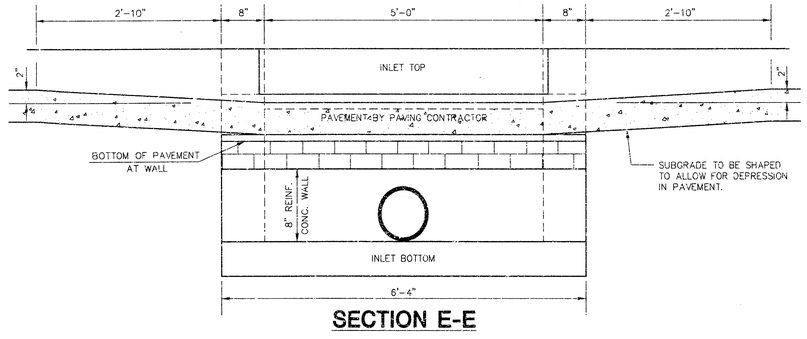

SECTION E-E

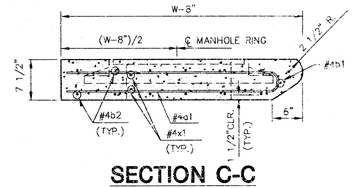

SECTION C-C

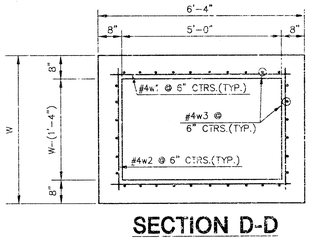

SECTION D-D

REVISED: 2-16-89 C.O.W.

STANDARD TYPE 1A CURB INLET

INLET OPENING=6"x5'-0"

JUNE 1984

CITY OF WICHITA, KANSAS

Design C.O.W.	Checked by	Checked by		3/10
Drawn by	Date	Date x	Job No. x	

H:\CITY\L\01\03\DWG\SWS\01\032002.DWG Mon Feb 25 15:13:15 2002

H:\CVL\01\032\DWG\SWS\01\032002.dwg

NOTE: GRATES SHALL BE IMPRINTED ON THE TOP SURFACE WITH "CITY OF WICHITA" USING LETTERS AT LEAST 1" IN HEIGHT. OTHER MARKING METHODS MAY BE USED ONLY IF APPROVED BY THE ENGINEER.

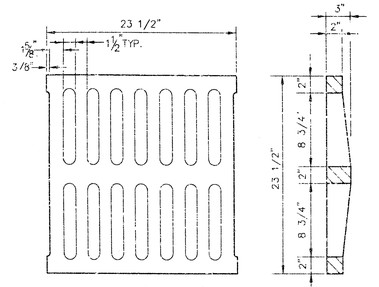

24"x24" GRATE DETAIL

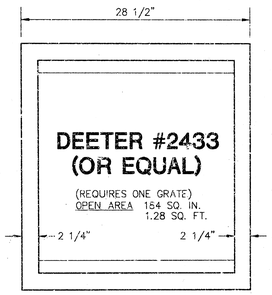

SINGLE 24"x24" FRAME DETAIL

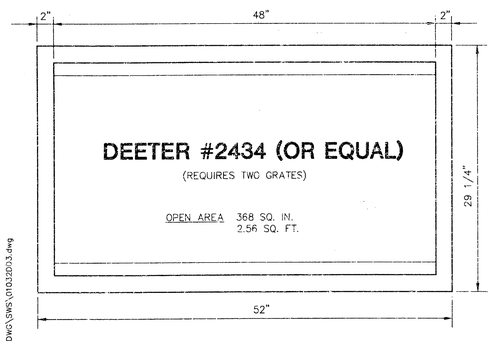

DOUBLE 24"x24" FRAME DETAIL

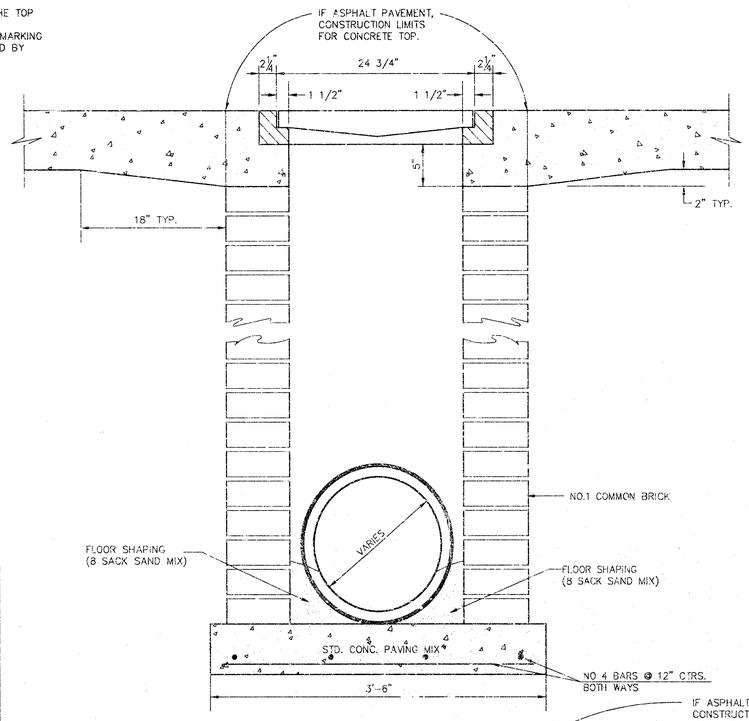

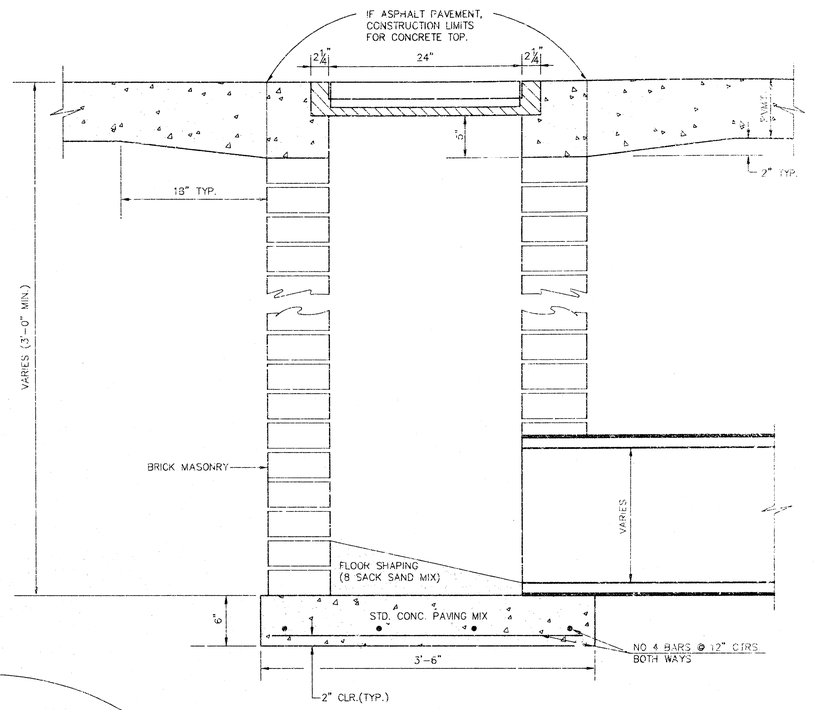

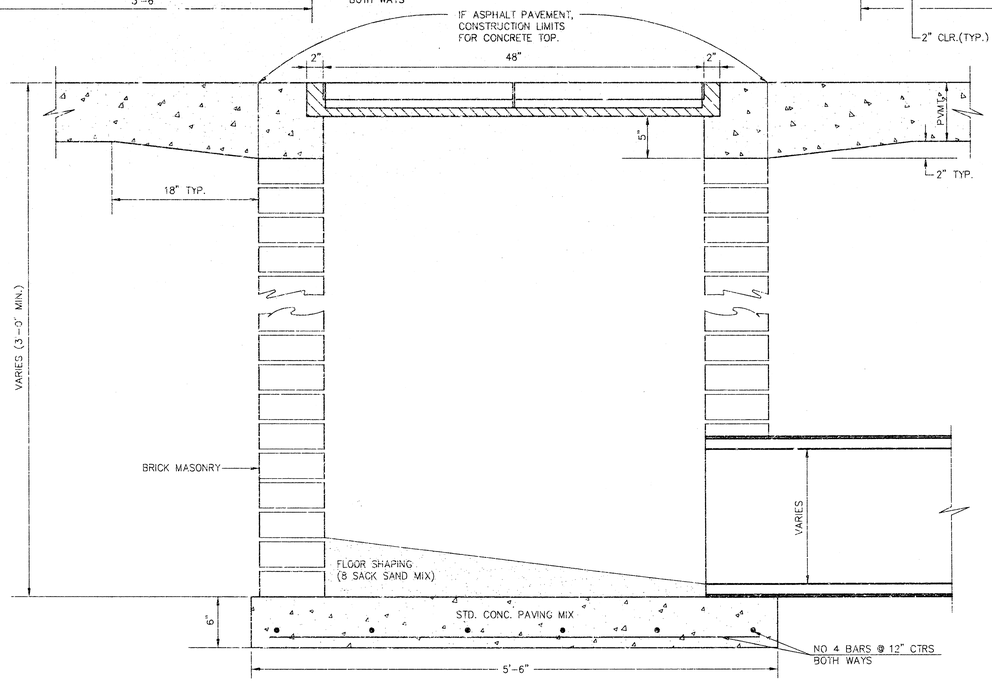

ORIFICE EQUATION		
$Q=C^*A^*\sqrt{2gh}$ C=0.60		
h (DEPTH)	#2433 (SINGLE)	#2434 (DOUBLE)
0.1	1.95 cfs	3.89 cfs
0.2	2.75 cfs	5.50 cfs
0.3	3.37 cfs	6.74 cfs
0.4	3.89 cfs	7.78 cfs
0.5	4.35 cfs	8.70 cfs
0.6	4.77 cfs	9.53 cfs
0.7	5.15 cfs	10.30 cfs
0.8	5.50 cfs	11.01 cfs
0.9	5.84 cfs	11.67 cfs
1.0	6.15 cfs	12.30 cfs

REVISED: 5-8-90 JNJ

DROP INLET DETAILS

CITY OF WICHITA, KANSAS

Design C.O.W.	Checked by	Checked by	SHEET 4 OF 10
Drawn by	Date	Date	Job No

H:\CIVIL\01032\DWG\SWS\01032D03.dwg Mon Feb 25 15:15:14 2002

NORTHEAST MIDDLE SCHOOL
STORM SEWER
LINE 1

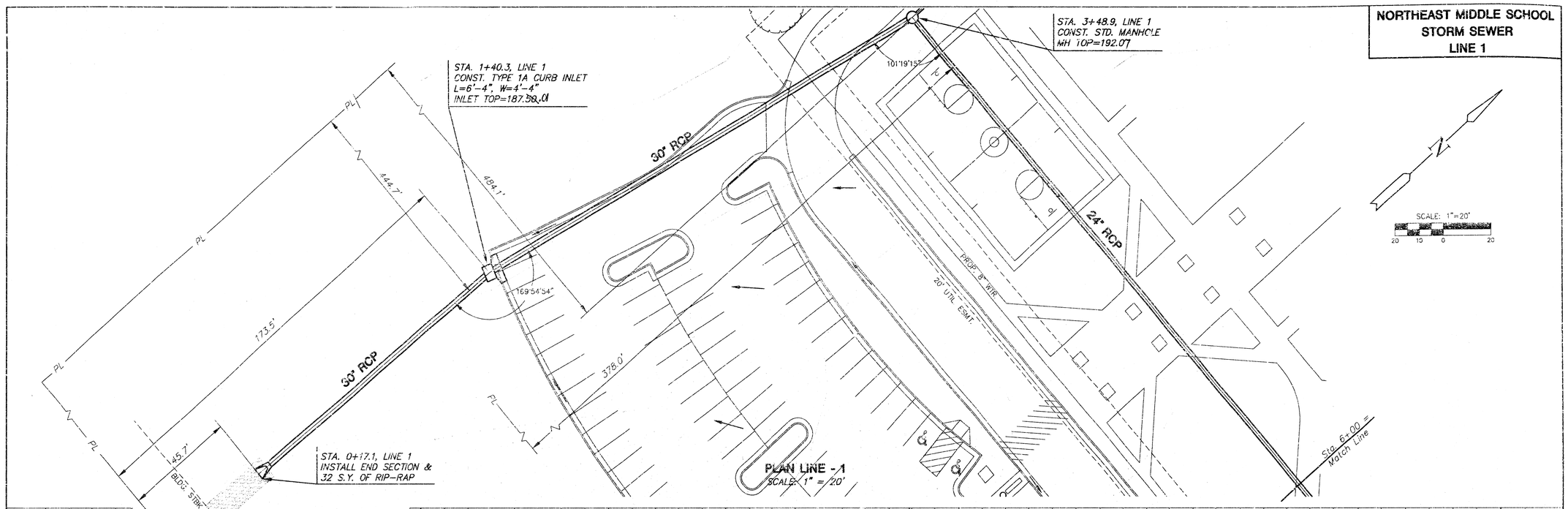

PROFILE LINE - 1

HORIZONTAL SCALE: 1" = 20'
VERTICAL SCALE: 1" = 5'

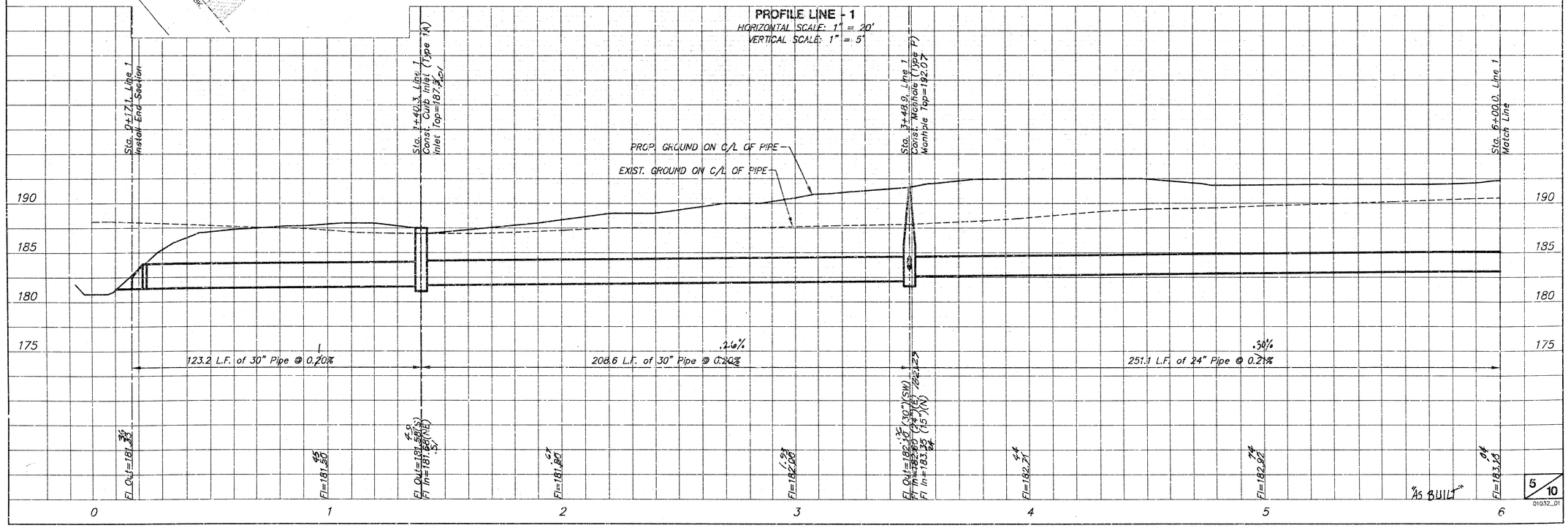

5/10
01032_01

H:\CIVIL\01032\DWG\SHT\01032_21.DWG Mon Feb 25 15:27:25 2002

NORTHEAST MIDDLE SCHOOL
STORM SEWER
LINE 1

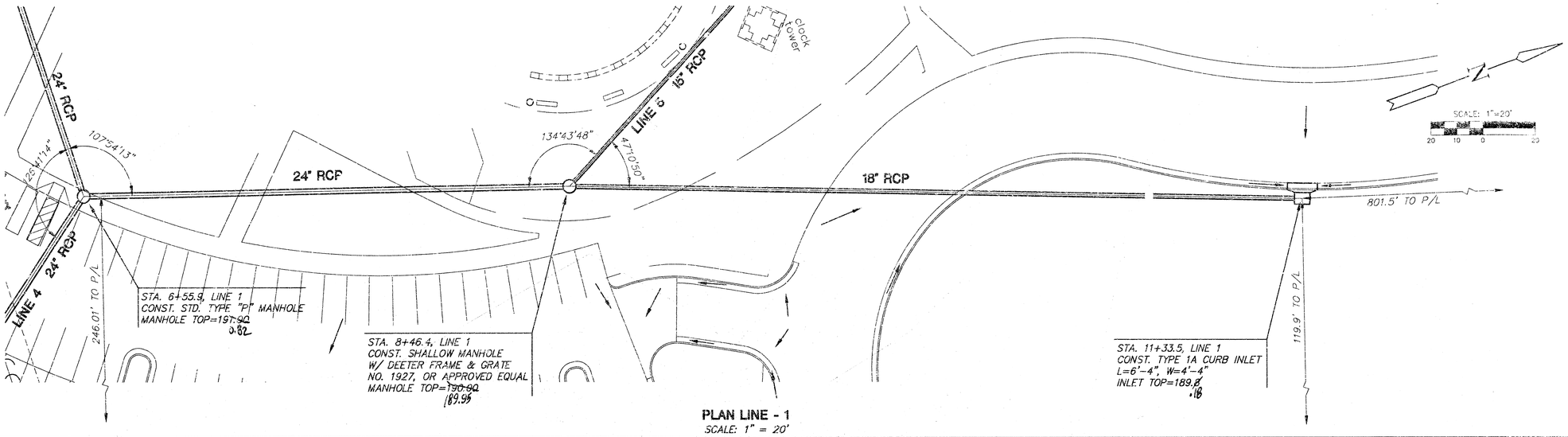

PLAN LINE - 1
SCALE: 1" = 20'

PROFILE LINE - 1
HORIZONTAL SCALE: 1" = 20'
VERTICAL SCALE: 1" = 5'

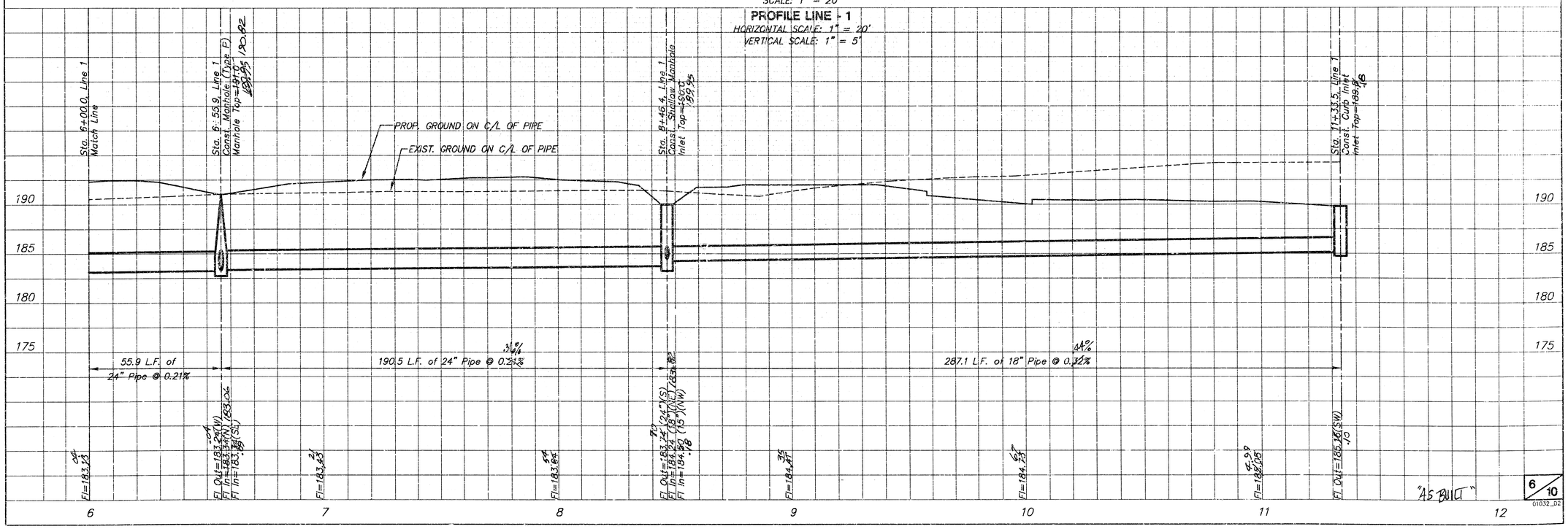

H:\CIVIL\01032\DWG\SWC\01032_D2.DWG Mon Feb 25 15:26:48 2002

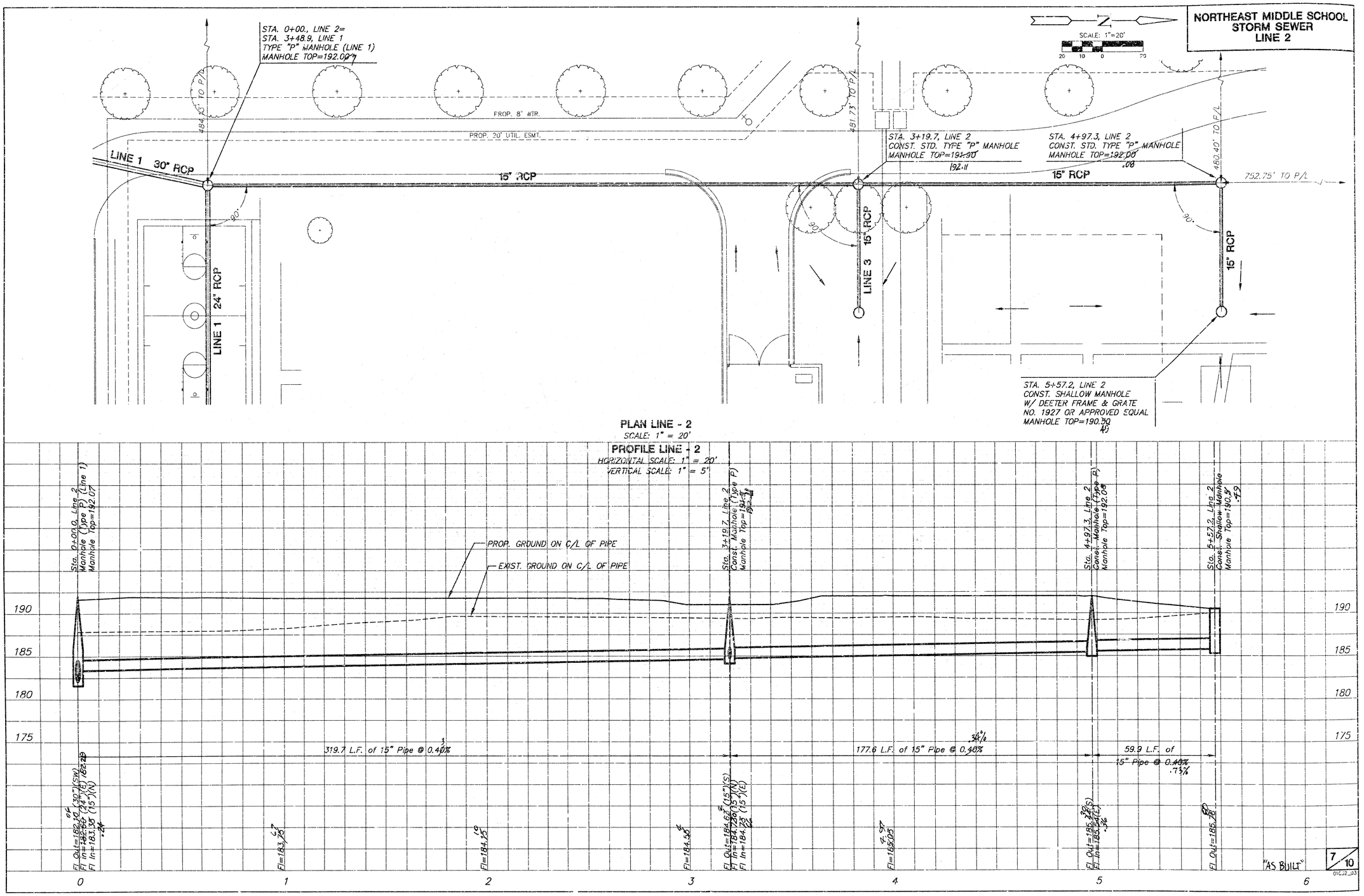
NORTHEAST MIDDLE SCHOOL
STORM SEWER
LINE 2
SCALE: 1"=20'
STA. 0+00., LINE 2=
STA. 3+48.9, LINE 1
TYPE "P" MANHOLE (LINE 1)
MANHOLE TOP=192.07
PROP. 8" WTR.
PROP. 20' UTIL. ESMT.
LINE 1 30" RCP
15" RCP
LINE 1 24" RCP
LINE 3 15" RCP
STA. 3+19.7, LINE 2
CONST. STD. TYPE "P" MANHOLE
MANHOLE TOP=191.90
STA. 4+97.3, LINE 2
CONST. STD. TYPE "P" MANHOLE
MANHOLE TOP=192.00
15" RCP
752.75' TO P/L
STA. 5+57.2, LINE 2
CONST. SHALLOW MANHOLE
W/ DEETER FRAME & GRATE
NO. 1927 OR APPROVED EQUAL
MANHOLE TOP=190.30
PLAN LINE - 2
SCALE: 1" = 20'
PROFILE LINE - 2
HORIZONTAL SCALE: 1" = 20'
VERTICAL SCALE: 1" = 5'
PROP. GROUND ON C/L OF PIPE
EXIST. GROUND ON C/L OF PIPE
Sta. 0+00.0, Line 2
Manhole (Type P) (Line 1)
Manhole Top=192.07
Sta. 3+19.7, Line 2
Const. Manhole (Type P)
Sta. 4+97.3, Line 2
Const. Manhole (Type P)
Manhole Top=192.08
Sta. 5+57.2, Line 2
Const. Shallow Manhole
Manhole Top=190.5
190
185
180
175
319.7 L.F. of 15" Pipe @ 0.40%
177.6 L.F. of 15" Pipe @ 0.40%
59.9 L.F. of
15" Pipe @ 0.40%
"AS BUILT"
7/10
0
1
2
3
4
5
6

NORTHEAST MIDDLE SCHOOL
STORM SEWER
LINES 3, 4, & 5

SCALE: 1"=20'
20 10 0 20

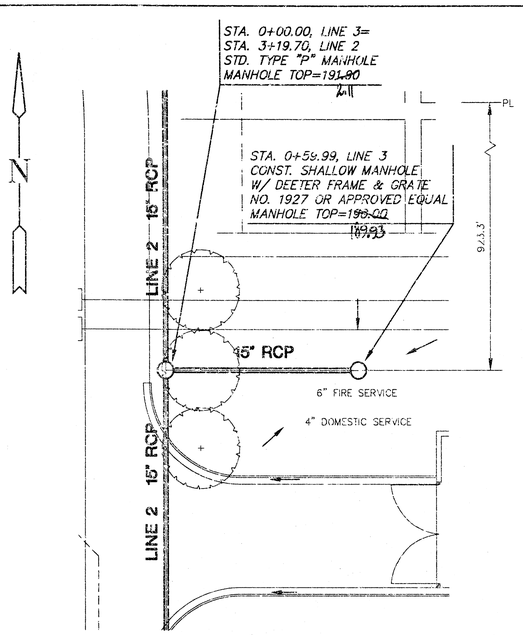

PLAN LINE - 3
SCALE: 1" = 20'

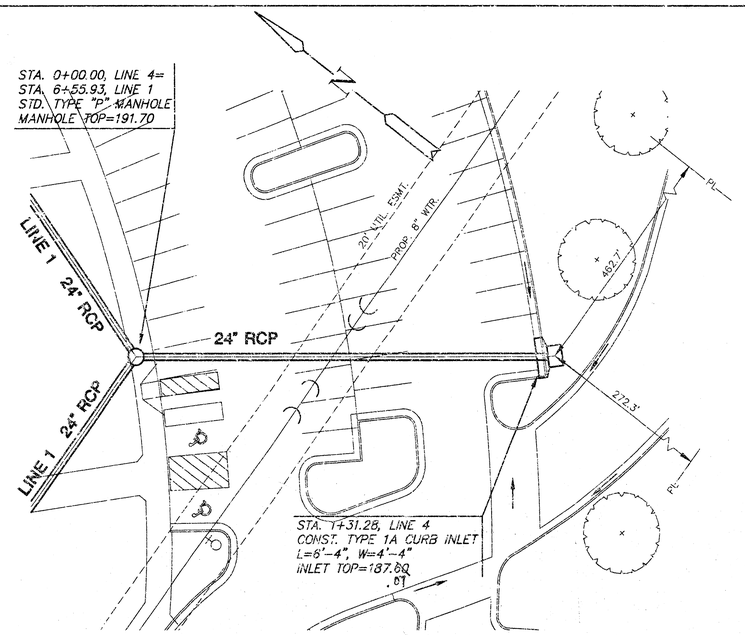

PLAN LINE - 4
SCALE: 1" = 20'

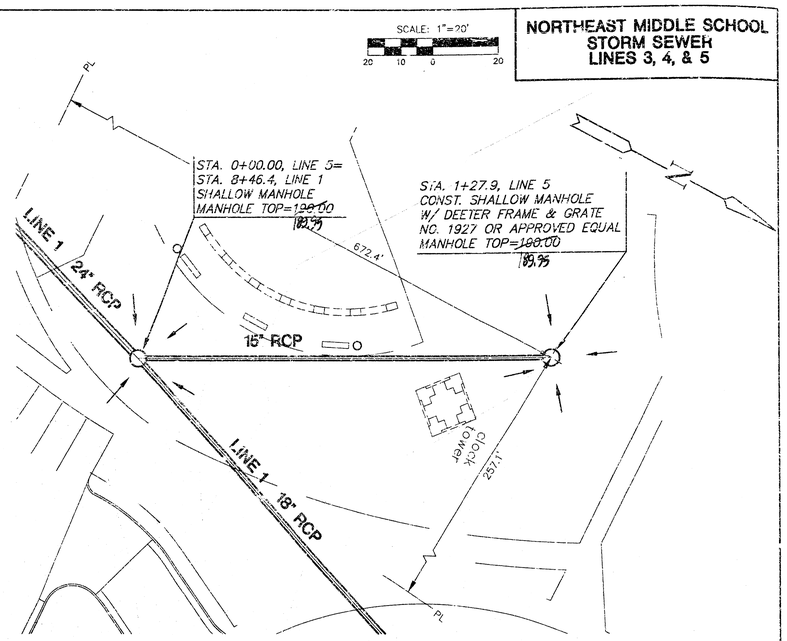

PLAN LINE - 5
SCALE: 1" = 20'

PROFILE LINE - 3
HORIZONTAL SCALE: 1"=20'
VERTICAL SCALE: 1"=5'

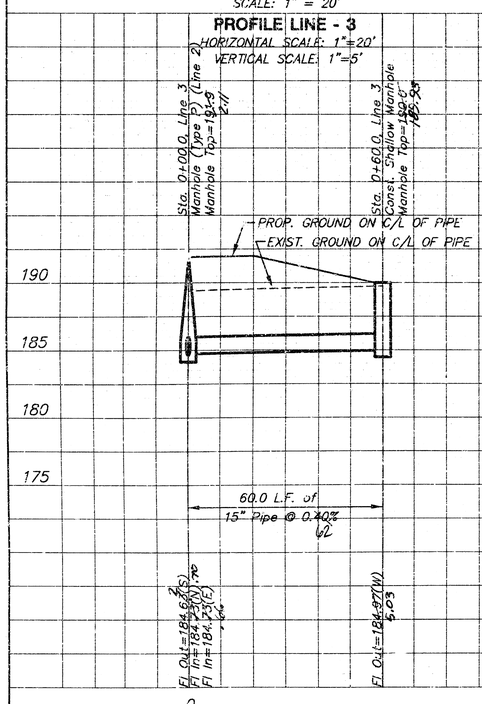

PROFILE LINE - 4
HORIZONTAL SCALE: 1"=20'
VERTICAL SCALE: 1"=5'

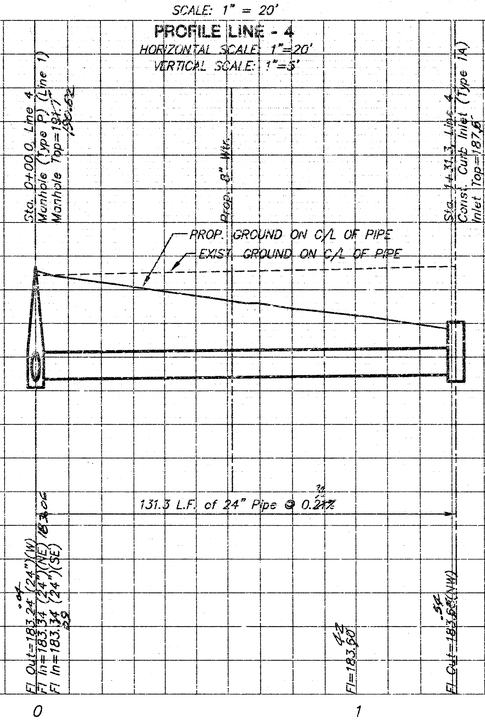

PROFILE LINE - 5
HORIZONTAL SCALE: 1"=20'
VERTICAL SCALE: 1"=5'

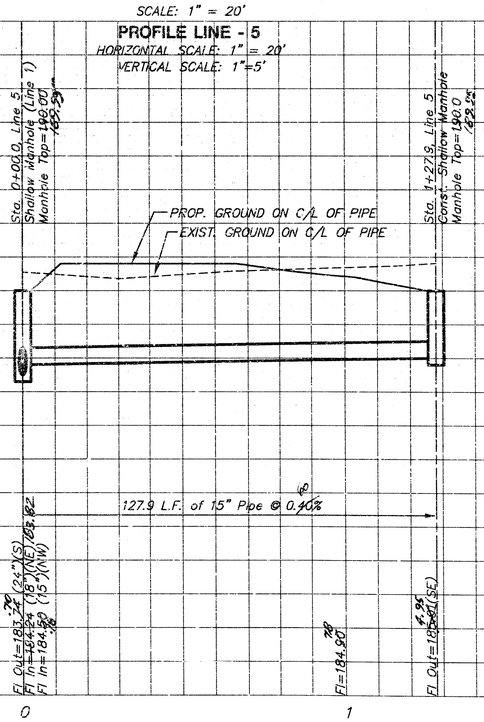

"AS BUILT"

H:\CIVIL\01032\DWGS\01032_04.DWG Mon Feb 25 15:30:39 2002

NORTHEAST MIDDLE SCHOOL STORM SEWER LINE 6

SCALE: 1"=20'

20 10 0 20

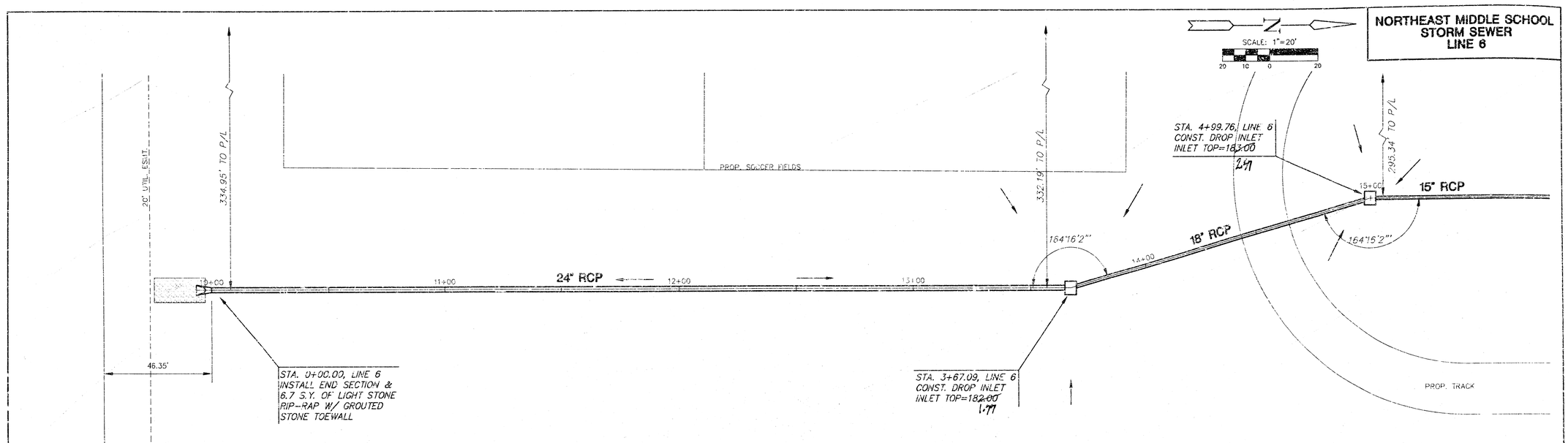

PLAN LINE - 6

SCALE: 1" = 20'

PROFILE LINE - 6

HORIZONTAL SCALE: 1" = 20'
VERTICAL SCALE: 1" = 5'

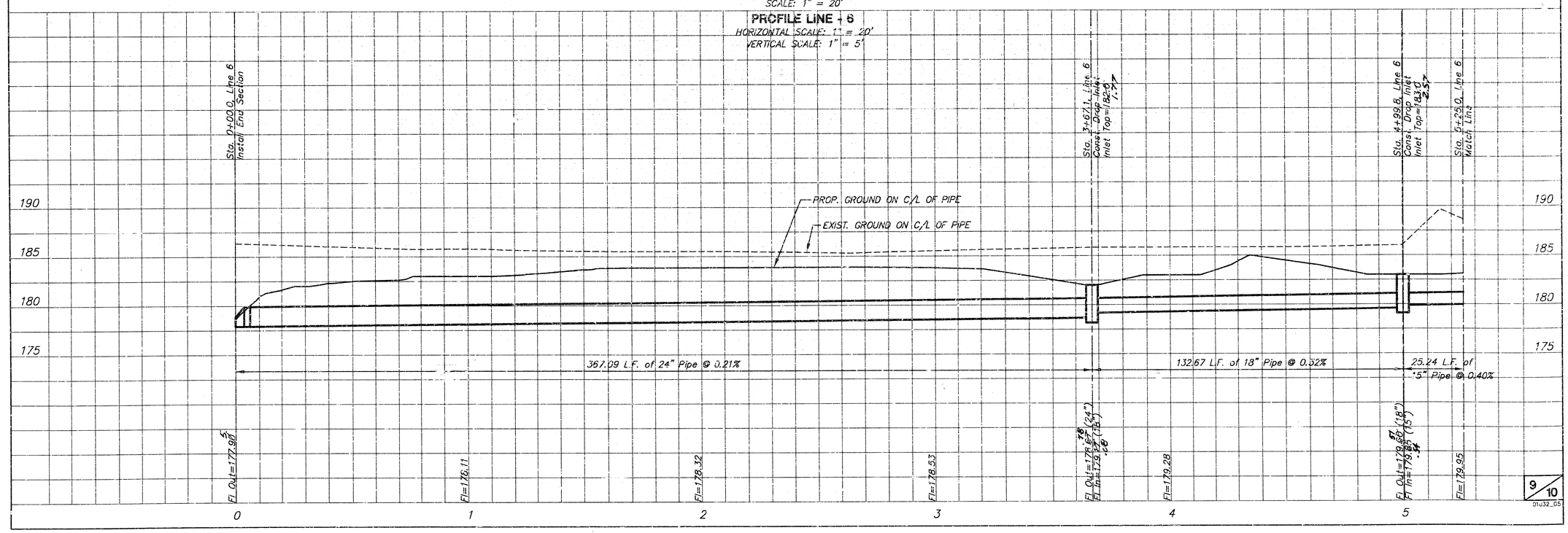

9/10

01032_05

H:\CIVIL\01032\DWGS\DWGS\01032_05.DWG Mon Feb 25 15:32:59 2002

NORTHEAST MIDDLE SCHOOL
STORM SEWER
LINE 6

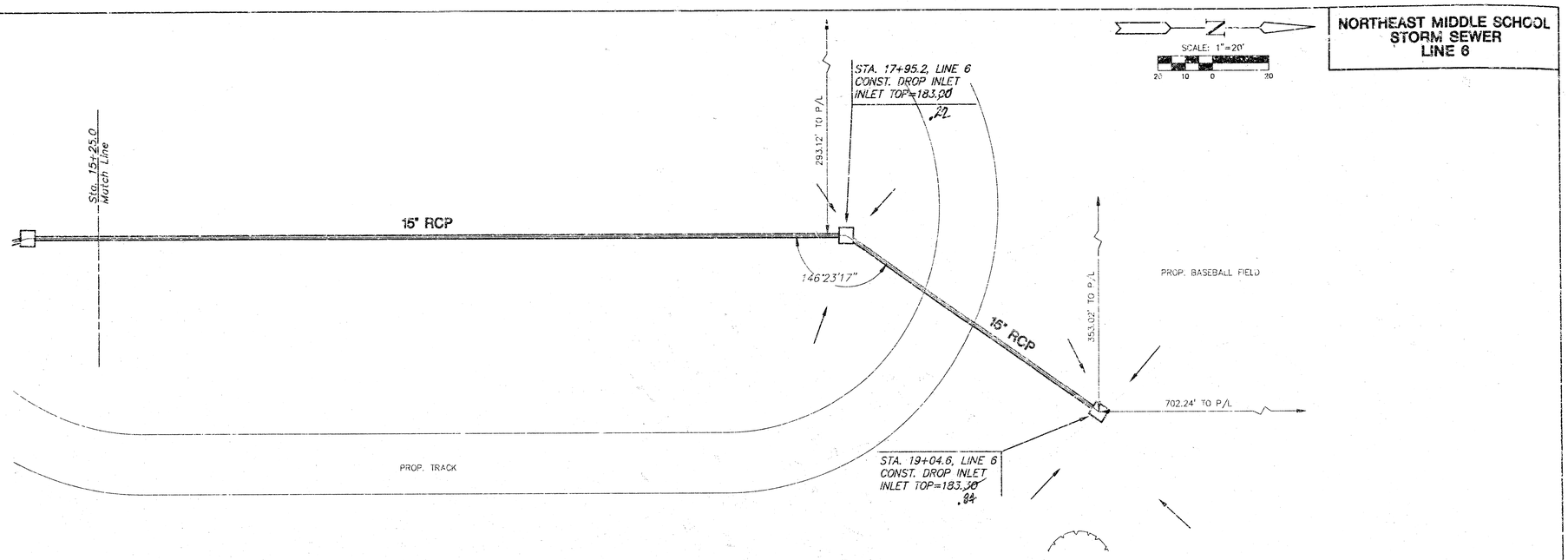

PLAN LINE - 6

SCALE: 1" = 20'

PROFILE LINE - 6

HORIZONTAL SCALE: 1" = 20'
VERTICAL SCALE: 1" = 5'

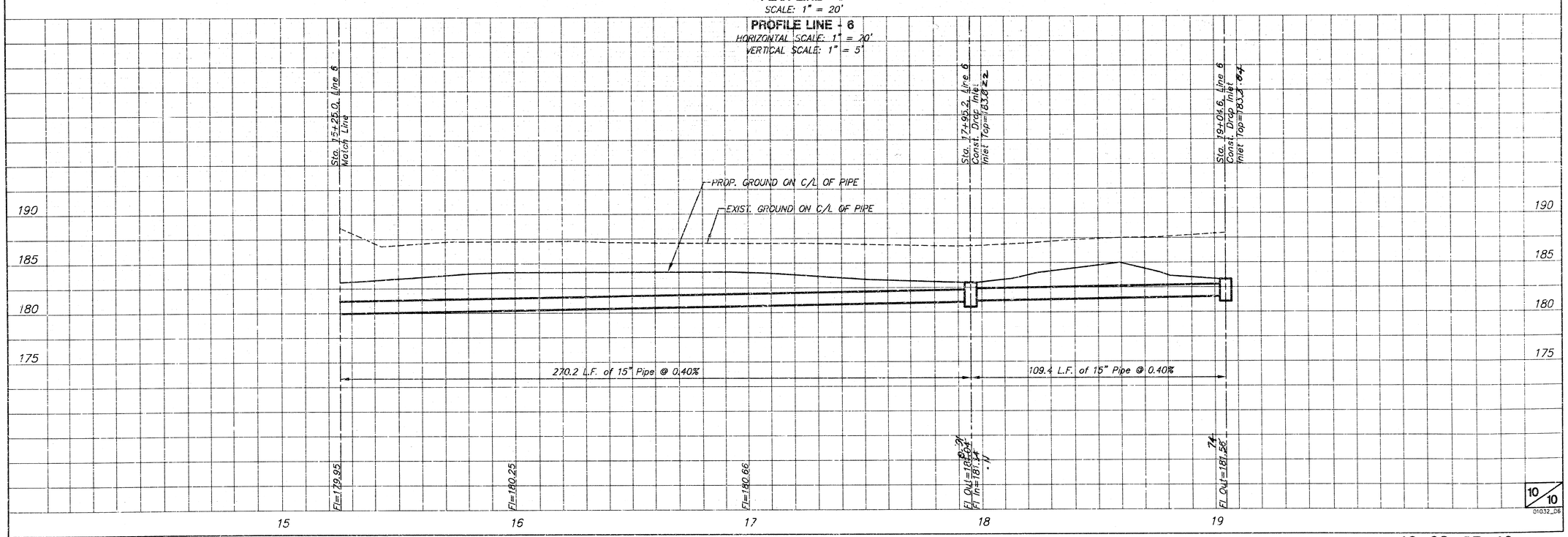

P:\CIVIL\01032\DWG\SHEET\01032_D6.DWG Mon Feb 25 15:33:56 2002