STORM WATER SEWER TO SERVE

C.C.R. 3RD ADDITION

BLOCK 1, PART OF LOT 3

Private Project #1251 PPS (607861)

CITY OF WICHITA, KANSAS

Michael E. Lindebak, P.E. City Engineer

June, 2002

Index

Cover/Plan/Profile Sheet	1
Inlet & Sediment Barrier Detail Sheet	2
Manhole Detail Sheet	3
Ring & Cover Detail Sheet	4
BMP Erosion Detail	5
Copy Of Plat	6

Legal Description:

Part of Lot 3, Block 1, CCR 3rd Addition, Wichita, Sedgwick County, Kansas described as follows; Beginning at the Northeast corner of said Lot 3, thence South along the east line of said Lot 3, to the Southeast corner of said Lot 3; thence West along the south line of said Lot 3, 195.80 feet; thence North parallel with the east line of said Lot 3, 276.22 feet; thence West parallel with the north line of said Lot 3, 58.00 feet; thence North parallel with the east line of said Lot 3, 113.00 feet, to a point on the north line of said Lot 3; thence East along the north line of said Lot 3, 253.80 feet to the Point of Beginning.

Bench Marks:

1. "B" Chiseled on back of curb 279.5 feet south and 23.4 feet east of the northeast corner of Lot 3, Block 1, CCR 3rd Addition, Wichita, Sedgwick County, Kansas.

   Elev.= 202.64 City Datum

2. Rock Road & 13th Street North
   COW Bench Mark. Northeast corner of intersection on traffic signal light pole.

   Elev.= 187.27 City Datum

APPROVED AS NOTED
BY CITY ENGINEER OF WICHITA

Storm Sewers VRH 6/5/02

NOTE TO CONTRACTORS

Installation, inspection and testing for this project is to be provided by a Licensed Consulting Engineering Firm under contract with the Owner/Developer. Said inspection to be in accordance with the City of Wichita standard construction engineering practices and certified by a Licensed Professional Engineer. No work shall be performed in dedicated easements or public right-of-way by the Contractor without such inspection nor shall any work be commenced without written authorization by the City Engineer. All Construction and Materials shall comply with the City of Wichita Specifications and Standards (on file and available in the City Engineer's Office).

Location Map

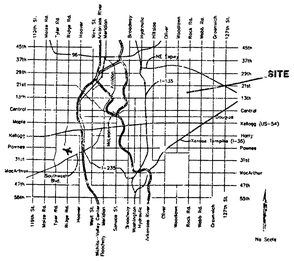

General Notes

1. Contractor will be required to provide notice to utility companies a minimum of forty-eight (48) hours prior to any excavation, as follows:

   Kansas One-Call 687-2470

   The Contractor must notify the following in case of an emergency.

Cox Communications	262-4270
Kansas Gas Service Company	1-888-482-4950
Westar Energy (Electric)	383-8650
Aquila Energy (Gas)	1-800-303-0357
Southwestern Bell Telephone Company	1-800-286-8313
City of Wichita Water Department	268-4908
City of Wichita Sewer Maint. (San. Sewer)	268-4024
City of Wichita Storm Sewer Maint.	268-4090
City of Wichita Traffic Maint.	268-4034

2. Utility service lines, poles, valve boxes, meters, et cetera are to be adjusted as necessary by others prior to construction unless the plans specifically call for their adjustment by the Contractor or unless the plans specifically identify a utility to be adjusted by its owner during construction. Existing utilities and their location, as shown on the plans represent the best information obtainable for design and shall be field verified. The contractor will be required to work around existing utilities within the right-of-way which do not conflict with proposed construction.

3. Contractor shall not start work on the project until the project inspector is assigned to the project and is present on the site. Contractor shall not start on the project until all necessary bonds and permits have been obtained. Any work done without inspection will be required to be uncovered for inspection.

4. Rubble from the removal of miscellaneous structures and excess excavation which is to be wasted shall be disposed of on sites to be provided by the Contractor. These sites shall be approved by the Engineer as to suitability, appearance and site location. Locations that, in the opinion of the Engineer, will leave an unsightly appearance will not be approved. All disposal sites must be approved by the Kansas Department of Health and Environment. Material either stockpiled or disposed of in a flood plain would require a Kansas State Board of Agriculture permit. Any material dumped in waters of the United States or wetlands is subject to U.S. Corps. of Engineers permitting regulations. Any material buried or stockpiled beyond approved construction limits would require additional archaeological investigations unless buried in a previously approved borrow location.

5. All storm sewers shall be installed in accordance with the most recent edition of City of Wichita, Kansas Standard Specifications for the Construction of City Projects.

6. All R/W areas disturbed by construction operations shall be seeded with K-31 Fescue at a rate of 8 lbs. per 1000 sq. feet or as per city specs. Contractor to prepare ground to city specifications.

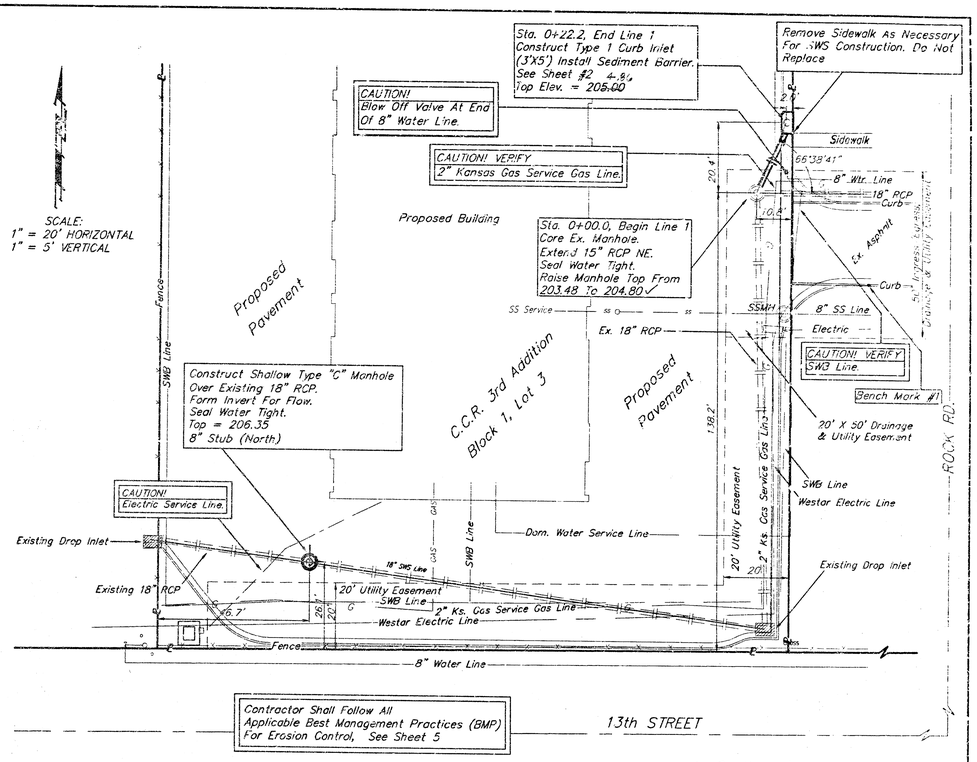

As Built 9/02 KW

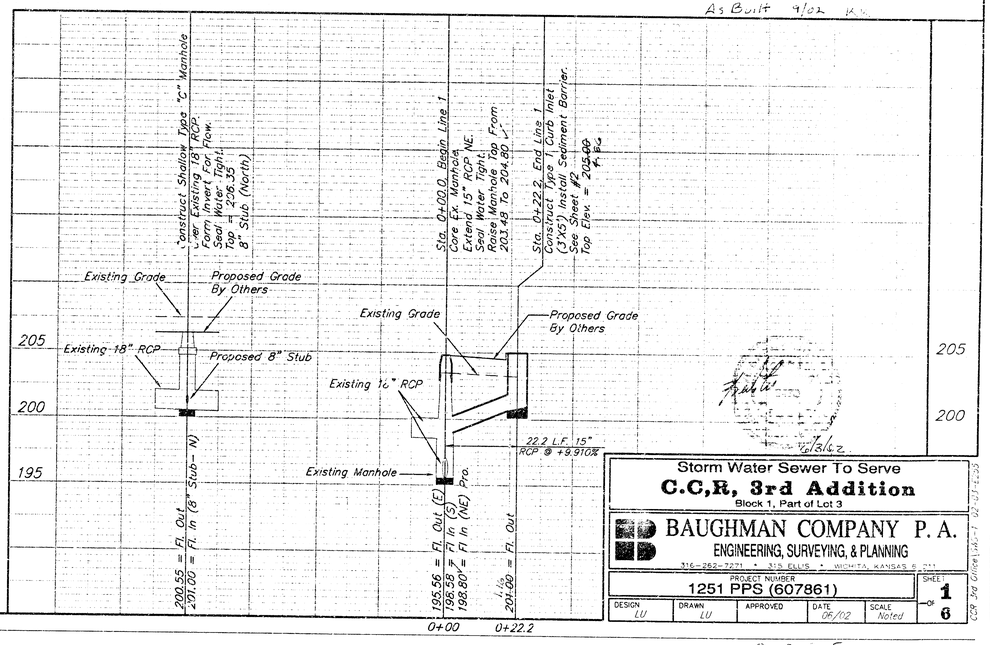

Storm Water Sewer To Serve
C.C,R, 3rd Addition
Block 1, Part of Lot 3

BAUGHMAN COMPANY P. A.
ENGINEERING, SURVEYING, & PLANNING
316-262-7271 • 315 ELLIS • WICHITA, KANSAS 67211

PROJECT NUMBER	SHEET
1251 PPS (607861)	1 OF 6

DESIGN	DRAWN	APPROVED	DATE	SCALE
LU	LU		06/02	Noted

CCR 3rd drawing 1 of 1 (2).dgn

18 3 5 5

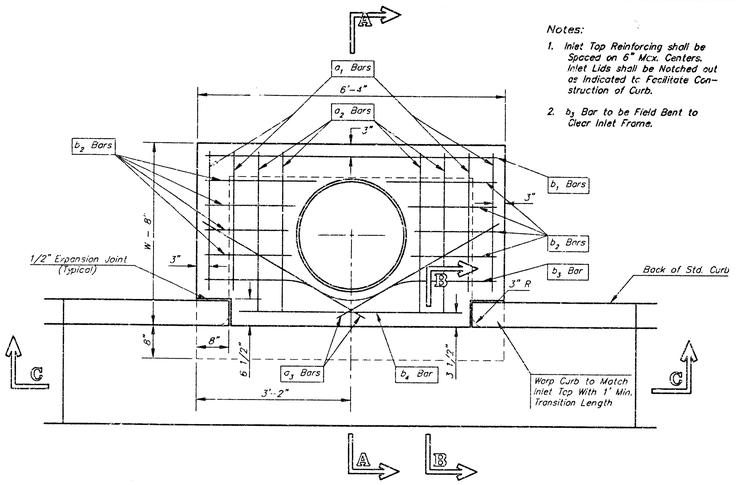

PLAN

Notes:

1. Inlet Top Reinforcing shall be Spaced on 6" Mcx. Centers. Inlet Lids shall be Notched out as Indicated to Facilitate Construction of Curb.
2. b_3 Bar to be Field Bent to Clear Inlet Frame.

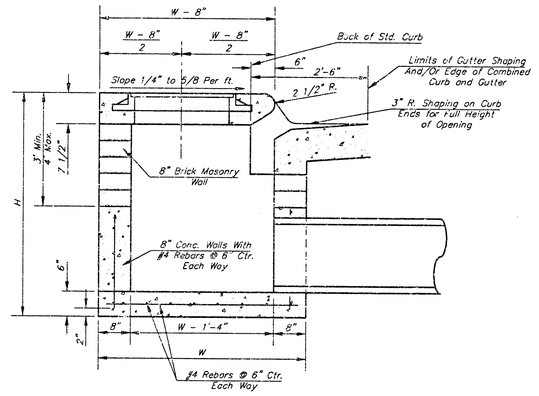

SECTION A–A

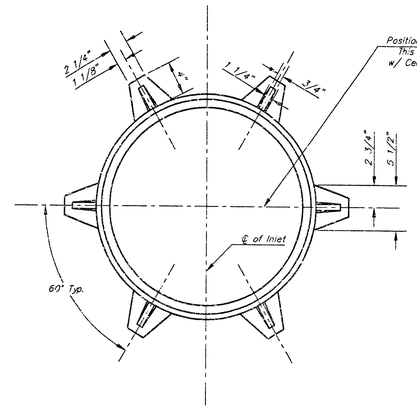

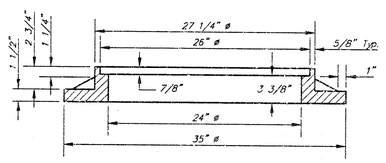

Wt. = 325 lbs.

MANHOLE RING AND COVER

*See City of Wichita Standard Manhole Ring and Cover Detail Sheet for Cover Details to Be Used With Inlet Frame.

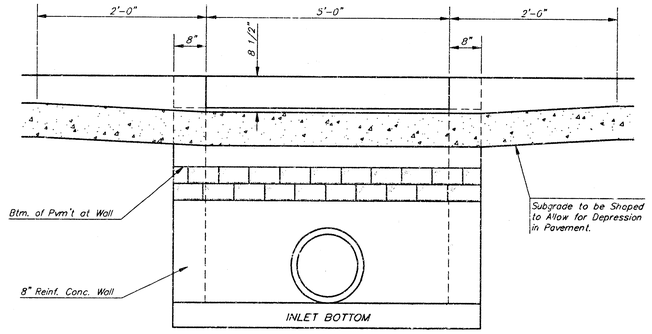

SECTION C–C

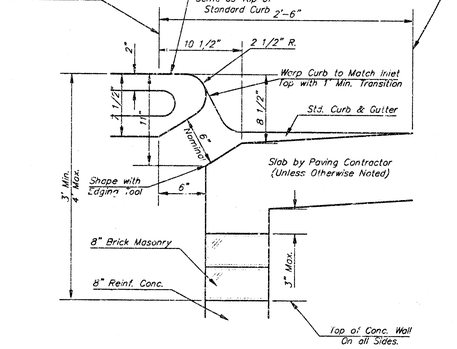

SECTION B–B

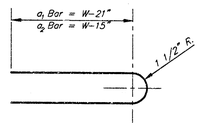

BENDING DIAGRAM

STEEL SCHEDULE

BAR		a_1	a_2	a_3	b_1 W=4'-4"	b_1 W=5'-4"	b_1 W=6'-4"	b_1 W=7'-4"	b_1 W=8'-4"	b_2	b_3	b_4	Wt. Lbs.
NUMBER		4	4	2	1	3	5	7	9	6	1	1	
SIZE		#4	#4	#4	#4	#4	#4	#4	#4	#4	#4	#6	
LENGTH	W=4'-4"	5'-7"	6'-7"	4'-0"	6'-1"	–	–	–	–	1'-9"	6'-2"	4'-8"	60±
	W=5'-4"	7'-7"	8'-7"	5'-0"	–	6'-1"	–	–	–	1'-9"	6'-2"	4'-8"	81±
	W=6'-4"	9'-7"	10'-7"	6'-0"	–	–	6'-1"	–	–	1'-9"	6'-2"	4'-8"	101±
	W=7'-4"	11'-7"	12'-7"	7'-0"	–	–	–	6'-1"	–	1'-9"	6'-2"	4'-8"	121±
	W=8'-4"	13'-7"	14'-7"	8'-0"	–	–	–	–	5'-1"	1'-9"	6'-2"	4'-8"	141±

Note: a_3 Bars to be Placed Approx. 2" Below Top of Inlet Cover.

STANDARD CURB INLET PRECAST TOPS					
W	PRE-CAST TOP SIZE			PIPE SIZE	CU. YD. CONC.
4'-4"	3'-8"	6'-4"	7 1/2"	21" & SMALLER	0.73±
5'-4"	4'-8"	6'-4"	7 1/2"	24" & 30"	0.51±
6'-4"	5'-8"	6'-4"	7 1/2"	36" & 42"	0.64±
7'-4"	6'-8"	6'-4"	7 1/2"	48" & 54"	0.77±
8'-4"	7'-8"	6'-4"	7 1/2"	60" & 66"	0.90±

GENERAL NOTES

1. Concrete tops to be installed on thin mortar cushion to insure full support along brick walls. Concrete tops may be cast in place or precast. Concrete used for inlet construction shall be concrete pavement mix.
2. Contractor shall have the option of constructing 8" brick masonry walls between the concrete inlet base and top on this inlet when W=6'-4" and H=7'-0" or less.
3. Inlet invert shall be shaped with 8 sack sand mix concrete to create flow channels and to increase hydraulic efficiency such that the inlet will be self cleaning between all inlet and/or outlet pipes.
4. The ends of all pipes installed in inlets shall be cut off flush with the inside face of the inlet wall.

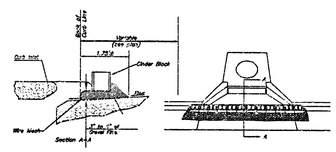

BLOCK & GRAVEL CURB INLET SEDIMENT BARRIER

Note: Use wire mesh or hardware cloth with 1/2" openings.

CITY OF WICHITA, KANSAS

TYPE 1 CURB INLET

INLET OPENING = 8'-0"x5'-0"

BAUGHMAN COMPANY P.A.
ENGINEERING, SURVEYING, & PLANNING
316-262-7271 • 315 ELLIS • WICHITA, KANSAS 67211

PROJECT NUMBER	SHEET
1251 PPS (607981)	2 OF 6

DESIGN	DRAWN	APPROVED	DATE	SCALE
C.O.W.	STAFF		06/02	NONE

DGN Std Dtl Sht\Super-- 01-02-2002

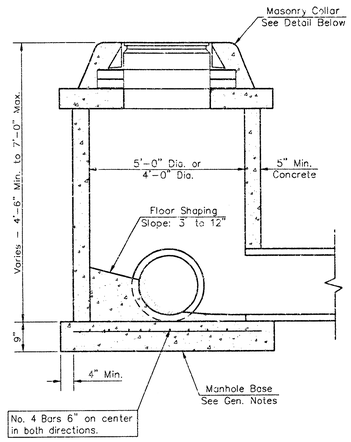

SHALLOW TYPE "P" MANHOLE

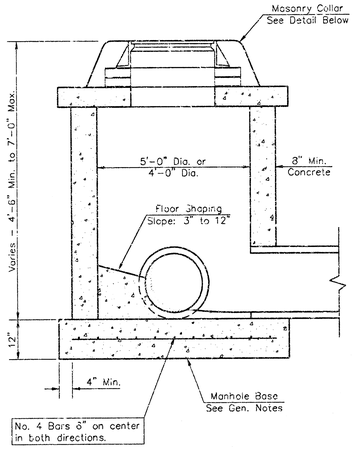

SHALLOW TYPE "C" MANHOLE

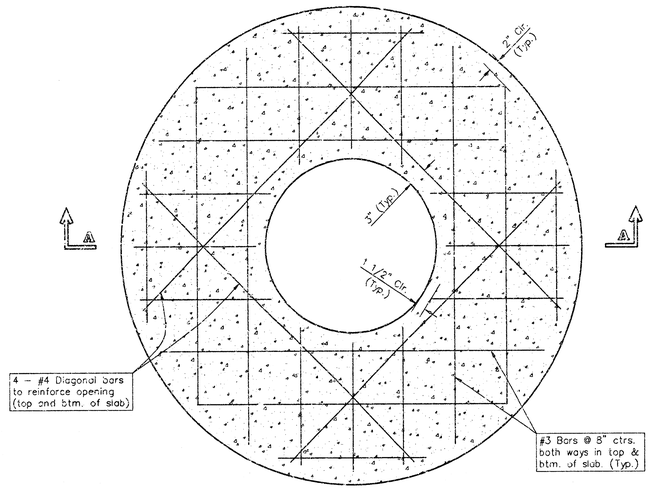

PLAN

GENERAL NOTES

1. Mortar used in masonry construction shall contain 8 sacks of cement per cubic yard. Concrete used in manhole bases shall conform to the requirements of concrete for concrete pavement construction as specified in the city standard paving specifications using city concrete cement mix without air entraining admixture. Mortar shall be placed around the manhole ring as shown on the drawings when manholes are constructed in unpaved areas. Manholes constructed where pipe sizes are smaller than 24" shall have an inside diameter of 4'. Manholes constructed where pipe sizes are 24" or larger shall have an inside diameter of 5'. Completed manhole shall be without leaks and water tight.

2. Reinforcing steel shall be installed in the manhole bases and shall consist of no. 4 bars placed on 6" centers in both directions. The manhole base reinforcement shall be placed 6" above the bottom of the manhole base. All costs for furnishing and installing reinforcing steel shall be included in the unit price bid for the manhole.

3. The floors of all manholes shall be shaped with flow channels such that the manholes will be self cleaning and free of areas where solids could be deposited as sewage flows through the manhole from all inlet pipes to the outlet pipe. Flow channels shall be formed to match the bottom halves of the inflowing pipes and the outflowing pipe as shown by the drawings. Manhole floors shall have slopes of 3 inches per foot in the areas outside of the flow channels sloped toward the flow channels. Pipes laid through manholes shall have the top half removed to neat lines for the full inside diameter of the manhole. Manhole floors shall then be shaped around the bottom half of the pipe which forms the flow channel.

4. Pipes installed within the excavation made for the manhole shall be cradled with concrete to the limits of the manhole excavation. When clay pipe is used, the cradle shall extend to the first joint outside the manhole. The cradle shall be terminated at the clay pipe joint in a manner which will maintain the flexibility of the joint. Cost of cradle within manhole excavation or to clay pipe joints adjacent to manhole shall be included in the unit price bid for the manhole.

5. Manhole cover castings and manhole frame castings shall conform to the requirements as indicated in the standard specifications and as shown in the standard detail drawings.

6. The crowns of inflowing pipes shall never be set lower than the crown of the outflowing pipe.

7. Standard shallow manholes type "P" and "C" shall be paid for at the unit price bid per each for the type and diameter indicated. All standard shallow manhole diameters will be 4' unless indicated otherwise.

8. All brick used in manhole construction shall meet Grade SW of ASTM C652 or C62-87.

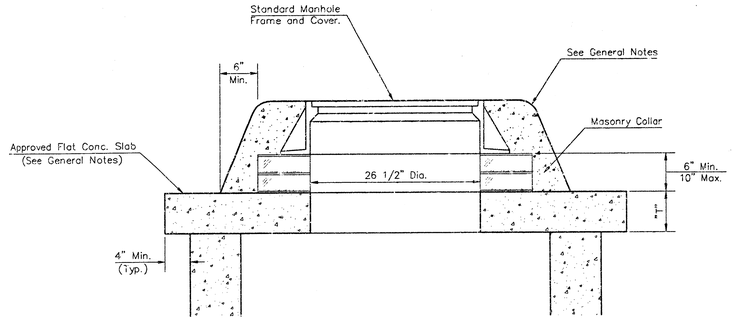

MASONRY COLLAR DETAIL

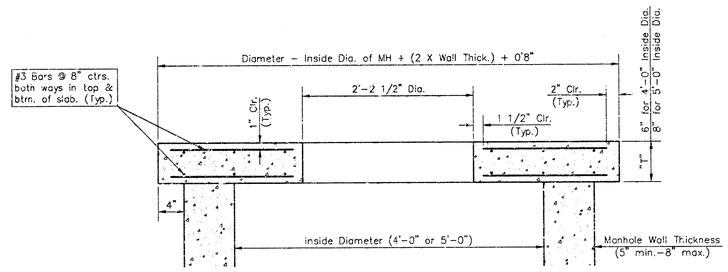

SECTION A-A

FLAT CONCRETE SLAB DETAILS

CITY OF WICHITA, KANSAS

STD. SHALLOW MANHOLES

TYPE 'P' AND TYPE 'C'

BAUGHMAN COMPANY P.A.

ENGINEERING, SURVEYING, & PLANNING

316-262-7271 • 315 ELLIS • WICHITA, KANSAS 67211

PROJECT NUMBER					SHEET
1251 PPS (607881)					3 of 6
DESIGN	DRAWN	APPROVED	DATE	SCALE	
STAFF	STAFF		06/02	NONE	

CCM 3/0 Drawings\Standard\12-03-1255

MANHOLE FRAME AND COVER DETAIL

ADOPTED AS STANDARD DESIGN BY
CITY OF WICHITA, KANSAS

MANHOLE COVER
Weight = 180 Lbs.

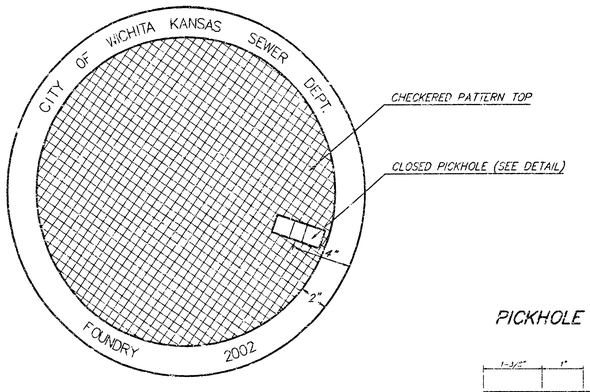

TOP VIEW

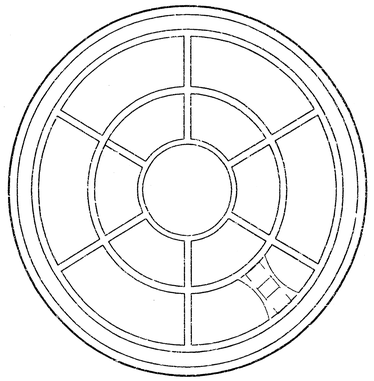

BOTTOM VIEW

PICKHOLE DETAIL

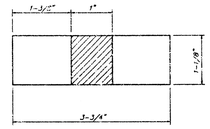

TOP VIEW

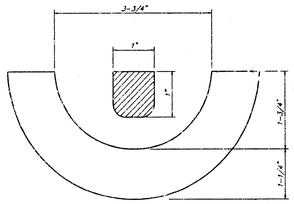

SECTION VIEW

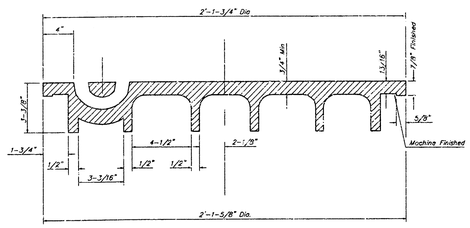

SECTION VIEW

MANHOLE FRAME
Weight = 145 Lbs.

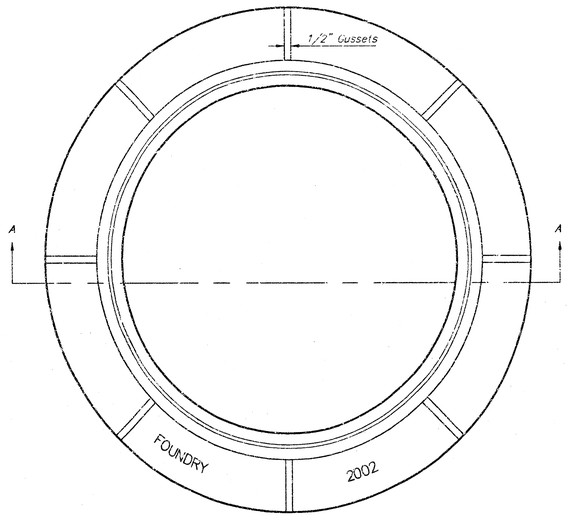

TOP VIEW

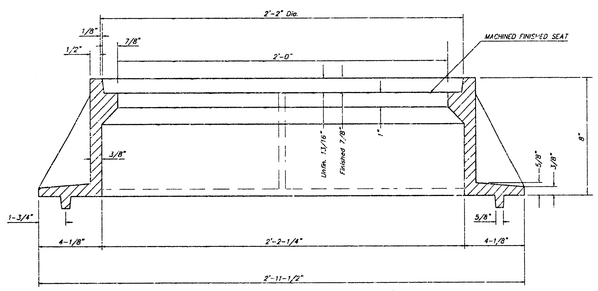

SECTION A–A

GENERAL NOTES

MANHOLE CASTINGS SHALL BE MANUFACTURED USING GOOD QUALITY GRAY IRON CONFORMING TO CLASS 30 OF A.S.T.M. DESIGNATION A-48. DIMENSIONS AND WEIGHTS SHOWN ON THE DETAILED DRAWINGS SHALL BE CONSIDERED AS MINIMUM REQUIREMENTS AND ANY DEVIATIONS FROM THE DIMENSIONS SHOWN MUST BE SPECIFICALLY APPROVED. THE FINISHED CASTINGS SHALL BE OF UNIFORM QUALITY, FREE FROM BLOWHOLES, POROSITY, HARD SPOTS, SHRINKAGE DISTORTIONS OR OTHER DEFECTS.

MANHOLE CASTINGS SHALL BE COATED WITH AN ASPHALT PAINT RESULTING IN A SMOOTH, TOUGH AND TENACIOUS COATING WHICH IS NOT BRITTLE OR TACKY.

MANHOLE CASTINGS SHALL BE MANUFACTURED SUCH THAT A COVER MANUFACTURED BY ANY ONE FOUNDRY WILL FIT INTERCHANGEABLY INTO A FRAME MANUFACTURED BY ANOTHER FOUNDRY AND STILL MEET ALLOWABLE CLEARANCES AND NON-ROCKING REQUIREMENTS. THIS WILL REQUIRE MANUFACTURING OF THE MATCHING FACES ON THE COVER AND THE FRAME TO CLOSE TOLERANCES

THE OUTSIDE CIRCUMFERENCE OF THE VERTICAL FACE OF THE COVER AND THE INSIDE CIRCUMFERENCE OF THE VERTICAL FACE IN THE FRAME RECESS SHALL BE MANUFACTURED TO TOLERANCES SUCH THAT THE CLEARANCE BETWEEN THE COVER AND FRAME WILL NOT EXCEED 1/8" AT ANY POINT AROUND THE CIRCUMFERENCE OF THE COVER. THE SEATING SURFACES BETWEEN THE COVER AND FRAME SHALL BE MACHINED SUCH AS THESE SURFACES SHALL MAKE FULL CONTACT FOR THEIR FULL CIRCUMFERENCE TO PRECLUDE THE COVER FROM ROCKING IN THE FRAME.

THE MANHOLE FRAME AND COVER SHALL BE MARKED WITH LETTERING INDICATING THE NAME OF THE MANUFACTURER AND THE YEAR WHEN THE COVER OR FRAME WAS CAST. THE COVER SHALL BE FURTHER IDENTIFIED WITH REGARDS TO OWNERSHIP USING LETTERS AT LEAST 1 INCH IN HEIGHT. THIS IDENTIFICATION SHALL BE "CITY OF WICHITA SEWER DEPARTMENT". THE WORD DEPARTMENT MAY BE ABBREVIATED. THE TEXTURE OF THE TOP SURFACE OF THE COVER SHALL BE MANUFACTURED IN A CHECKERED PATTERN DESIGN AS INDICATED ON THE DRAWINGS. SMOOTH BLOCKOUTS SHALL BE UTILIZED TO HIGHLIGHT THE LETTERING ON THE COVER SURFACE. THE TOTAL AREA OF SMOOTH SURFACE BLOCKOUT SHALL NOT EXCEED THE AREA AS INDICATED ON THE DRAWING. POSITIONING OF SMOOTH BLOCKOUTS AND LETTERING MAY VARY FROM THAT SHOWN ON THE DETAILED DRAWING.

MANHOLE FRAME AND COVER DETAIL
ADOPTED AS STANDARD DESIGN BY
CITY OF WICHITA, KANSAS

BAUGHMAN COMPANY P.A.
ENGINEERING, SURVEYING, & PLANNING
316-262-7271 • 315 ELLIS • WICHITA, KANSAS 67211

PROJECT NUMBER				SHEET
1251 FPS (607881)				4 OF 6
DESIGN: STAFF	DRAWN: STAFF	APPROVED	DATE: 7/6/07	SCALE: NONE

252-FP-00 Typical Wichita Std. Det.

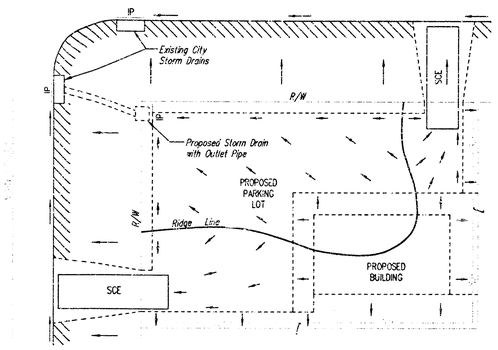

LEGEND

Flow Direction

IP — Inlet Protection – to be provided at all inlets subject to silt laden runoff.

– – – Silt Fence or Hay Bale Barrier – to be installed along property lines where runoff from construction site can run onto other properties.

SCE — Stabilized Construction Entrance – to be used at all locations where vehicles or equipment enter or exit property.

Back of Curb Protection – to be installed whenever curb is backfilled to less than 3 inches from top and disturbed earth exists adjacent thereto. (See City Standard Details.)

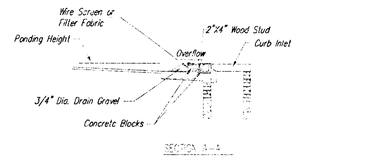

CURB INLET GRAVEL FILTERS
(INLET PROTECTION-RESIDENTIAL STREETS ONLY)

NOTE: Other types of curb inlet protection may be approved by the city so long as equal protection is provided.

A gravel inlet filter shall be installed at sump locations on residential streets. This type of protection is not to be used on arterial or collector streets at any time that it would pose an undue traffic hazard.

Instructions for Installing:

STEP 1: Place concrete blocks around the inlet as shown on drawing. Insert 2x4 board as shown.
STEP 2: Wrap 1/2" mesh wire screen around the concrete blocks.
STEP 3: Place 1" to 1-1/2" diameter rock around the blocks and wire screen. Be sure the rock extends down from the top of the concrete block.
STEP 4: To prevent damage to vehicles, signs warning drivers about the structures may be necessary. An alternative installation is the use of gravel bags supported by a 2"x4" board to prevent collapsing.

Use of rock with diameters smaller than 1" in the bag may result in clogging of pores and reduce the amount of water flowing into an inlet.

Maintenance:

All curb inlet gravel filters shall be inspected and repaired after each runoff event. Sediment deposits are to be removed once material is within 8 cm (3 inches) of the top of any block. Periodically, the gravel shall be raked to increase infiltration and filtering of runoff waters. Accumulated sediment is to be removed immediately from roads and streets.

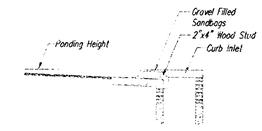

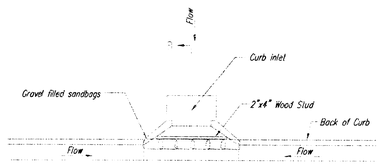

CURB INLET SANDBAG FILTERS
(INLET PROTECTION)

NOTE: Other types of curb inlet protection may be approved by the City so long as equal protection is provided.

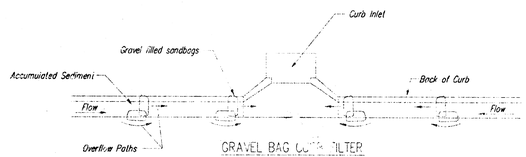

GRAVEL BAG CURB FILTER
(INLET PROTECTION)

NOTE: Place two or more sets of bags in a manner that results in maximum support. The flow line bag must be lower than top of curb.

CURB SEDIMENT TRAPS

When inlets are located on streets having a grade (i.e., sump conditions do not exist), installing gravel (or sand) bags in the gutter flow line to create small sediment traps can be considered. Gravel bags are recommended over sand bags to allow for drainage.

If the spacing between bags becomes too large, little sediment may be trapped. Spacing of bags should be completed using the table or graph that illustrates placement distances based upon street slope. When installed in the gutter, bag tops must be lower than the sidewalk.

Spacing:

Gravel bags are to be placed according to street grades using the following table or graph that appears below.

GRADE (%)	SPACING (FEET)
0.5	75
1.0	45
2.0	18
3.0	12
4.0	9
5.0	6

Maintenance:

Collected sediment shall be removed after every runoff event. Bags that are destroyed by vehicular traffic or through natural deterioration are to be immediately replaced.

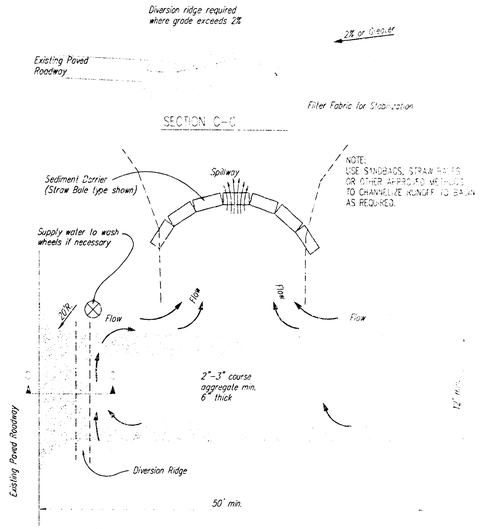

STABILIZED CONSTRUCTION ENTRANCE

NOTES:

1. THE ENTRANCE SHALL BE MAINTAINED IN A CONDITION THAT WILL PREVENT TRACKING OR FLOWING OF SEDIMENT ONTO PUBLIC RIGHTS-OF-WAY. THIS MAY REQUIRE TOP DRESSING, REPAIR AND/OR CLEANOUT OF ANY MEASURES USED TO TRAP SEDIMENT.
2. WHEN NECESSARY, WHEELS SHALL BE CLEANED PRIOR TO ENTRANCE ONTO PUBLIC RIGHT-OF-WAY.
3. WHEN WASHING IS REQUIRED, IT SHALL BE DONE ON AN AREA STABILIZED WITH CRUSHED STONE THAT DRAINS INTO AN APPROVED SEDIMENT TRAP OR SEDIMENT BASIN, AS SHOWN ABOVE.
4. DRIVE ENTRANCES ONTO RESIDENTIAL LOTS WILL NOT BE REQUIRED TO HAVE THE SEDIMENT BARRIER SHOWN, BUT WHEEL WASHING MAY BE REQUIRED IF STABILIZED ENTRANCE IS NOT SUFFICIENT TO KEEP MUD FROM BEING TRACKED ONTO ADJACENT STREET. ENTRANCE SHALL EXTEND FROM BACK OF CURB TO DWELLING.

General Notes

1. This standard detail sheet is a part of your building permit. The BMP's shown on this sheet are considered minimum standards. Whenever sediment enters the streets, storm sewers, ditches, or ponds, contractor will install additional BMP's, as needed, to correct the problem.
2. Follow these general principals on all commercial building sites.
3. The soil erosion BMP's shown herein must be in place at all times during construction until such time as the site is re-established with paving or grass.
4. Failure to install, protect, and maintain BMP's are violations of Section 15.32 of the City Code and will subject the contractor to the penalties provided therein. Included with your permit is an orange "notice" sign that must be posted on-site in a conspicuous place at all times during construction. This sign is provided to assist you in the maintenance of BMP'S.
5. Back of Curb Protection: Can include hay bale, silt fence, or Curlex barrier, as shown on City BMP standard details. This BMP must remain in place until the area between the curb and right-of-way line has been permanently stabilized.
6. The General Contractor is responsible for the installation and maintenance of all BMP's.
7. Should the site abut a lake, BMP's will be installed to prevent sediment from entering the lake.
8. Any mud inadvertently tracked onto any street will be cleaned up by the general contractor at the end of each day's work.

CITY OF WICHITA

CHRISTOPHER M. CARRIER, P.E.
STORM WATER ENGINEER

1251 PPS (607861) NA

06/02 SHEET 5 OF 6

C.C.R. 3RD ADDITION

TO WICHITA, SEDGWICK COUNTY, KANSAS

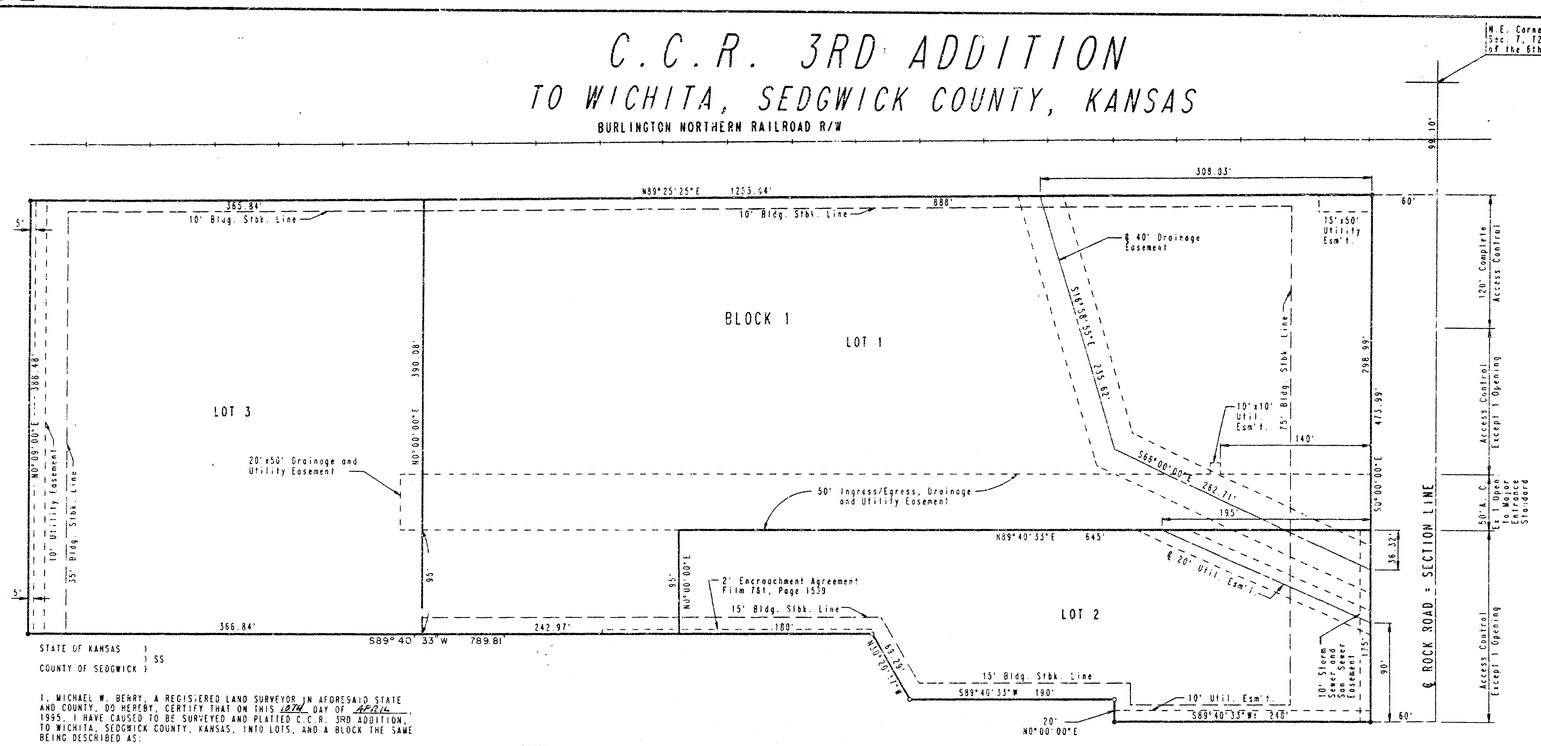

SCALE: 1"=60'

● = IRON FOUND
○ = 3/4" IRON SET

A.C. = ACCESS CONTROL

B.M. - CITY OF WICHITA BENCH MARK DISC, 42' NORTH AND 38' EAST OF THE CENTERLINE OF ROCK ROAD AND 13TH STREET NORTH.
ELEV.=186.849 CITY DATUM

B.M. - CITY OF WICHITA BENCH MARK DISC, 28' EAST OF CENTERLINE OF ROCK ROAD AND 51' NORTH OF CENTERLINE OF RAILROAD TRACKS
ELEV.=199.701 CITY DATUM

FOR ADDITIONAL BUILDING SETBACK LINES SEE C.U.P. U.P.-215, AMENDMENT NUMBER ONE, ON FILE AT THE WICHITA-SEDGWICK COUNTY METROPOLITAN AREA PLANNING DEPARTMENT.

STATE OF KANSAS)
) SS
COUNTY OF SEDGWICK)

I, MICHAEL W. BERRY, A REGISTERED LAND SURVEYOR IN AFORESAID STATE AND COUNTY, DO HEREBY CERTIFY THAT ON THIS 12TH DAY OF April, 1995, I HAVE CAUSED TO BE SURVEYED AND PLATTED C.C.R. 3RD ADDITION, TO WICHITA, SEDGWICK COUNTY, KANSAS, INTO LOTS, AND A BLOCK THE SAME BEING DESCRIBED AS:

LOTS 1, 2, AND 3, BLOCK 1, C.C.R. 2ND ADDITION TO WICHITA, SEDGWICK COUNTY, KANSAS, TOGETHER WITH THE FOLLOWING DESCRIBED TRACT:

BEGINNING AT THE NORTHERN MOST NORTHEAST CORNER OF LOT 1, SECURITY STORAGE PROPERTIES ADDITION TO WICHITA, SEDGWICK COUNTY, KANSAS, SAID POINT BEING IN THE WEST LINE OF LOT 2, BLOCK 1, C.C.R. 2ND ADDITION TO WICHITA, SEDGWICK COUNTY, KANSAS; THENCE BEARING S0°00'00"E ALONG THE COMMON LINE TO SAID LOT 1 AND LOT 2 A DISTANCE OF 60.00 FEET; THENCE BEARING S89°40'33"W, 190.00 FEET; THENCE BEARING N30°20'12"W, 69.29 FEET TO A POINT IN THE NORTH LINE OF SAID LOT 1; THENCE BEARING N89°40'33"E, ALONG THE NORTH LINE OF SAID LOT 1, 225.00 FEET TO THE POINT OF BEGINNING.

ALL PORTIONS OF LOTS 1, 2, AND 3, BLOCK 1, IN C.C.R. 2ND ADDITION TO WICHITA, SEDGWICK COUNTY, KANSAS, AND THAT PORTION OF LOT 1, SECURITY STORAGE PROPERTIES ADDITION TO WICHITA, SEDGWICK COUNTY, KANSAS, AS DESCRIBED ABOVE AND THAT PORTION OF EASEMENT AS PER FILM 783, PAGE 879 LYING WITHIN THIS PLAT ARE HEREBY VACATED AND REPLATTED BY VIRTUE OF K.S.A. 12-512(b) AMENDED.

MICHAEL W. BERRY, R.L.S. NO. 946
PROFESSIONAL ENGINEERING CONSULTANTS, P.A.

MICHAEL W. BERRY, REGISTERED, LS-946, KANSAS, LAND SURVEYOR
4.12.95

KNOW ALL MEN BY THESE PRESENTS THAT WE, THE UNDERSIGNED PROPERTY OWNERS OF THE LAND AS ABOVE SET FORTH IN THE SURVEYOR'S CERTIFICATE, HAVE CAUSED THE LAND TO BE SURVEYED AND PLATTED INTO LOTS, AND A BLOCK, THE SAME TO BE KNOWN AS C.C.R. 3RD ADDITION TO WICHITA, SEDGWICK COUNTY, KANSAS.

EASEMENTS: AS INDICATED FOR THE CONSTRUCTION AND MAINTENANCE OF PUBLIC UTILITIES AND DRAINAGE ARE HEREBY GRANTED.

THE 50 FOOT INGRESS/EGRESS, DRAINAGE AND UTILITY EASEMENT IS HEREBY DEDICATED FOR PUBLIC UTILITIES AND DRAINAGE AND TO PROVIDE ACCESS TO AND FROM ROCK ROAD TO LOTS 1, 2, AND 3, BLOCK 1.

ALL ABUTTERS RIGHT OF ACCESS TO AND FROM ROCK ROAD, OVER AND ACROSS THE EAST LINE OF LOTS 1 AND 2, BLOCK 1, ARE HEREBY GRANTED TO THE CITY OF WICHITA, PROVIDED HOWEVER THAT LOT 1, BLOCK 1, SHALL HAVE ACCESS TO ROCK ROAD AT TWO (2) LOCATIONS, AND LOT 2, BLOCK 1 SHALL HAVE ACCESS TO ROCK ROAD AT ONE (1) LOCATION, AS SHOWN, SUCH LOCATION TO BE DETERMINED BY THE CITY ENGINEER OF THE CITY OF WICHITA, KANSAS.

FOR ADDITIONAL BUILDING SETBACK LINES SEE C.U.P. O.P.-215, AMENDMENT NUMBER ONE, ON FILE AT THE WICHITA-SEDGWICK COUNTY METROPOLITAN AREA PLANNING DEPARTMENT.

OWNERS: _____

C.C.R. ASSOCIATES, A KANSAS GENERAL PARTNERSHIP

BY: _____, PARTNER
STEPHEN L. CLARK

SECURITY STORAGE PROPERTIES, A KANSAS GENERAL PARTNERSHIP

BY: _____, PARTNER
STEPHEN L. CLARK

BY: _____, PARTNER
ORLIN E. ARD, JR.

20.00 ck

OWNER:

HAVERTY FURNITURE COMPANIES, INC.
A MARYLAND CORPORATION

BY: _____
RAWSON HAVERTY, SR. CHAIRMAN

STATE OF KANSAS)
) SS
COUNTY OF SEDGWICK)

BE IT REMEMBERED THAT ON THIS 12 DAY OF April, 1995, BEFORE ME A NOTARY PUBLIC IN AFORESAID STATE AND COUNTY, CAME STEPHEN L. CLARK, PARTNER OF C.C.R. ASSOCIATES, A KANSAS GENERAL PARTNERSHIP TO ME PERSONALLY KNOWN TO BE THE SAME PERSON WHO EXECUTED THE FOREGOING INSTRUMENT OF WRITING AND DULY ACKNOWLEDGED THE EXECUTION OF SAME FOR AND ON BEHALF AND AS THE VOLUNTARY ACT AND DEED OF SAID PARTNERSHIP, IN TESTIMONY WHEREOF I HAVE HEREUNTO SET MY HAND AND AFFIXED MY NOTARIAL SEAL THE DAY AND YEAR ABOVE WRITTEN.

_____, NOTARY PUBLIC
SHARON K. PACK

MY COMMISSION EXPIRES June 6, 1996

STATE OF KANSAS)
) SS
COUNTY OF SEDGWICK)

BE IT REMEMBERED THAT ON THIS 12 DAY OF April, 1995, BEFORE ME A NOTARY PUBLIC IN AFORESAID STATE AND COUNTY, CAME STEPHEN L. CLARK AND ORLIN E. ARD, JR., PARTNERS OF SECURITY STORAGE PROPERTIES, A KANSAS GENERAL PARTNERSHIP TO ME PERSONALLY KNOWN TO BE THE SAME PERSONS WHO EXECUTED THE FOREGOING INSTRUMENT OF WRITING AND DULY ACKNOWLEDGED THE EXECUTION OF SAME FOR AND ON BEHALF AND AS THE VOLUNTARY ACT AND DEED OF SAID PARTNERSHIP. IN TESTIMONY WHEREOF I HAVE HEREUNTO SET MY HAND AND AFFIXED MY NOTARIAL SEAL THE DAY AND YEAR ABOVE WRITTEN.

_____, NOTARY PUBLIC
SHARON K. PACK

MY COMMISSION EXPIRES June 6, 1996

STATE OF GEORGIA)
) SS
COUNTY OF COBB)

BE IT REMEMBERED THAT ON THIS 4th DAY OF April, 1995, BEFORE ME A NOTARY PUBLIC IN AFORESAID STATE AND COUNTY, CAME RAWSON HAVERTY, SR., CHAIRMAN OF HAVERTY FURNITURE COMPANIES, INC., A MARYLAND CORPORATION, TO ME PERSONALLY KNOWN TO BE THE SAME PERSONS WHO EXECUTED THE FOREGOING INSTRUMENT OF WRITING AND DULY ACKNOWLEDGED THE EXECUTION OF SAME FOR AND ON BEHALF AND AS THE VOLUNTARY ACT AND DEED OF SAID CORPORATION, IN TESTIMONY WHEREOF I HAVE HEREUNTO SET MY HAND AND AFFIXED MY NOTARIAL SEAL THE DAY AND YEAR ABOVE WRITTEN.

_____, NOTARY PUBLIC #1454911
GREGG SHAFER

MY COMMISSION EXPIRES _____

WE BOATMEN'S FIRST NATIONAL BANK OF KANSAS CITY, IN KANSAS CITY, MISSOURI, HOLDER OF A MORTGAGE ON PART OF THE ABOVE DESCRIBED TRACT OF LAND DO HEREBY CONSENT TO THE PLATTING OF C.C.R. 3RD ADDITION TO WICHITA, SEDGWICK COUNTY, KANSAS.

BY: _____ VICE PRESIDENT
JOSEPH CLOSE

STATE OF MISSOURI)
) SS
COUNTY OF JACKSON)

BE IT REMEMBERED THAT ON THIS 17th DAY OF April, 1995 BEFORE ME A NOTARY PUBLIC IN AFORESAID STATE AND COUNTY, CAME JOSEPH CLOSE, VICE PRESIDENT OF BOATMEN'S FIRST NATIONAL BANK OF KANSAS CITY, IN KANSAS CITY, MISSOURI, TO ME PERSONALLY KNOWN TO BE THE SAME PERSON WHO EXECUTED THE FOREGOING INSTRUMENT OF WRITING AND DULY ACKNOWLEDGED THE EXECUTION OF SAME FOR AND ON BEHALF AS THE VOLUNTARY ACT AND DEED OF SAID BANK, IN TESTIMONY WHEREOF I HAVE HEREUNTO SET MY HAND AND AFFIXED MY NOTARIAL SEAL THE DAY AND YEAR ABOVE WRITTEN.

_____, NOTARY PUBLIC

MY COMMISSION EXPIRES 11-22-96

THIS PLAT HAS BEEN SUBMITTED TO AND APPROVED BY THE WICHITA-SEDGWICK COUNTY METROPOLITAN AREA PLANNING COMMISSION, WICHITA, KANSAS, DATED THIS 9th DAY OF March, 1995.

_____, CHAIRMAN
JOHN D. McKAY, JR.

_____, SECRETARY
MARVIN S. KROUT

THIS PLAT APPROVED AND ALL DEDICATIONS SHOWN HEREON ARE ACCEPTED BY THE CITY COUNCIL OF THE CITY OF WICHITA, KANSAS, DATED THIS 10th DAY OF MAY, 1995.

_____, MAYOR
BOB KNIGHT

_____, DEPUTY CITY CLERK
PAT BURNETT

ENTERED ON TRANSFER RECORD THIS 23rd DAY OF May, 1995.

_____, COUNTY CLERK
SUSAN E. CROCKETT SPOON

THIS IS TO CERTIFY THAT THIS INSTRUMENT WAS FILED FOR RECORD IN THE REGISTER OF DEEDS OFFICE AT 2:00 P.M., ON THIS 23RD DAY OF MAY, 1995.

_____, REGISTER OF DEEDS
PAT KETTLER

_____, DEPUTY
ED RESA

18 03 03 02