Project Number	Sheet Number	Total Sheets
6234	1	4

CONSTRUCTION PLANS FOR

DRAINAGE CHANNEL & STORM SEWER IMPROVEMENTS

TO SERVE

ENTERPRISE ELEMENTARY SCHOOL USD #259

THE CITY OF WICHITA

SEDGWICK COUNTY, KANSAS

MICHAEL E. LINDEBAK, P.E. -

WICHITA CITY ENGINEER

GENERAL NOTES

1. The tops of inlets and manholes as noted on the plans may vary so as to meet proposed top of curb elevations or pavement elevations. the field engineer shall locate inlets and manholes with reference to proposed paving plans of the pertinent streets.

2. All concrete shall be standard paving mix unless otherwise noted.

3. The Contractor shall be responsible for preserving property irons. The Contractor shall be required to re-establish any property irons which are damaged or destroyed by his construction operations. Such irons shall be re-established by a licensed land surveyor in accordance with state laws.

4. Trees to be removed are marked ⊗. All trees which in the opinion of the field engineer can be saved, shall be saved.

5. Contractor shall notify utility companies of construction scheduling.

6. Existing utilities and their locations, as shown on the plans, represent the best information obtainable for design. Location information has been obtained from the various companies and is either from company utility drawings or company provided field locations. The plan locations shown are not guaranteed. Additional existing cables. utilities may also be encountered.

7. Contractor will be required to provide a minimum advance notice of forty-eight (48) hours to utility companies to starting any excavation as follows:

Kansas One-Call 687-2470
Or 687-2470 (Local Wichita)

The Contractor must notify the following in case of an emergency:

Cablevision	263-2061
KG&E (Gas & Electric)	383-8600
Southwestern Bell Telephone Co.	1-800-734-7590
City of Wichita Water & Sewer Maint.	262-6000

8. Rubble from the removal of miscellaneous structures and excess excavation which is to be wasted shall be disposed of on sites to be provided by the Contractor. These sites shall also be approved by the Engineer as to suitability, appearance, and site location. Locations that, in the opinion of the Engineer, will leave an unsightly appearance will not be approved. All disposal sites must be approved by the Kansas Department of Health and Environment. Material either stockpiled or disposed of in a flood plain would require a Kansas State Board of Agriculture permit. Any material dumped in waters of the United States or wetlands is subject to the U. S. Corps of Engineers permitting regulations. Any material buried or stockpiled beyond approved construction limits would require archaeological investigations, unless buried in a previously approved barrow location.

9. Contractor shall reseed and mulch all disturbed areas. Cost shall be considered subsidiary to site restoration.

10. Grading, Storm Sewer, and Channel Construction shall be Constructed in accordance with the City of Wichita standard specifications.

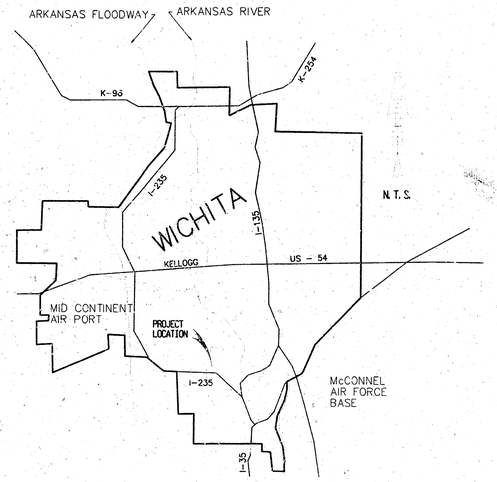

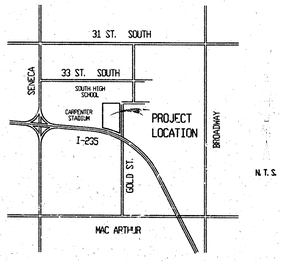

INDEX OF SHEETS

1 MAP AND INDEX
2 DETAILS
3-4 PLAN AND PROFILE

* Bust in Coords.
AS-BUILT
10/10/02
Date
Signed

Approved as Noted

By City Engineer of Wichita

Storm Sewers VRH 6/24/02

PRIVATE PROJECT NO. 1254PPS

OCA 607861

MAY, 2002

PLANS PREPARED BY

GOEDECKE ENGINEERING CO.

EL DORADO, KANSAS

Booked E-1 8/13/03 RDL

NOTE TO CONTRACTOR

Inspection and testing for this project is to be provided by a licensed consulting engineering firm under contract with the owner/developer. Said inspection to be in accordance with The City of Wichita standard consturction engineering practices and certified by a licensed professional engineer. No work shall be performed in dedicated easements or the public right-of-way by the contractor without such inspection not shall any work be commenced in dedicated easements or public right-of-way without written authorization by the city engineer.

MARTIN H. GOEDECKE LICENSED 6891 KANSAS PROFESSIONAL ENGINEER

Box 629	GOEDECKE ENGINEERING CO. 205 S. Main El Dorado, Kansas 67042	321-3773
SCALE: N.T.S. DATE: 5/10/02	PROJECT NO. 6234	DRAWN BY: GED REVISED BY:
MAP AND INDEX		
ENTERPRISE ELEMENTARY SCHOOL		FILE: 6234-STORM-TIT

CITY OF WICHITA PROJECT NO. 1254PPS (607861)

Project Number	Sheet Number	Total Sheets
6234	2	4

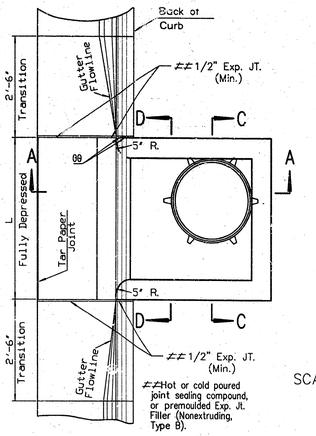

≠≠Hot or cold poured joint sealing compound, or premoulded Exp. Jt. Filler (Nonextruding, Type B).

TYPE 22 INLET PLAN

NOTE:
Use Class A Concrete throughout.
All exposed edges shall be finished with an edging tool.
Reinforcing bars shall be bent around pipe.
No deductions in concrete quantities shall be made for pipe openings.
At the contractors option Class A Concrete (AE) or mix used in concrete pavement may be used throughout.

When so ordered by the Engineer, the top of the inlet shall be sloped slightly to approximately fit the ground line or other conditions.
All exposed cast iron surfaces shall be painted either in the shop or in the field with one coat of a zinc dust paint, followed by two field coats of aluminum paint.

Floor of inlet shall be shaped as shown in various "EXAMPLES" on Reinforced Concrete Manhole Standard NO. 633. Concrete used for shaping shall be unreinforced Class A concrete. No addition in concrete quantities shall be made for shaping floor of inlets.
All bars are NO.4 bars at 6" spacing and shall have a minimum clearance of 1 1/2" unless otherwise noted on the plans.
Cast iron steps shall be installed in all storm sewer inlets with an H-dimension greater than 6 feet.
When directed by the Engineer, small openings may be required in the back of the inlet in order to drain a low area. Reinforcing bars will extend through the opening. No deductions in concrete quantities will be made for these openings.

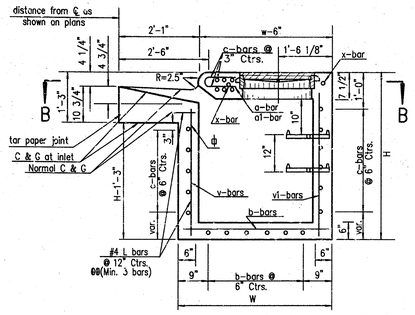

SECTION A-A

℄ OPTIONAL CONSTRUCTION JOINT (or tar paper joint if gutter is constructed free from inlet).

SCALE: N.T.S.

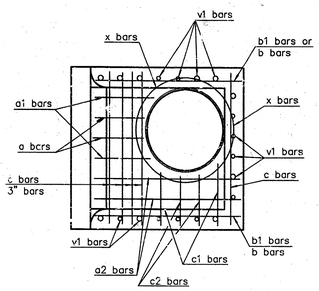

SECTION B-B

The weight of castings includes no allowance for fillets and overruns. All castings shall be gray iron and shall comply with ASTM A-48 class 25S.
See sheet entitled "Reinforcing Steel for Inlets and Manholes" for details and quantities.
No deductions will be made in pay length of curb, gutter, or curb and gutter through the inlet area.
For additional notes and details on Light Type Cast Iron Manhole Cover and Ring Type C, and Cast Iron Steps, see Standard drawing Number 633 "Reinforced Concrete Manhole".

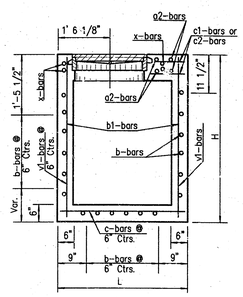

SECTION C-C

00 At the Contractor's option, gutter may be constructed continuous, L bars omitted, and a 1/2" Expansion joint installed between gutter and face of inlet and between curb and side of inlet with a tar paper joint between bottom of gutter and top of wall. In this method of construction, the inlet shall be completely free of the gutter and curb.

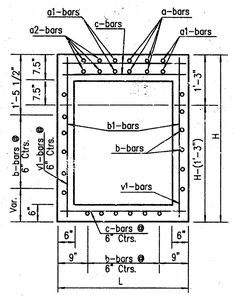

SECTION D-D

NOTE:
Contractor May Furnish Precast Inlets

STANDARD CURB INLET

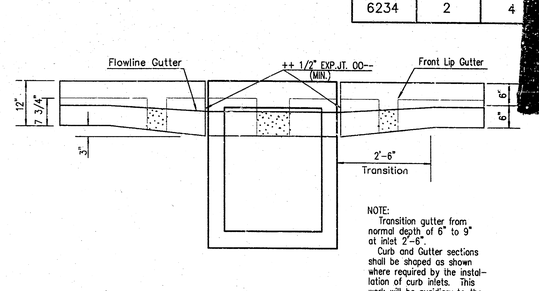

ELEVATION

NOTE:
Transition gutter from normal depth of 6" to 9" at inlet 2'-6".
Curb and Gutter sections shall be shaped as shown where required by the installation of curb inlets. This work will be susidiary to the other bid items.

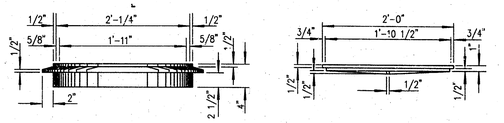

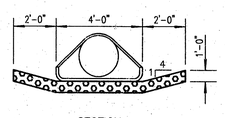

SECTION

PROFILE

TYPICAL RIP-RAP END SECTION DETAIL

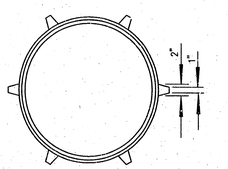

CAST IRON MANHOLE RING WEIGHT = 531bs.

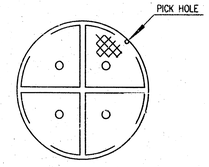

CAST IRON MANHOLE COVER WEIGHT = 641bs.

TYPE C

LIGHT TYPE MANHOLE COVER & RING

Plan

Section A-A

OFFSET CURB INLET STANDARD CURB

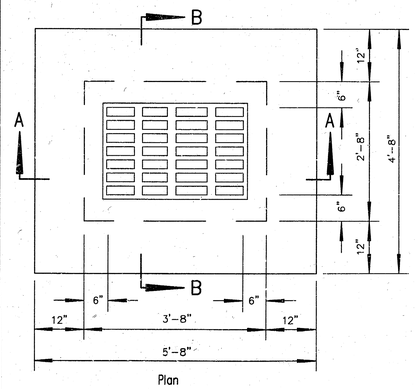

Plan

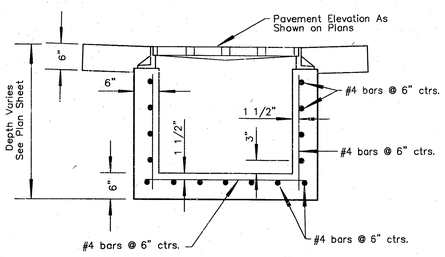

Section A-A

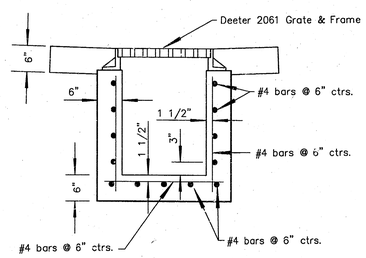

Section B-B

AREA INLET

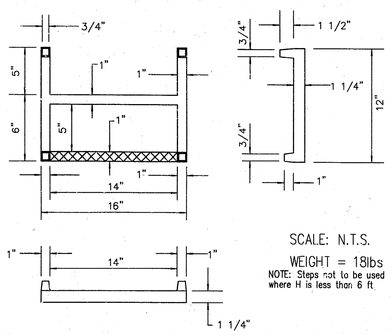

SCALE: N.T.S.
WEIGHT = 18lbs
NOTE: Steps not to be used where H is less than 6 ft.

CAST IRON STEP

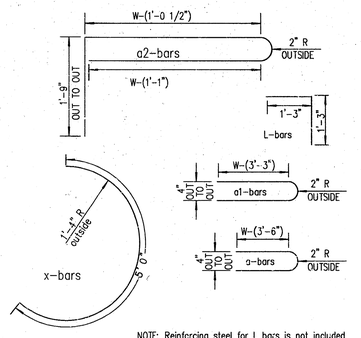

NOTE: Reinforcing steel for L bars is not included in the steel quantity and is subsidiary to the other inlet items.

BENDING DIAGRAMS

Box 629	GOEDECKE ENGINEERING CO. 205 S. Main El Dorado, Kansas 67042	321-377
SCALE: AS NOTED	PROJECT NO. 6234	DRAWN BY:
DATE: 05/28/02		REVISED BY:
ENTERPRISE SCHOOL STORM SEWER		
DETAILS		FILE: MS- Det

Project Number	Sheet Number	Total Sheets
6234	3	4

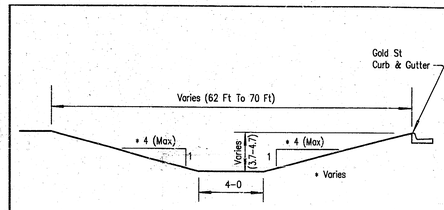

TYPICAL CHANNEL SECTION

Legend:

- Set Property Bar
- Found Property Bar
- Light Pole
- Power Pole
- Telephone Pedestal
- Gas Meter
- Water Valve
- Water Meter
- Existing Fire Hydrant
- Proposed Fire Hydrant
- Manhole
- Tree
- Sign
- Overhead Electric Line
- Underground Electric Line
- Gas Line
- Fiber Optic Cable
- Buried Telephone Line
- Waterline
- Sanitary Sewer Line
- Storm Sewer Line

Benchmarks:

BM "Brass Disk" Elev.92.53' (City Datum) Elev.1275.02 (Sea Level)
BM Monument is 13'± West of Fire Hydrant at the Northwest Corner of Seneca Street and 35th Street Intersections. Disk is .2 deep

TBM-1 SS-MH Rim Elev. 91.77
North Rim On Sanitary Manhole In The Centerline Of 35th Street. This MH Is North Of The Maintonce Shed Near The NW Corner Of The Track And Field Stadium.

TBM-2 T.O.C Elev 94.12
TBM-2 Is At The Center Of The East Tennis Court At The East Edge of Concrete, Near The Net At Gate Opening.

TBM-3 Top of Pipe Elev 93.11
Found 1/2" Thick Walled Pipe 51'± South Of North Property Line And 14.5' West Of Chain Link Fence. TBM-3 Is Also 92.5'± West of Bar & Cap (Ctr.Sec. 8-28S-1E) in 35th Street. Top Of Pipe is 1.5'± Deep

GOLD STREET CHANNEL

LINE #1

All Elevations Shown Are City of Wichita Datum Unless Otherwise Noted

Note: Offset Curb Inlet Stationing Is Center of Inside Wall Face of Curb Side Wall.

Box 629 GOEDECKE ENGINEERING CO. 321-3773
205 S. Main El Dorado, Kansas 67042

SCALE: AS NOTED | DRAWN BY: RMH
DATE: 05/28/02 | PROJECT NO. 6234 | REVISED BY: CLG

ENTERPRISE SCHOOL STORM SEWER

PLAN AND PROFILE

FILE: MS-6 Channel-P

Project Number	Sheet Number	Total Sheets
6234	4	4

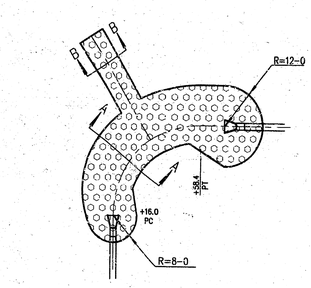

RIP-RAP Detail

Sta. 0+16.0 To Sta. 0+65.4

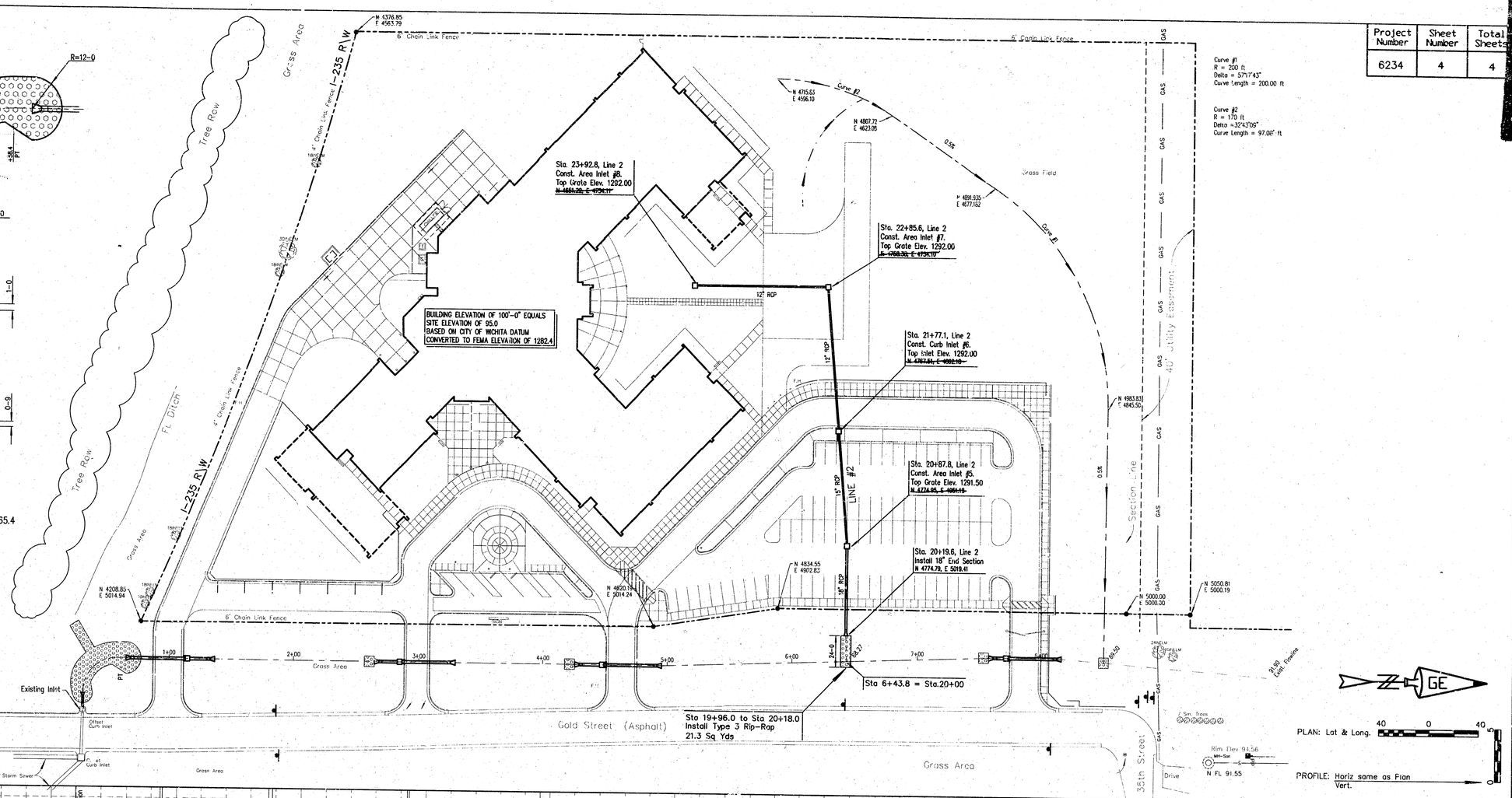

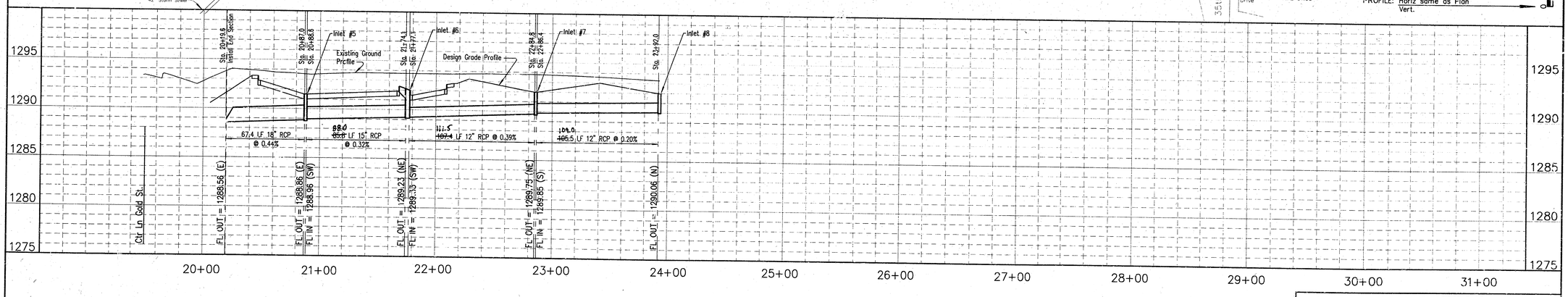

LINE #2

All Elevations Shown Are City of Wichita Datum Unless Otherwise Noted

Note: Offset Curb Inlet Stationing Is Center of Inside Wall Face of Curb Side Wall.

Area Inlet Stationing Is Center of Inlet

Box 629 GOEDECKE ENGINEERING CO. 321-3773
205 S. Main El Dorado, Kansas 67042

SCALE: AS NOTED
DATE: 05/30/02
PROJECT NO. 6234
DRAWN BY: RM
REVISED BY: GE

ENTERPRISE SCHOOL STORM SEWER

PLAN AND PROFILE

FILE: MS-6234
Plnview A

03 03 Jf 8f