STORMWATER SEWER IMPROVEMENTS

to serve

BROOKS - BUCKNER ADDITION

LOT 1

CITY OF WICHITA, KANSAS

Michael E. Lindebak, P.E. City Engineer

Private Project Number

1260 PPS (607861)

AUGUST 2002

GENERAL NOTES:

1. Contractor will be required to provide notice to utility companies a minimum of twenty-four (24) hours prior to any excavation, as follows:

   Kansas One-Call 687-2470

   The Contractor must notify the following in case of an emergency:

Cox Communications	262-4270
Kansas Gas Service	1-888-482-4950
Westar Energy	383-8650
Aquila Energy	1-888-482-4950
Southwestern Bell	268-2245
City of Wichita Water Dept.	268-4563
City of Wichita Sewer Maint.	268-4024
City of Wichita Storm Sewer Maint.	268-4090
City of Wichita Traffic Maint.	268-4034
Conoco Pipeline Co.	1-800-231-2551
Williams Pipeline Co.	529-6600
Phillips Pipeline Co.	1-800-766-8230

2. Underground utility service lines and overhead utility pole lines are to be adjusted as necessary by others prior to construction unless the plans specifically call for their adjustment by the Contractor or unless the plans specifically identify a utility to be adjusted by its owner during construction. Existing utilities and their location, as shown on the plans, represent the best information obtainable for design. The Contractor will be required to work around existing utilities within the right-of-way which do not conflict with proposed construction.
3. Trees and shrubs in public right-of-way which are in direct conflict with proposed new construction shall be removed by the Contractor with the Engineer's approval. Trees and shrubs which are not in direct conflict with proposed new construction shall be saved and protected from damage.
4. All disturbed areas not intended for pavement or sidewalk construction shall be seeded with Kansas Premium Fescue Blend at a rate of 8 lb./1000 Sq. Ft., fertilized with a 16-20-6 ratio at a rate of 4 lb./1000 Sq. Ft., and mulched with Prairie Hay at a rate of 92 lb./1000 Sq. Ft. Mulch shall be "patted" with forks or punched into soil to reduce loss due to wind.
5. Contractor shall not start work on the project until the project inspector is assigned to the project and is present on the site. Any work done without inspection will be required to be uncovered for inspection.
6. Rubble from the removal of miscellaneous structures and excess excavation which is to be wasted shall be disposed of on sites to be provided by the Contractor. These sites shall be approved by the Engineer as to suitability, appearance and site location. Locations that, in the opinion of the Engineer, will leave an unsightly appearance will not be approved.
6. Contractor shall Coordinate With USD 259 & Buckner Elem. School General Contractor on the Relocation of the Existing Fiber Optic Between Buckner & Brooks.
7. Contractor shall not start work on the project until all necessary bonds and permits have been obtained.

APPROVED AS NOTED
BY CITY ENGINEER OF WICHITA

Storm Sewers VRH 10/1/02

NOTE TO CONTRACTORS

Installation, inspection and testing for this project is to be provided by a Licensed Consulting Engineering Firm under contract with the Owner/Developer. Said inspection to be in accordance with the City of Wichita standard construction engineering practices and certified by a Licensed Professional Engineer. No work shall be performed in dedicated easements or public right-of-way by the Contractor without such inspection nor shall any work be commenced without written authorization by the City Engineer. All Construction and Materials shall comply with the City of Wichita Specifications and Standards (on file and available in the City Engineer's Office).

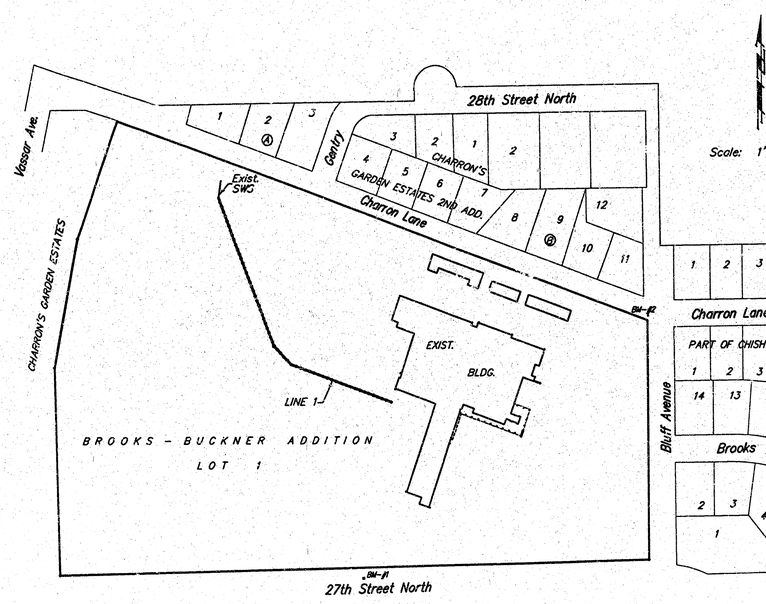

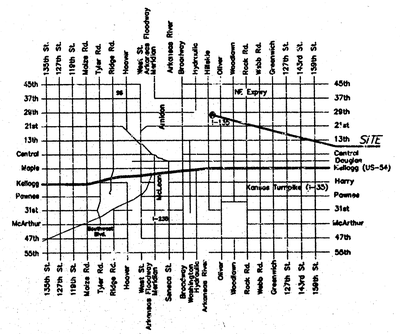

Vicinity Map

Sheet Index

Title Sheet	1
Plan/Profile	2-3
Drop Inlet Detail	4
Manhole Detail	5
Copy of Plat	6

Benchmarks

BM #1 "□" top of curb on north side of 27th Street North 137.7 feet east of light pole at Gentry Drive and 27th Street North.
ELEVATION = 173.72(CITY DATUM)

BM #2 "□" on top of curb 10.4' north of the northeast corner of subject property.
ELEVATION = 156.21(CITY DATUM)

LEE M. ULLIA LICENSED 17034 8/29/02 KANSAS PROFESSIONAL ENGINEER

As Built 2/03 KK 08/29/2002

BAUGHMAN COMPANY P.A.
ENGINEERING, SURVEYING, & PLANNING
316-262-7271 • 315 ELLIS • WICHITA, KANSAS 67211

J:\ENG\BrooksMiddle\SWSCOV.DWG-SCL

18 15 01 06

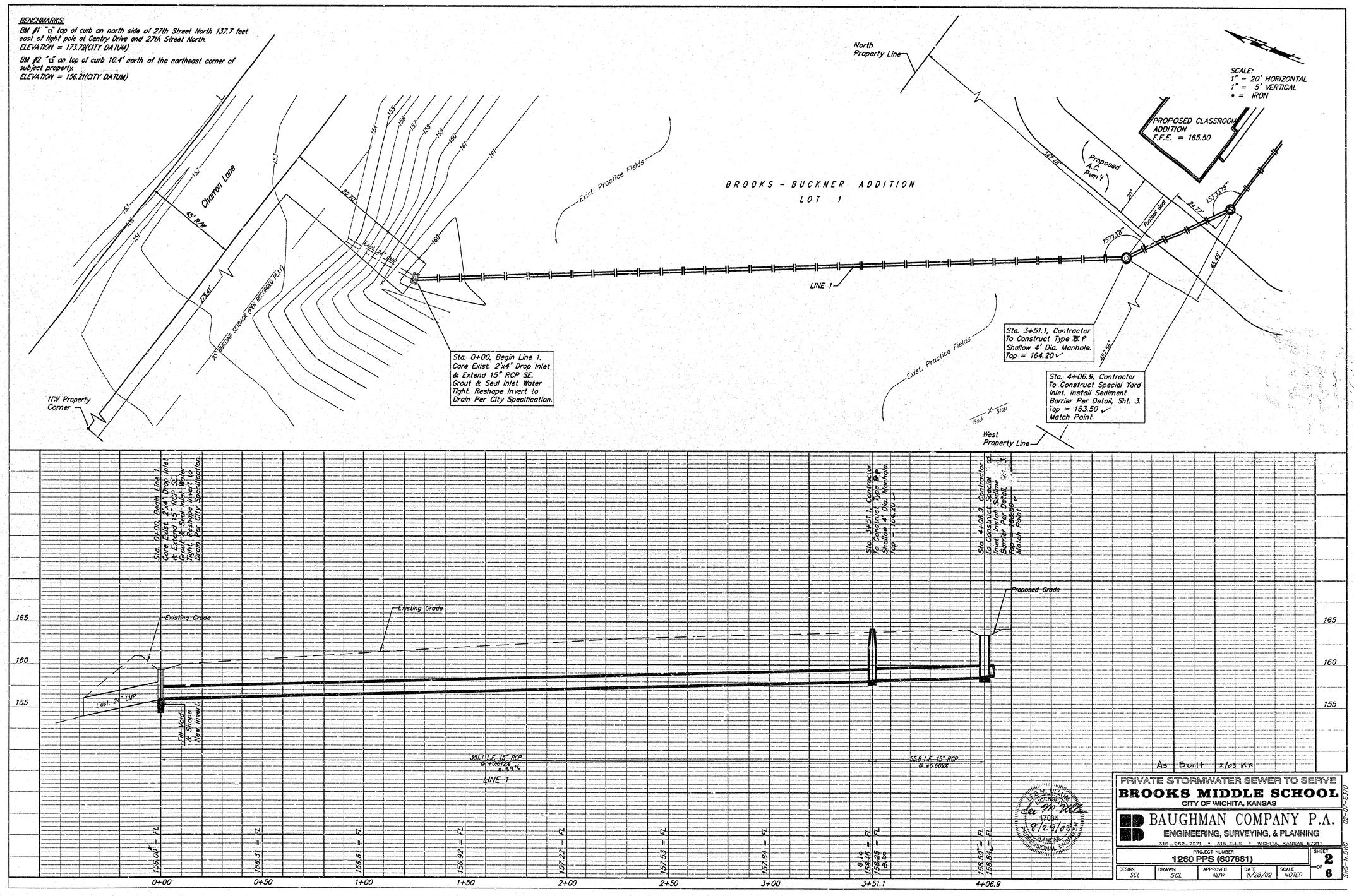

As Built 2/03 KK

PRIVATE STORMWATER SEWER TO SERVE
BROOKS MIDDLE SCHOOL
CITY OF WICHITA, KANSAS

BAUGHMAN COMPANY P.A.
ENGINEERING, SURVEYING, & PLANNING
316-262-7271 • 315 ELLIS • WICHITA, KANSAS 67211

PROJECT NUMBER					SHEET
1260 PPS (607861)					2 OF 6
DESIGN SCL	DRAWN SCL	APPROVED NBW	DATE 8/28/02	SCALE NOTED	

02-07-E370
SWS-1r.DWG

BENCHMARKS:

BM #1 "cl" top of curb on north side of 27th Street North 137.7 feet east of light pole at Gentry Drive and 27th Street North.
ELEVATION = 173.72(CITY DATUM)

BM #2 "cl" on top of curb 10.4' north of the northeast corner of subject property.
ELEVATION = 156.21(CITY DATUM)

BROOKS - BUCKNER ADDITION

LOT 1

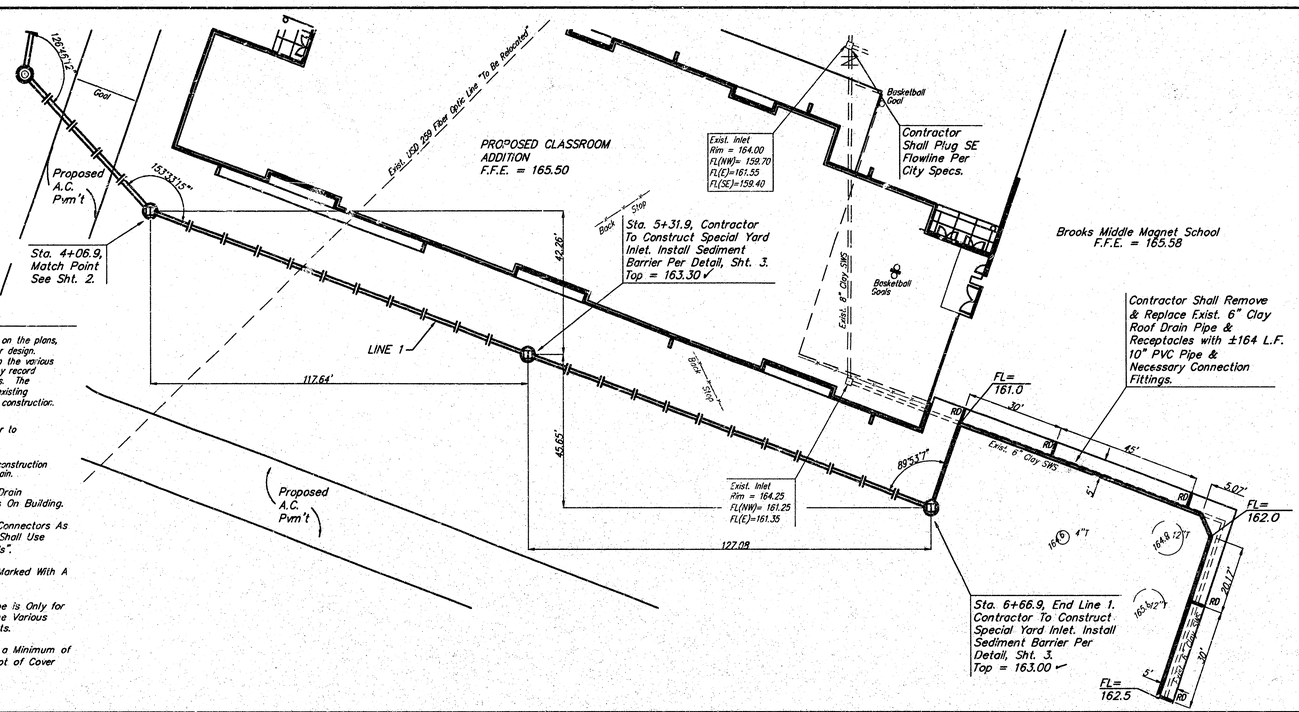

SCALE:
1" = 20' HORIZONTAL
1" = 5' VERTICAL
• = IRON

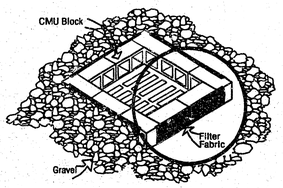

NOTES:

Frequent maintenance is required to minimize short-circuiting and to remove sediment deposits and buildup.

Wrap filter fabric around all CMU block and backfill with 2"-3" gravel rock to allow sediment deposits.

DO NOT cover inlet or grate with filter fabric.

INLET PROTECTION

Storm Drain with Gravel Apron

ROOF DRAIN NOTES:

1. *Exist. utilities and their locations, as shown on the plans, represent the best information obtainable for design. Location information has been obtained from the various utility companies and is either from company record drawings or company-provided field locations. The Contractor will be required to work around existing utilities which do not conflict with proposed construction.*
2. *The Contractor to verify utility locations prior to construction of this project.*
3. *All trees and shrubs in direct conflict with construction shall be removed, unless denoted as to remain.*
4. *General Contractor To Complete Roof Drain Receptacle Connections To Roof Drains On Building.*
5. *Roof Drain Receptacles Shall Be PVC Connectors As Necessary For Installation. Contractor Shall Use "Tee's", "Wye's", "Reducers" And "Bends".*
6. *All Receptacles Shall Be Capped And Marked With A Stake.*
7. *The Lengths Given for the 10" PVC Pipe is Only for the Main Line and Does Not Include the Various Pipe Connections form the Down Spouts.*
8. *All Roof Drains Pipes Shall be Ran at a Minimum of +1.00% and Shall Have at Least 1' Foot of Cover Except Under Pavement.*

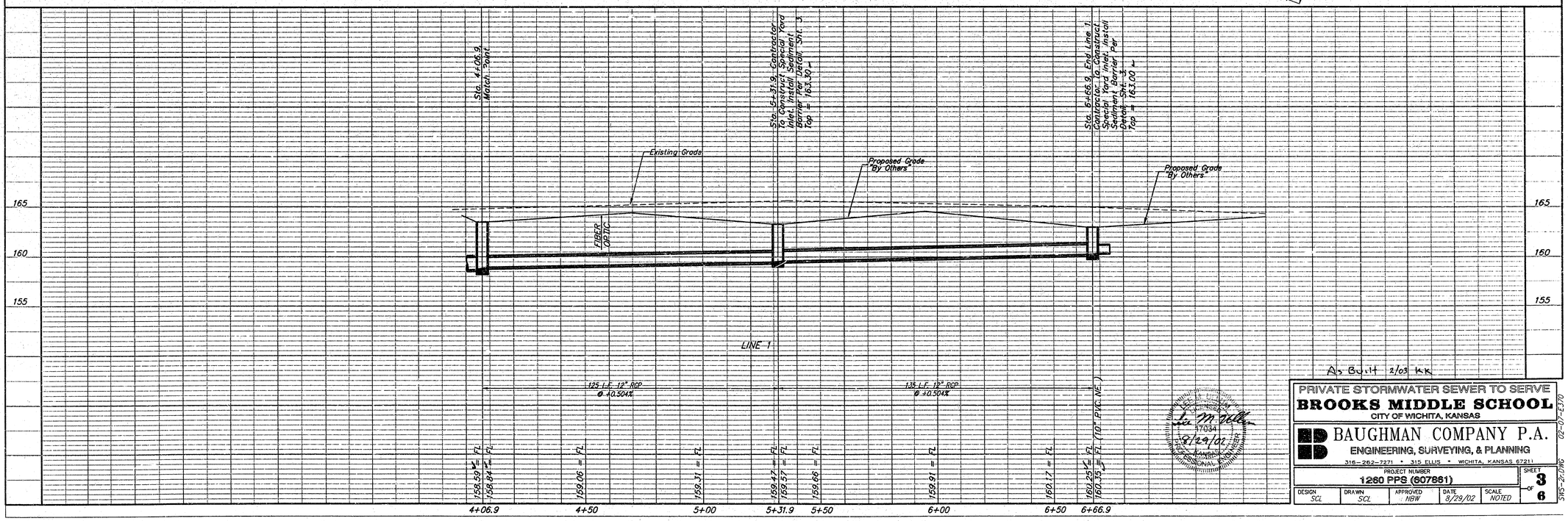

As Built 2/03 KK

PRIVATE STORMWATER SEWER TO SERVE
BROOKS MIDDLE SCHOOL
CITY OF WICHITA, KANSAS

BAUGHMAN COMPANY P.A.
ENGINEERING, SURVEYING, & PLANNING
316-262-7271 • 315 ELLIS • WICHITA, KANSAS 67211

PROJECT NUMBER 1260 PPS (607861)

DESIGN	DRAWN	APPROVED	DATE	SCALE	SHEET
SCL	SCL	NBW	8/29/02	NOTED	3 of 6

SHS-2-DWG 02-07-E370

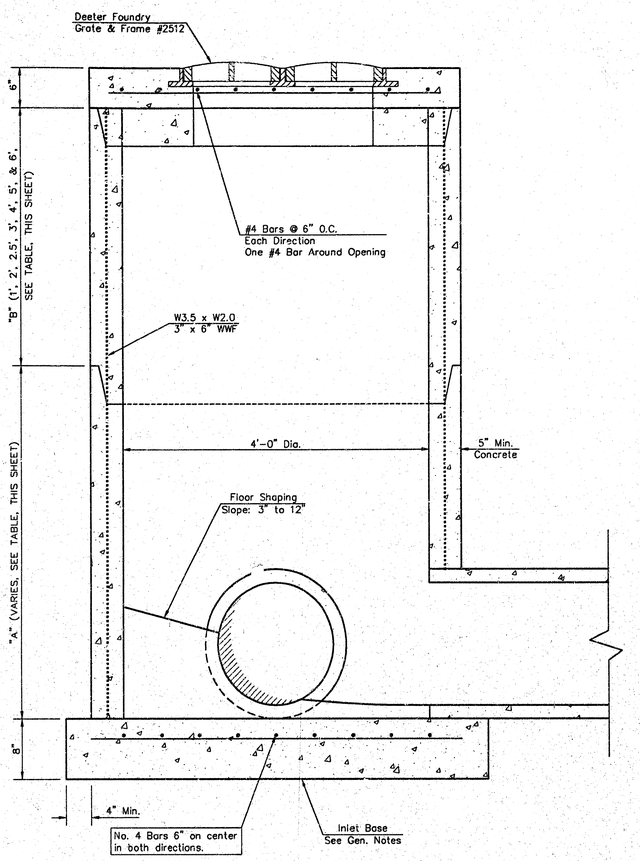

YARD INLET

LINE #	STA.	TOP OF INLET	INLET FLOW	"A"	"B"
1	4+06.9	163.50	158.59	4.30'	–
1	5+31.9	163.20	159.47	3.52'	–
1	6+66.9	163.00	160.25	2.25'	–

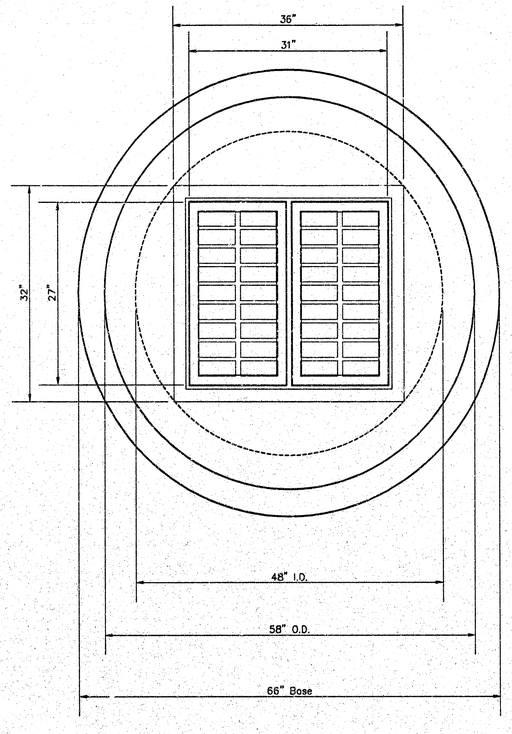

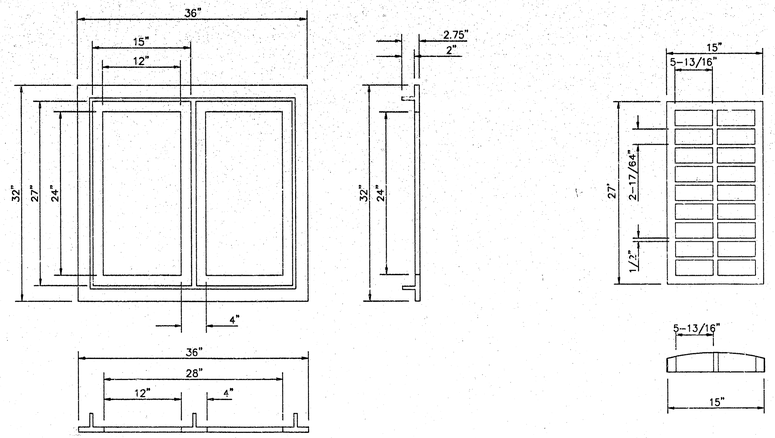

DEETER #2512 CATCH BASIN INLET GRATE & FRAME

GENERAL NOTES

1. Mortar used in masonry construction shall contain 8 sacks of cement per cubic yard. Concrete used in yard inlet bases shall conform to the requirements of concrete for concrete pavement construction as specified in the city standard paving specifications using city concrete cement mix without air entraining.
2. Reinforcing steel shall be installed in the yard inlet bases and shall consist of no. 4 bars placed on 6" centers in both directions. The yard inlet base reinforcement shall be placed 6" above the bottom of the yard inlet base. All costs for furnishing and installing reinforcing steel shall be included in the unit price bid for the yard inlet.
3. The floors of all yard inlet shall be shaped with flow channels such that the inlets will be self cleaning and free of areas where solids could be deposited. Flow channels shall be formed to match the bottom halves of the inflowing pipes and the outflowing pipe as shown by the drawings. Inlet floors shall have slopes of 3 inches per foot in the areas outside of the flow channels sloped toward the flow channels. Pipes laid through inlets shall have the top half removed to neat lines for the full inside diameter of the inlet. Inlet floors shall then be shaped around the bottom half of the pipe which forms the flow channel.
4. Pipes installed within the excavation made for the inlet shall be cradled with concrete to the limits of the inlet excavation. When clay pipe is used, the cradle shall extend to the first joint outside the inlet. The cradle shall be terminated at the clay pipe joint in a manner which will maintain the flexibility of the joint. Cost of cradle within inlet excavation or to clay pipe joints adjacent to inlet shall be included in the unit price bid for the inlet.
5. Inlet grate castings and inlet frame castings shall conform to the requirements as indicated in the standard specifications and as shown in the standard detail drawing.
6. The crowns of inflowing pipes shall never be set lower than the crown of the outflowing pipe.
7. Joints between inlet sections to be sealed with two two wraps of extruded butyl rubber joint mastic meeting City of Wichita Type "P" Manhole Specifications.
8. Special yard inlet shall be paid for at the unit price bid per each. All standard yard inlet diameters will be 4'.

SPECIAL YARD INLET

WICHITA, KANSAS

BAUGHMAN COMPANY P.A.
ENGINEERING, SURVEYING, & PLANNING
316-262-7271 • 315 ELLIS • WICHITA, KANSAS 67211

PROJECT NUMBER	SHEET
1260 PPS (607861)	4 OF 6

DESIGN	DRAWN	APPROVED	DATE	SCALE
			12/18/98	NONE

Ya dinet

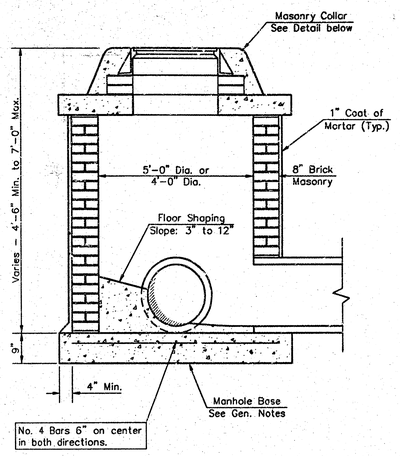

SHALLOW TYPE "A" MANHOLE

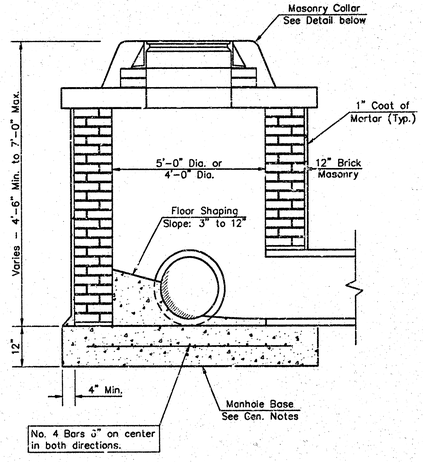

SHALLOW TYPE "B" MANHOLE

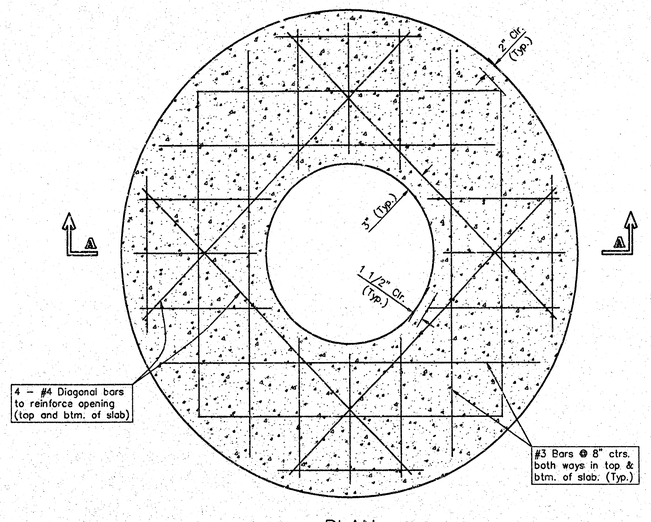

PLAN

GENERAL NOTES

1. Mortar used in masonry construction shall contain 8 sacks of cement per cubic yard. Concrete used in manhole bases shall conform to the requirements of concrete for concrete pavement construction as specified in the city standard paving specifications using city concrete cement mix without air entraining admixture. Mortar shall be placed around the manhole ring as shown on the drawings when manholes are constructed in unpaved areas. Type "A" shallow manholes can be used on sewers when the manhole is not located within public street pavement. Manholes constructed where pipe sizes are smaller than 24" shall have an inside diameter of 4'. Manholes constructed where pipe sizes are 24" or larger shall have an inside diameter of 5'. Completed manhole shall be without leaks and water tight.

2. Reinforcing steel shall be installed in the manhole bases and shall consist of no. 4 bars placed on 6" centers in both directions. The manhole base reinforcement shall be placed 6" above the bottom of the manhole base. All costs for furnishing and installing reinforcing steel shall be included in the unit price bid for the manhole.

3. The floors of all manholes shall be shaped with flow channels such that the manholes will be self cleaning and free of areas where solids could be deposited as sewage flows through the manhole from all inlet pipes to the outlet pipe. Flow channels shall be formed to match the bottom halves of the inflowing pipes and the outflowing pipe as shown by the drawings. Manhole floors shall have slopes of 3 inches per foot in the areas outside of the flow channels sloped toward the flow channels. Pipes laid through manholes shall have the top half removed to neat lines for the full inside diameter of the manhole. Manhole floors shall then be shaped around the bottom half of the pipe which forms the flow channel.

4. Pipes installed within the excavation made for the manhole shall be cradled with concrete to the limits of the manhole excavation. When clay pipe is used, the cradle shall extend to the first joint outside the manhole. The cradle shall be terminated at the clay pipe joint in a manner which will maintain the flexibility of the joint. Cost of cradle within manhole excavation or to clay pipe joints adjacent to manhole shall be included in the unit price bid for the manhole.

5. Manhole cover castings and manhole frame castings shall conform to the requirements as indicated in the standard specifications and as shown in the standard detail drawings.

6. The crowns of inflowing pipes shall never be set lower than the crown of the outflowing pipe.

7. Standard shallow manholes type "A" and "B" shall be paid for at the unit price bid per each for the type and diameter indicated. Standard special shallow manholes type "A" and "B" shall be paid for at the unit price bid per each for the type indicated. All standard shallow manhole diameters will be 4' unless indicated otherwise.

8. All brick used in manhole construction shall meet Grade SW of ASTM C652 or C62-87.

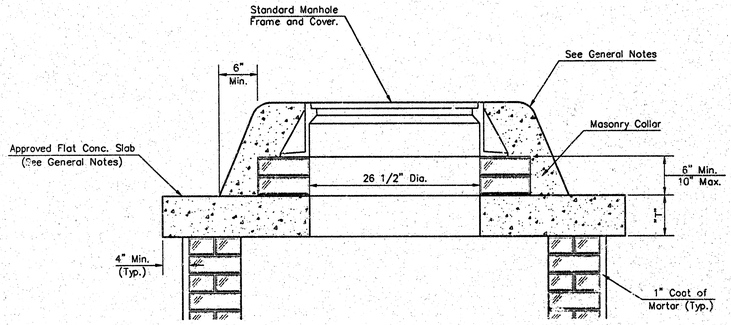

MASONRY COLLAR DETAIL

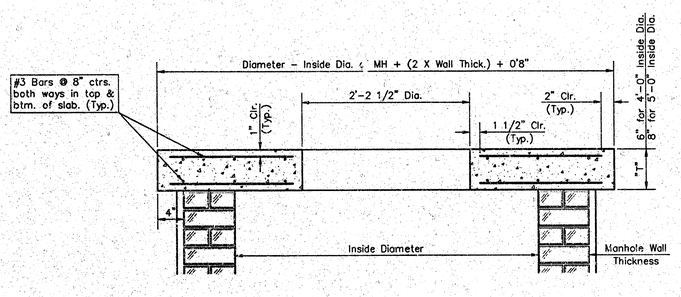

SECTION A-A

FLAT CONCRETE SLAB DETAILS

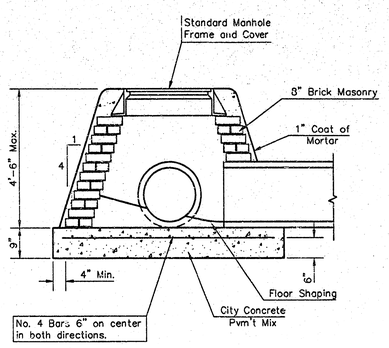

SPECIAL SHALLOW TYPE "A" MANHOLE

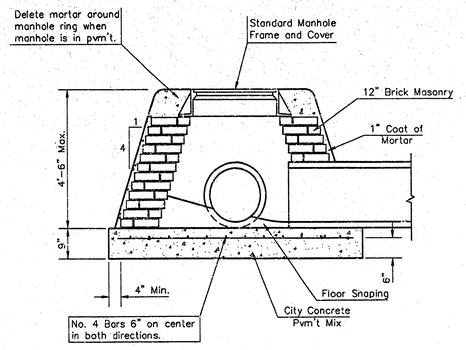

SPECIAL SHALLOW TYPE "B" MANHOLE

CITY OF WICHITA, KANSAS

Std. Manhole Detail

TYPE "A" AND TYPE "B"

BAUGHMAN COMPANY P.A.
ENGINEERING, SURVEYING, & PLANNING
316-262-7271 • 315 ELLIS • WICHITA, KANSAS 67211

PROJECT NUMBER				SHEET
1260 PPS (607861)				5 OF 6
DESIGN	DRAWN	APPROVED	DATE	SCALE
C.O.W.	Staff			NONE

BROOKS - BUCKNER ADDITION

TO WICHITA, SEDGWICK COUNTY, KANSAS

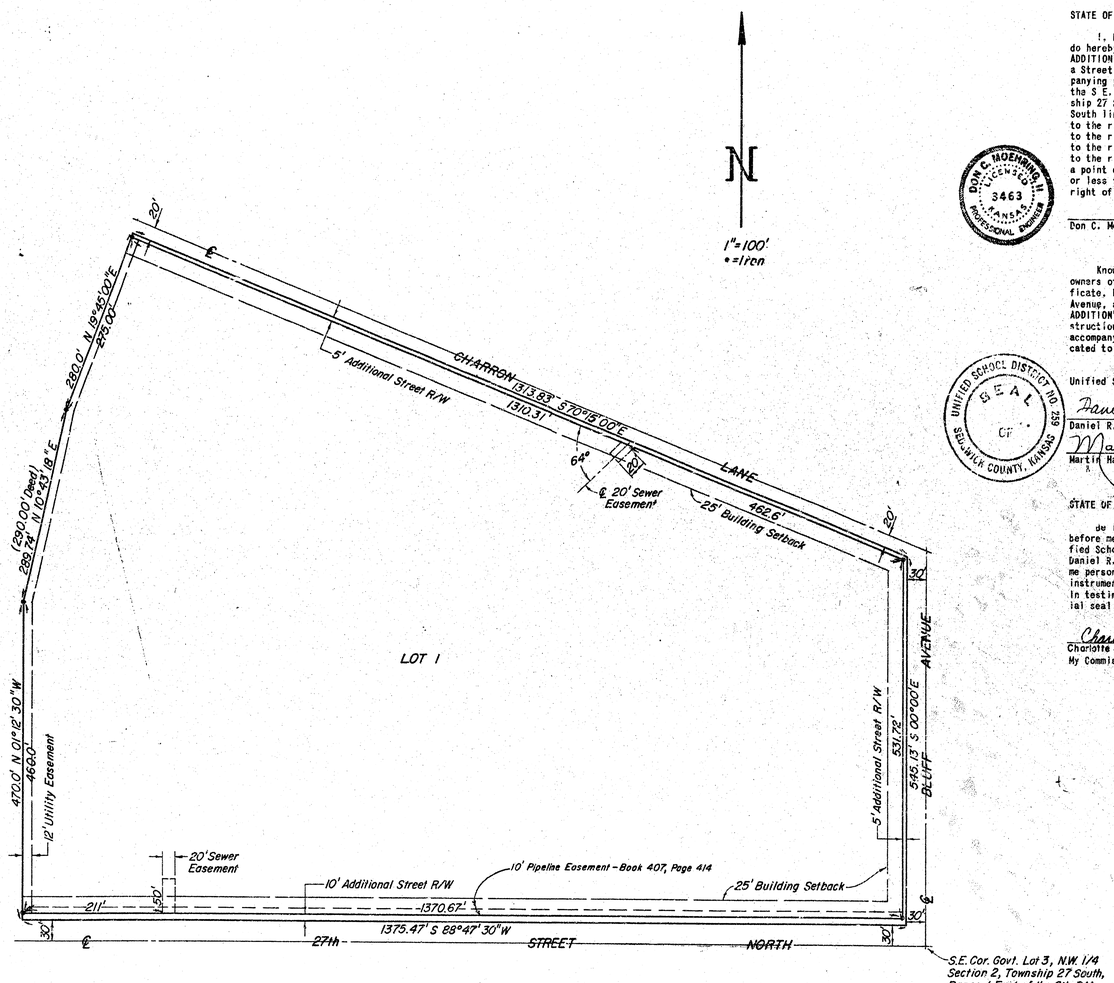

STATE OF KANSAS, COUNTY OF SEDGWICK, SS:

I, Don C. Moehring II, a Civil Engineer in said State and County, do hereby certify that I have surveyed and platted "BROOKS-BUCKNER ADDITION" to Wichita, Sedgwick County, Kansas, into a Lot, an Avenue, a Street and a Lane, the same being accurately set forth on the accompanying plat and described as follows: A tract of land beginning at the S E. corner of Government Lot 3 in the N.W.¼ of Section 2, Township 27 South, Range 1 East of the 6th P.M.; thence West along the South line of Government Lots 3 and 4, 1405 feet; thence with an angle to the right of 90°00' for a distance of 500 feet; thence with an angle to the right of 12°00' for a distance of 290 feet; thence with an angle to the right of 09°00' for a distance of 280 feet; thence with an angle to the right of 90°00' for a distance of 1385.6 feet more or less to a point on the East line of said Lot 3; thence South 563.1 feet more or less to the place of beginning, except that part acquired for street right of way.

DON C. MOEHRING II LICENSED 3463 KANSAS PROFESSIONAL ENGINEER

Don C. Moehring II — Consulting Engineer

Know all men by these presents that we the undersigned, property owners of the land as above set forth in the Civil Engineer's certificate, have caused the same to be surveyed and platted into a Lot, an Avenue, a Street and a Lane, the same to be known as "BROOKS-BUCKNER ADDITION" to Wichita, Sedgwick County, Kansas. Easements for the construction and maintenance of public utilities, as indicated on the accompanying plat, are hereby granted. The Streets are hereby dedicated to and for the use of the public.

Unified School District No. 259 (Wichita), Sedgwick County, Kansas

Daniel R. Glickman, President

Martin Hartley, Clerk-Treasurer

UNIFIED SCHOOL DISTRICT NO. 259 SEAL SEDGWICK COUNTY, KANSAS

STATE OF KANSAS, COUNTY OF SEDGWICK, SS:

Be it remembered that on this 20th day of January, 1976, before me, a Notary public in and for said State and County, came Unified School District No. 259 (Wichita), Sedgwick County, Kansas, by Daniel R. Glickman, President, and Martin Hartley, Clerk-Treasurer, to me personally known to be the same persons who executed the foregoing instrument of writing and duly acknowledged the execution of the same. In testimony whereof I have hereunto set my hand and affixed my notarial seal the day and year above written.

Charlotte Buckmaster, Notary Public

Charlotte Buckmaster

My Commission expires April 16, 1977

#388555

This plat of "BROOKS-BUCKNER ADDITION" has been submitted to and approved by the Wichita-Sedgwick County Metropolitan Area Planning Commission.
Dated this 8th day of JANUARY, 1976.

Wichita-Sedgwick County Metropolitan Area Planning Commission

David Bayouth, Chairman

Robert A. Lakin, Secretary

This plat has been approved and all dedications shown hereon, if any, accepted by the Board of County Commissioners of Sedgwick County, Kansas, this 8th day of June, 1978.

Everett Pittich, Chairman

Tom Scott, Commissioner

John Hale, Commissioner

Attest: Dorothy K. White, County Clerk

This plat has been approved and all dedications shown hereon, if any, accepted by the City Commission of the City of Wichita, Kansas, this 23rd day of May, 1978.

Dennis A. Peters, Mayor

Donald C. Glick, City Clerk

STATE OF KANSAS, COUNTY OF SEDGWICK, SS:

This is to certify that this instrument was filed for record in the Register of Deeds Office at 2:30 PM on the 9th day of JUNE, 1978.

Bette F. McCart, Register of Deeds

Pat Kettler, Deputy

Entered on transfer record this 8 day of June, 1978.

Dorothy K. White, County Clerk

20.00