SHEET NO.	TOTAL SHEETS
1	9

CITY OF WICHITA, KANSAS
MICHAEL E. LINDEBAK, P.E., CITY ENGINEER

STORM WATER ~~SEWER~~ DRAIN NO. 124
IN
PARK CHATEAU

CITY OF WICHITA PROJECT NO. 468-76-245-82636-000-000-001
INDEX NO. 750927

INDEX OF SHEETS

1. TITLE SHEET
2. PAVING DETAILS
3. 3-6'x4' RCB GENERAL NOTES
4. 3-6'x4' RCB LAYOUT
5.-9. 3-6'x4' RCB DETAILS

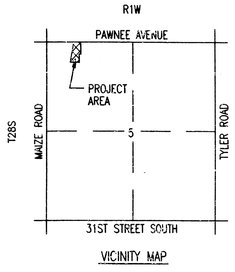

VICINITY MAP

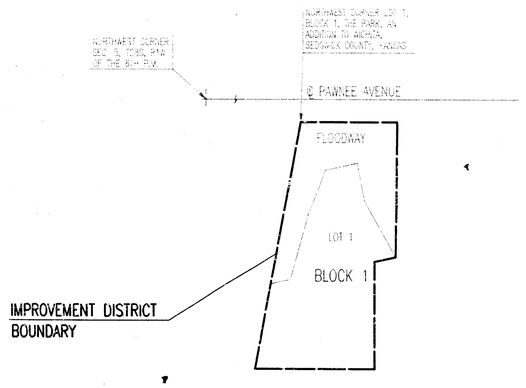

SCALE: 1" = 150'

APRIL, 1997

PLANS PREPARED BY
PROFESSIONAL ENGINEERING CONSULTANTS, P.A.
ENGINEERS
WICHITA, KANSAS

Booked 2-11-98 D-380 MCG

RICHARD A. SCHMITT LICENSED 18024 KANSAS

GENERAL NOTES

UNDERGROUND UTILITY SERVICE LINES AND OVERHEAD UTILITY POLE LINES ARE TO BE ADJUSTED AS NECESSARY BY OTHERS PRIOR TO CONSTRUCTION UNLESS THE PLANS SPECIFICALLY CALL FOR THEIR ADJUSTMENT BY THE CONTRACTOR. EXISTING UTILITIES [illegible] LOCATION, AS SHOWN ON THE PLANS, REPRESENT THE BEST INFORMA[illegible]VAILABLE FOR DESIGN. LOCATION INFORMATION HAS BEEN OBTAINED FROM [illegible] VARIOUS UTILITY COMPANIES AND IS EITHER FROM COMPANY RECORD DRAWINGS OR COMPANY PROVIDED FIELD LOCATIONS. THE CONTRACTOR WILL BE REQUIRED TO WORK AROUND EXISTING UTILITIES WITHIN THE RIGHT-OF-WAY WHICH DO NOT CONFLICT WITH PROPOSED CONSTRUCTION. CONTRACTOR SHALL SATISFY HIMSELF OF SUBSURFACE CONDITIONS PRIOR TO BIDDING.

TREES AND SHRUBS IN PUBLIC RIGHT-OF-WAY WHICH ARE IN DIRECT CONFLICT WITH PROPOSED NEW CONSTRUCTION SHALL BE REMOVED BY THE CONTRACTOR WITH THE ENGINEER'S APPROVAL. TREES AND SHRUBS WHICH ARE NOT IN DIRECT CONFLICT WITH PROPOSED NEW CONSTRUCTION SHALL BE SAVED AND PROTECTED FROM DAMAGE.

RUBBLE FROM THE REMOVAL OF MISCELLANEOUS STRUCTURES SHALL BE DISPOSED OF ON SITES TO BE PROVIDED BY THE CONTRACTOR AND APPROVED AS NOTED.

ALL DISPOSAL SITES MUST BE APPROVED BY THE KANSAS DEPARTMENT OF HEALTH AND ENVIRONMENT. MATERIAL EITHER STOCKPILED OR DISPOSED OF IN A FLOOD PLAIN WOULD REQUIRE A KANSAS STATE BOARD OF AGRICULTURE PERMIT. ANY MATERIAL DUMPED IN WATERS OF THE UNITED STATES OR WETLANDS IS SUBJECT TO U.S. CORPS OF ENGINEERS PERMITTING REGULATIONS. ANY MATERIAL BURIED OR STOCKPILED BEYOND APPROVED CONSTRUCTION LIMITS WOULD REQUIRE ADDITIONAL ARCHOLOGICAL INVESTIGATIONS UNLESS BURIED IN A PREVIOUSLY APPROVED BORROW LOCATION.

EXCESS EXCAVATED MATERIAL AND EXCESS TOPSOIL SHALL BE STOCKPILED OR WASTED WITHIN THE PLAT LIMITS. THE CONTRACTOR SHALL CONTACT THE OWNER'S ENGINEER AT 262-2691 FOR INFORMATION PERTAINING TO THE ACCEPTABLE LOCATIONS FOR THE DISPOSITION OF EXCESS MATERIAL. WASTE MATERIAL SHALL BE GRADED SMOOTH AND SLOPED TO DRAIN. THIS WORK SHALL BE CONSIDERED SUBSIDIARY TO OTHER BID ITEMS.

CONTRACTOR SHALL PROVIDE A MINIMUM FORTY-EIGHT (48) HOUR ADVANCE NOTICE (EXCLUDING WEEKENDS AND HOLIDAYS) PRIOR TO BEGINNING ANY EXCAVATION, TO KANSAS ONE-CALL SYSTEM, A UTILITY LOCATION SERVICE, AT (316) 687-2470 TO REQUEST THE FOLLOWING UTILITY COMPANIES TO LOCATE ALL EXISTING LINES WITHIN THE PROJECT AREA: K.G.&E. GAS, PEOPLES NATURAL GAS, K.G.&E. ELECTRIC, SOUTHWESTERN BELL TELEPHONE, MULTIMEDIA CABLEVISION, CITY OF WICHITA SEWER MAINTENANCE AND CITY OF WICHITA WATER DEPARTMENT.

THE CONTRACTOR SHALL BE RESPONSIBLE FOR PRESERVING PROPERTY IRONS. THE CONTRACTOR WILL BE REQUIRED TO RE-ESTABLISH ANY PROPERTY IRONS WHICH ARE DAMAGED OR DESTROYED BY HIS CONSTRUCTION OPERATIONS. SUCH IRONS SHALL BE RE-ESTABLISHED BY A LICENSED LAND SURVEYOR IN ACCORDANCE WITH STATE LAWS.

THE WATER DEPARTMENT SHALL FIELD LOCATE WATER VALVES ONE TIME DURING CONSTRUCTION WHEN REQUESTED BY THE CONTRACTOR. IT SHALL BE THE CONTRACTOR'S RESPONSIBILITY TO PRESERVE SUCH FIELD LOCATIONS DURING THE CONSTRUCTION PROCESS. WATER VALVES, WATER VALVE BOXES OR FIRE HYDRANTS DAMAGED DURING CONSTRUCTION SHALL BE REPAIRED BY THE CONTRACTOR AT HIS OWN EXPENSE.

THE CONTRACTOR SHALL ADJUST WATER VALVE BOXES AS DIRECTED BY THE ENGINEER. THIS WORK TO BE SUBSIDIARY TO OTHER BID ITEMS.

ALL AREAS DISTURBED DURING CONNSTRUCTION SHALL BE SEEDED, FERTILIZED, AND MULCHED ACCORDING TO CITY OF WICHITA STANDARDS AND SPECIFICATIONS.

ENGINEERING 04-01-1997 11:34:05 am

SHEET NO.	TOTAL SHEETS
2	9

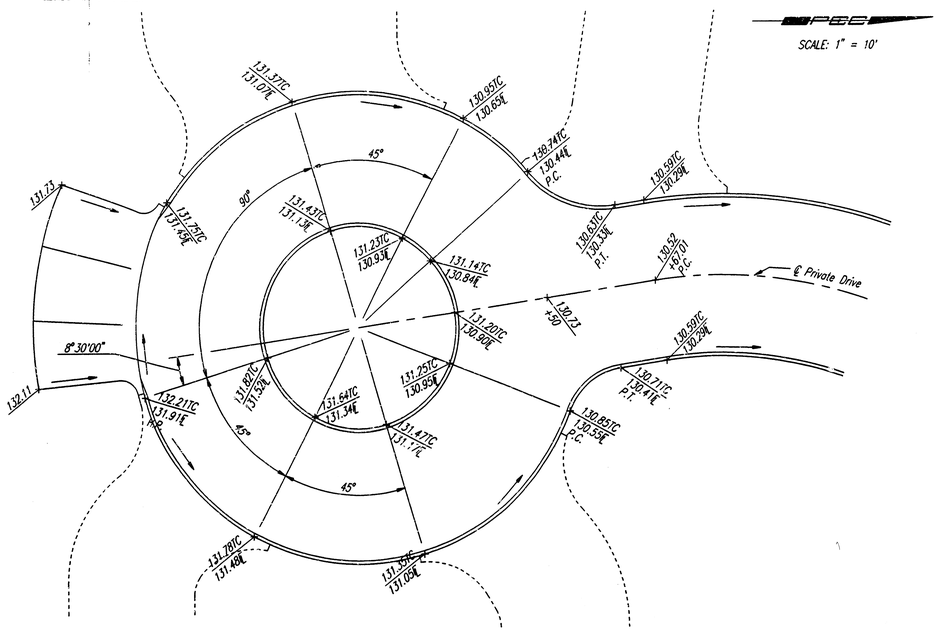

CUL-DE-SAC DETAIL

Note: Center of cul-de-sac = Sta. 4+20.36, Private Road

ROLL TYPE COMBINED CURB AND GUTTER

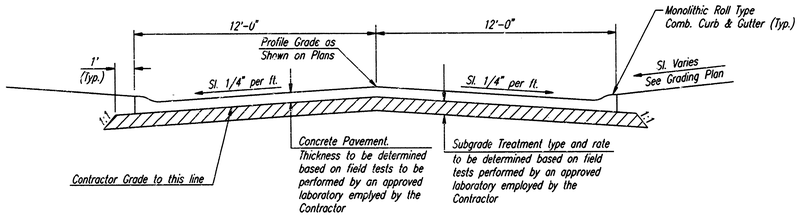

TYPICAL SECTION

PRIVATE DRIVE

(Provided to facilitate grading in RCB area)

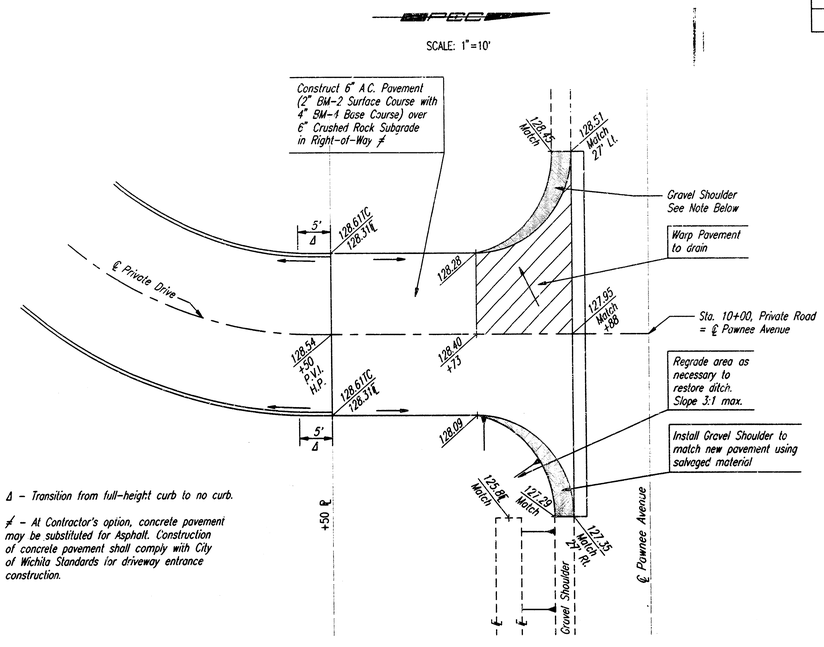

Δ – Transition from full-height curb to no curb.

≠ – At Contractor's option, concrete pavement may be substituted for Asphalt. Construction of concrete pavement shall comply with City of Wichita Standards for driveway entrance construction.

INTERSECTION DETAIL

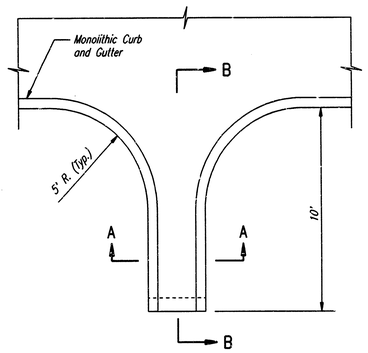

PLAN

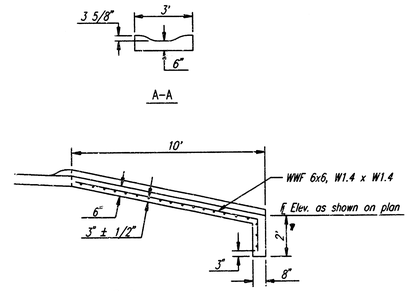

FLUME INLET DETAILS

FOR INFORMATION ONLY

PARK CHATEAU

PAVING DETAILS

PROJECT NO. 468-82636 — SEDGWICK COUNTY

PROFESSIONAL ENGINEERING CONSULTANTS, P.A.
ENGINEERS
WICHITA, KANSAS

Designed by	MWB, DAP	Checked by	DAR	
Drawn by	DEP	Date	APR., 1997	Job No. 96266-1

DSNR: RAS OPER: DEP SCALE: 1=10.00
Q:\1996\96266\DETAILS.DWG 04-01-1997 3:42:14 pm

SHEET NO.	TOTAL SHEETS
3	9

GENERAL NOTES

LOADING:
HS20-44 — AASHTO Specifications 1992 Edition and latest Interim Specifications.

UNIT STRESSES:

Class AAA Concrete f'c = 4,000 psi fc = 1,600 psi
Reinforcing Steel (Grade 60) fy = 60,000 psi fs = 24,000 psi

CONSTRUCTION: The Contractor has the option of constructing either the Precast option (see Detail B, this sheet) or the Cast-In-Place option (see Detail A, this sheet.) Payment for the structure will be the same regardless of which option is used for construction.

CONCRETE: Class AAA Concrete shall be used throughout for the Cast-In-Place and shall comply to Section 402 of the 1990 Kansas State Department of Transportation Standard Specifications for State Road and Bridge Construction. Bevel all exposed edges with a 3/4 inch triangular moulding, unless otherwise noted.

PRECAST CONCRETE: Precast Box Sections shall meet the appropriate design and inspection requirements of AASHTO M 273, and A.S.T.M. Designation C-850, Table 2 and the loading specifications. (Depth of fill is less than 2 ft.)

The intermediate joints shall be sealed with a mastic compound which shall be provided for approval with the shop detail submittal. The Contractor shall furnish, to the Engineer, detail plans and shop drawings showing the proposed Precast layout and all other details for manufacture and delivery of any Precast items to be incorporated in the work.

SEAL COURSE: A Seal Course shall be constructed below the R.C.B. as shown in the plans. The seal course shall consist of 3" of Class A Concrete below all Cast-In-Place Concrete. The seal course below Precast sections shall consist of either 3" of Class A Concrete or a 6" Granular Base (Type BD-1 or UD-1) at the Contractor's option. No reinforcing shall be placed until the seal course has gained sufficient strength to permit working upon it without injury.

REINFORCING STEEL: All dimensions relative to reinforcing steel placement are to the centerline of bars unless otherwise noted. Bar bending and dimensions shall be as shown and noted on the bending diagrams. All reinforcing steel shall conform to the requirements of ASTM A615, Grade 60.

JOINTS: Construction joints shall only be formed at locations shown or as approved by the Engineer.

EXCAVATION: All excavation and backfill shall extend to two (2) feet beyond sides of box and wingwall.

PROJECT SCOPE: City of Wichita Project No. 468-82636 will be limited to the construction of the 3-6'x4' R.C. Box, limited channel shaping and fill plus compaction (90% Standard Density) in a band 40' along ℄ Park Chateau (Sta. 8+67 to 9+07) to the contractor's grading limits, 26' plus in width, as denoted in the typical sections. Paving, curb and gutter and slope drains are by others.

BASIS OF PAYMENT

The "3-6'x4' R.C.Box" shall be bid as a lump sum which shall include all labor, material, excavation, compaction, concrete, reinforcing steel, seal course, and all other incidentials necessary to complete the work. Quantities shown are for information only.

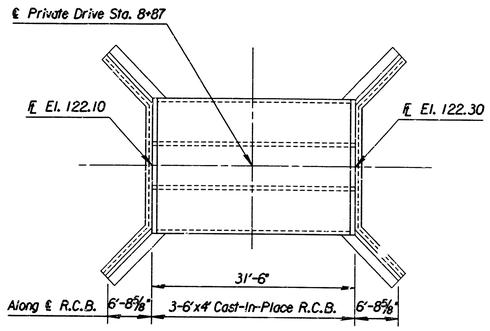

DETAIL A
(Cast-In-Place Option)
Scale: 1"=10'

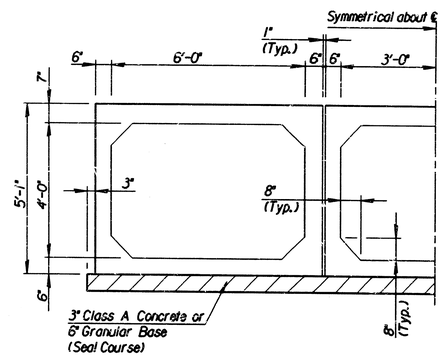

SECTION A-A
Precast

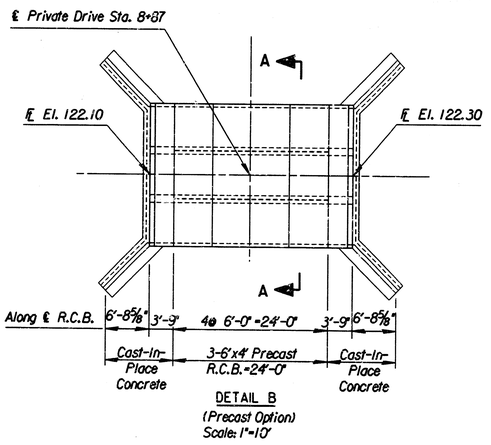

DETAIL B
(Precast Option)
Scale: 1"=10'

"3-6'x4' R.C. BOX"	
✱ BILL OF MATERIALS (CAST-IN-PLACE)	
Class AAA Concrete	54.5 C.Y.
Reinforced Steel (Grade 60)	8560 Lbs.
SealCourse (Class A Concrete)	7.2 C.Y.
✱ BILL OF MATERIALS (PRECAST OPTION)	
Class AAA Concrete	22.6 C.Y.
Reinforced Steel (Grade 60)	2700 Lbs.
Precast Box (6'x4')	72 L.F.
† SealCourse (Class A Concrete)	7.2 C.Y.
† SealCourse (Granular Base)	14.4 C.Y.

✱ For Information Only
† Choose only one option

No.	Revisions	By	Date
1			

PARK CHATEAU

3-6'x4'x31'-6" R.C.B. GENERAL NOTES

PROJECT NO. 468-82636 SEDGWICK COUNTY

PROFESSIONAL ENGINEERING CONSULTANTS, P.A.
ENGINEERS
WICHITA, KANSAS

Designed by	RWA	Checked by	RAS
Drawn by	MAF	Date Mar. 1997	Job No. 96266-1

I:/1996/96266/001/gennotes.dgn
Drawn by: maf
Plotted by: ras 3-15-97

SHEET NO.	TOTAL SHEETS
4	9

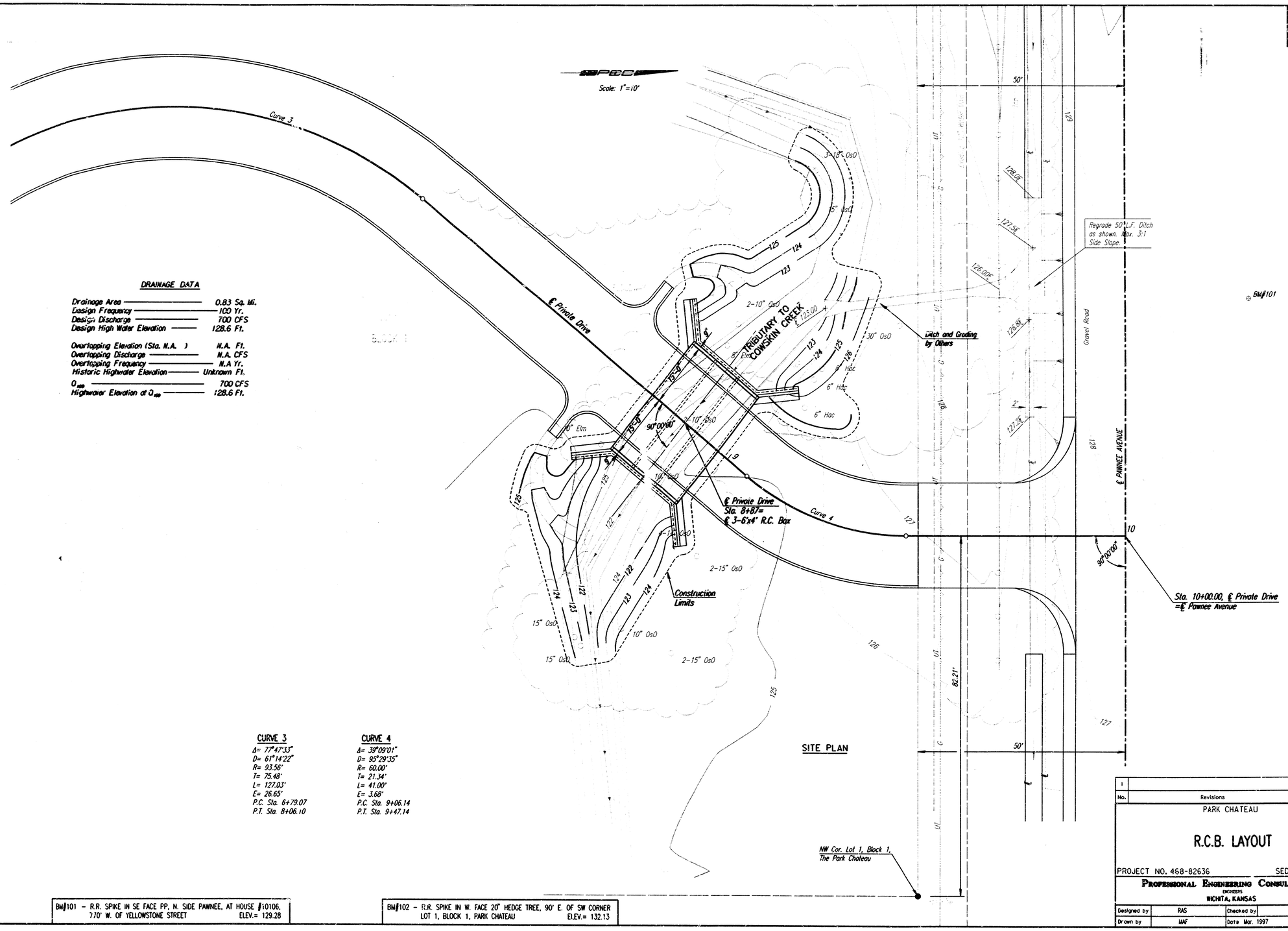

SITE PLAN

DRAINAGE DATA

Drainage Area	0.83 Sq. Mi.
Design Frequency	100 Yr.
Design Discharge	700 CFS
Design High Water Elevation	128.6 Ft.
Overtopping Elevation (Sta. N.A.)	N.A. Ft.
Overtopping Discharge	N.A. CFS
Overtopping Frequency	N.A Yr.
Historic Highwater Elevation	Unknown Ft.
Q_{100}	700 CFS
Highwater Elevation at Q_{100}	128.6 Ft.

CURVE 3
Δ= 77°47'33"
D= 61°14'22"
R= 93.56'
T= 75.48'
L= 127.03'
E= 26.65'
P.C. Sta. 6+79.07
P.T. Sta. 8+06.10

CURVE 4
Δ= 39°09'01"
D= 95°29'35"
R= 60.00'
T= 21.34'
L= 41.00'
E= 3.68'
P.C. Sta. 9+06.14
P.T. Sta. 9+47.14

BM#101 – R.R. SPIKE IN SE FACE PP, N. SIDE PAWNEE, AT HOUSE #10106, 770' W. OF YELLOWSTONE STREET ELEV.= 129.28

BM#102 – R.R. SPIKE IN W. FACE 20" HEDGE TREE, 90' E. OF SW CORNER LOT 1, BLOCK 1, PARK CHATEAU ELEV.= 132.13

No.	Revisions	By	Date
1			

PARK CHATEAU

R.C.B. LAYOUT

PROJECT NO. 468-82636 SEDGWICK COUNTY

PROFESSIONAL ENGINEERING CONSULTANTS, P.A.
ENGINEERS
WICHITA, KANSAS

Designed by	RAS	Checked by	RAS
Drawn by	MAF	Date Mar. 1997	Job No. 96266-1

1:/1996/96266/001/gradplan.dgn
Drawn by: dsp/maf
Plotted by: ras 3-15-97

PROJECT NO.	YEAR	SHEET NO.	TOTAL SHEETS
68-82636	19 97	5	9

VERSION: 5.1.0 COMPILED: 03/01/95

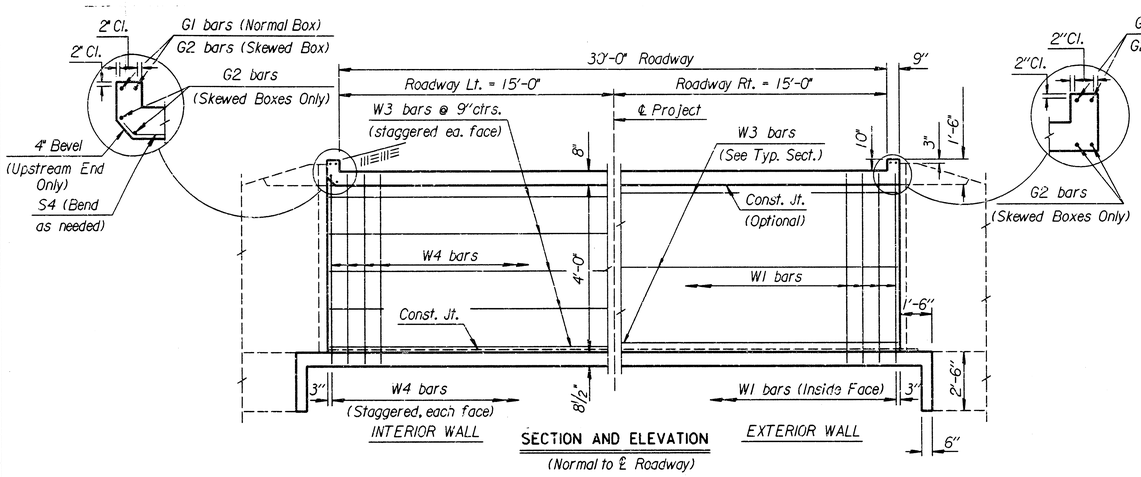

SECTION AND ELEVATION
(Normal to ℄ Roadway)

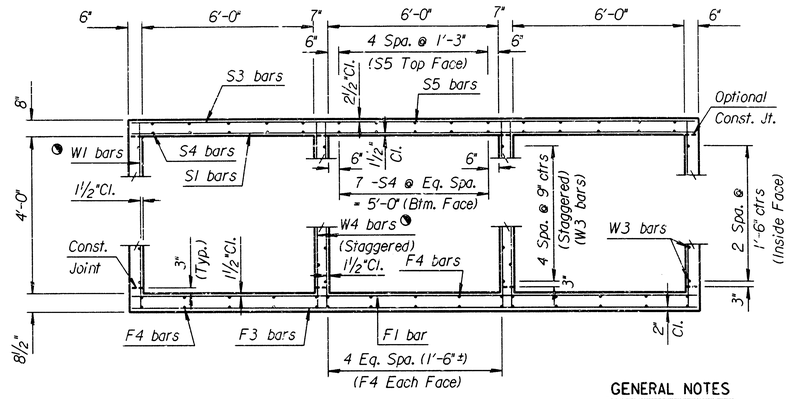

TYPICAL SECTION

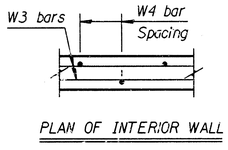

PLAN OF INTERIOR WALL

● See RCB Auxillary Details for Optional Splice.

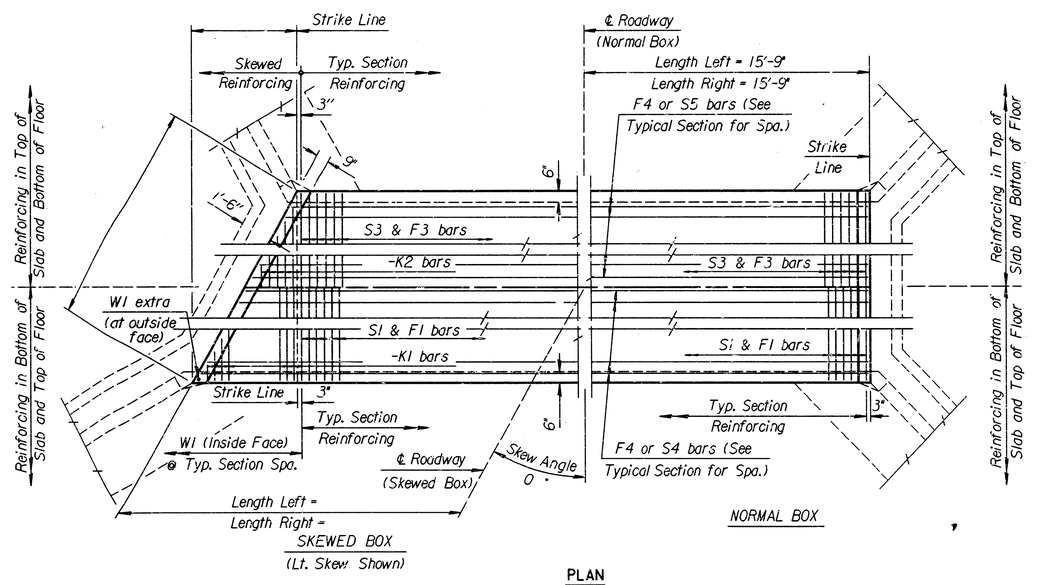

PLAN

GENERAL NOTES

LOADING: HS20-44 AASHTO Specifications, 1983 Edition.
UNIT STRESSES: Class AAA Concrete; f'c = 4,000 p.s.i.
Reinforcing Steel; fy = 60,000 p.s.i.
FILL HEIGHT: Unless otherwise noted, the Design Fill Height is measured from the riding surface at the culvert and shall include the surfacing.
CONCRETE: Class AAA Concrete shall be used throughout. Bevel all exposed edges with a ¾ inch triangular moulding. Where Class AAA Concrete (AE) is specified, it shall be placed in the top slab above the Construction Joint.
REINFORCING: All reinforcing shall conform to ASTM A615, Grade 60. All dimensions relative to reinforcing steel shall be to centerline of bar unless otherwise noted.
EXCAVATION: Excavation for culverts less than bridge length shall not be paid for directly but shall be subsidiary to Class AAA Concrete. Excavation for RCB Bridges shall be paid for as Class III Excavation.
STRIKE LINE: Wingwalls and that portion of the RCB outside the Strike Line shall be constructed level. Footing for wingwalls shall be constructed with the culvert floor. See wingwall detail sheet.
BASIS OF PAYMENT: The "3-6'x4' R.C. Box" shall be bid as a lump sum which shall include all labor, materials, excavation, concrete, reinforcing steel and all other incidentals necessary to complete the work. Quantities are shown for information only.

CULVERT SUMMARY

Flow Line Elev. Lt.	Flow Line Elev. Rt.	Crown Gr. Elev.	Design Fill Ht.	Skew	Left Wings	Right Wings	Scour Apron	Soil Saver	Granular Backfill	Concrete			Reinf. Steel (Gr. 60)		
										Barrel (Cu.Yds.)	Wings (Cu.Yds.)	Total (Cu.Yds.)	Barrel (Lbs.)	Wings (Lbs.)	Total (Lbs.)
122.30	122.10	128.41	2	0	FLARED	FLARED	NO	NO	NO	43.36	11.12	54.48	7694.51	865.95	8560.47

BAR SCHEDULE

F1				F3				F4			S1								S3				S4			S5		
Size	Spa.	No.	Length	Size	Spa.	No.	Length	Size	No.	Length	Size	Spa.	No.	Length	Size	Spa.	No.	Length	Size	Spa.	No.	Length	Size	No.	Length	Size	No.	Length
5	5½"	69	19'-10"	-	-	-	-	5	7"	54	19'-10"	4	30	31'-2"	5	5½"	69	19'-10"	-	-	-	-	5	7"	54	19'-10"	5	21	31'-2"	4	15	31'-2"

K1				K2				W1				W3				W4				G1			G2						
Size	Spa.	No.	Length	Size	Spa.	No.	Length	Size	Spa.	No.	Length	Size	Spa.	No.	Length	Size	No.	Length	Size	Spa.	No.	Length	Size	No.	Length	Size	Spa.	No.	Length
-	-	-		-	-	-		4	9"	84	5'-1"	-	-	-	-	4	16	31'-2"	4	9"	84	5'-1"	5	4	19'-10"	-	-	-				

Minimum Splice Lengths	
#4	1'-4"
#5	1'-8"
#6	2'-0"

SUMMARY OF QUANTITIES

Class AAA Concrete	54.5 C.Y.
Class AAA Concrete (AE)	0.0 C.Y.
Reinforcing Steel (Gr. 60)	8560 Lbs.
Reinforcing Steel (Epoxy Coated)	0 Lbs.
~~Class III Excavation~~	~~0 C.Y.~~
~~Foundation Stabilization (Set)~~	~~0 C.Y.~~
~~Concrete for Seal Course (Set)~~	~~0 C.Y.~~
~~Granular Backfill (Wingwalls) (Set)~~	~~0 C.Y.~~

NO.	DATE	REVISIONS	BY	APP'D

KANSAS DEPARTMENT OF TRANSPORTATION
Sta. 8+87
TRIPLE 6' x 4' RCB
~~BR-3.06.04~~
SEDGWICK CO.

FHWA APPROVAL		6-5-91	APP'D	KENNETH F. HURST
DESIGNED	DETAILED		QUANTITIES	TRACED
DESIGN CK.	DETAIL CK.		QUAN.CK.	TRACE CK.

DESIGN	DATE
DETAILS	DATE
QUANTITIES	DATE
TRACING	DATE
CHECKED	DATE

Drawing File: i:/96266/001/RCB3-6X4.DGN
Plotted by: ras 3-15-97 View=

PROJECT NO.	YEAR	SHEET NO.	TOTAL SHEETS
468-82636	19 97	6	9

VERSION: 5.1.0 COMPILED: 03/01/95

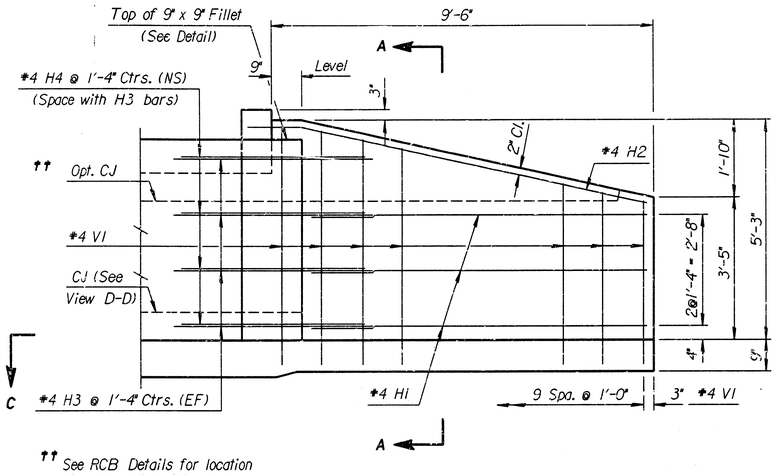

†† See RCB Details for location of construction joint.

ELEVATION OF WINGWALL
(Backface Shown)

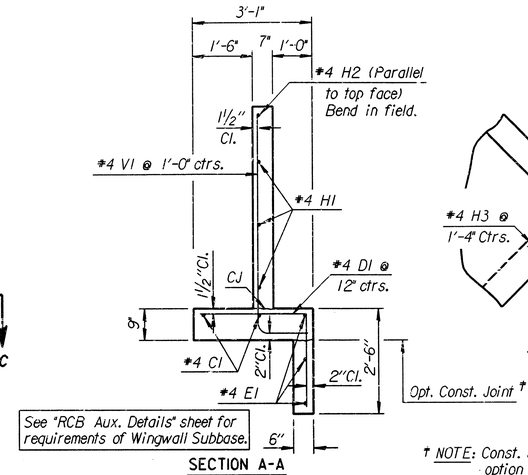

SECTION A-A

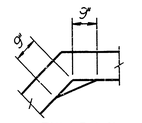

Fillet Detail

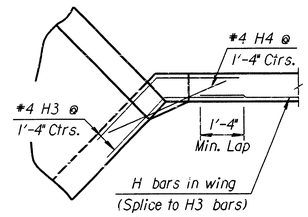

DETAIL OF 9" x 9" FILLET
(Plan View)

† NOTE: Const. Jt. may be used at Contractor's option when approved by the Engineer. DI bars or mesh may be spliced thus: ⌐¬ Minimum overlap shall be 1'-3". No increase in quantities or cost shall be allowed when Contractor elects this option.

GENERAL NOTES

UNIT STRESSES: Class AAA Concrete; f'c = 4,000 p.s.i.
Reinforcing Steel; fy = 60,000 p.s.i.

CONCRETE: Class AAA Concrete shall be used throughout. Bevel all exposed edges with a ¾ inch triangular moulding.

REINFORCING: All reinforcing shall conform to ASTM A615, Grade 60. Welded Wire Fabric shall conform to ASTM A185. All dimensions relative to reinforcing steel shall be to center-line of bar unless otherwise noted.

QUANTITIES: Wingwall Quantities include all quantities outside the neat lines of the box, excluding the hubguard.

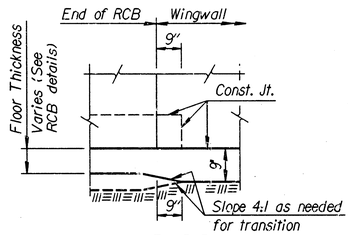

VIEW D-D

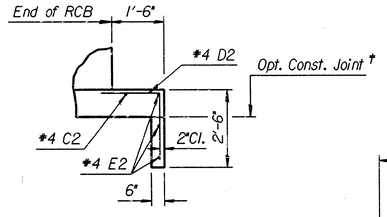

SECTION E-E

NOTE:
EF = Each Face
NS = Near Side
FS = Far Side
CJ = Const. Joint

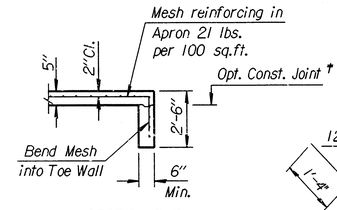

SECTION B-B

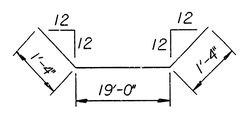

E2

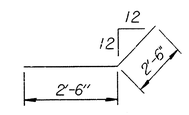

H3

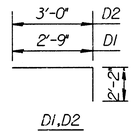

D1, D2

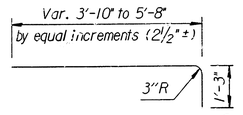

V1
(2 Req'd., each length)

BENDING DIAGRAM
(All dimensions are out to out of bars.)

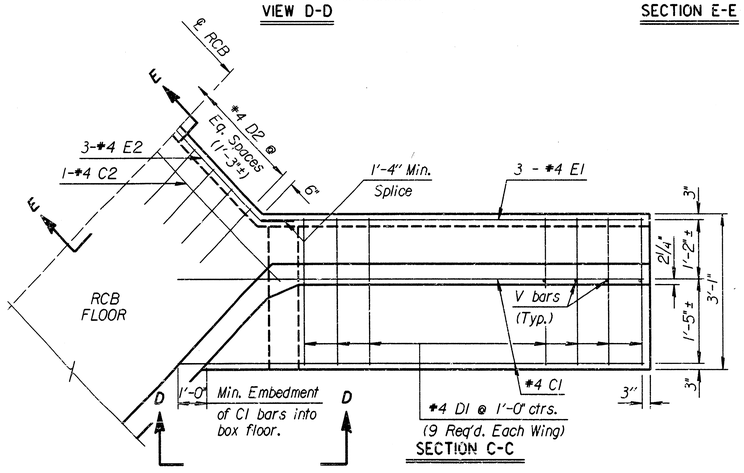

SECTION C-C

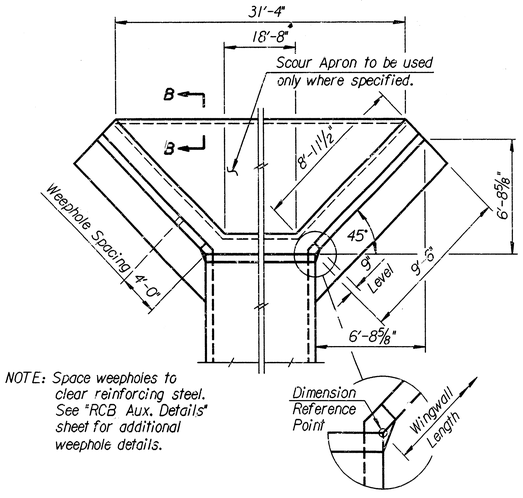

NOTE: Space weepholes to clear reinforcing steel. See "RCB Aux. Details" sheet for additional weephole details.

WING DIMENSIONS FOR NORMAL BOX
(3½:1 Embankment Slope)

Quantities listed below are included in the Summary of Quantities shown on the RCB details.

WINGWALL QUANTITIES (One End Only)		
Class AAA Concrete:		
Wingwalls	5.56	CY.
Apron	0.00	CY.
Soil Saver	0.00	CY.
Reinforcing Steel	432.98	Lbs.
Welded Wire Fabric	0.00	Lbs.

NOTE: Reinforcing Bar List is for both wings at one end of box only.

* See Bending Diagram

		#4C1	#4D1	#4E1	#4C2	#4D2	#4E2	#4V1	#4H1	#4H2	#4H3	#4H4
0° Skew	No.	4	18*	6	1	15*	3*	20	6	2	16*	8
	Length	11'-7"	4'-11"	8'-9"	19'-10"	5'-2"	21'-8"	*	8'-4"	10'-3"	5'-0"	3'-6"

NO.	DATE	REVISIONS	BY	APP'D

KANSAS DEPARTMENT OF TRANSPORTATION
Stg. 8+87

FLARED WINGWALLS
4 FT. RISE (0°SKEW)

~~BR-10.00.04~~ SEDGWICK CO.

FHWA APPROVAL		6-5-98 APP'D	KENNETH F. HURST
DESIGNED	DETAILED	QUANTITIES	TRACED
DESIGN CK.	DETAIL CK.	QUAN.CK.	TRACE CK.

DESIGN / DETAIL / QUANTITIES / DRAWING / CK TRACED — DATE

Drawing File: i:/96266/001/RCB3-6X4.DGN
Plotted by: ras 3-15-97 View

PROJECT NO.	YEAR	SHEET NO.	TOTAL SHEETS
468-82636	1997	7	9

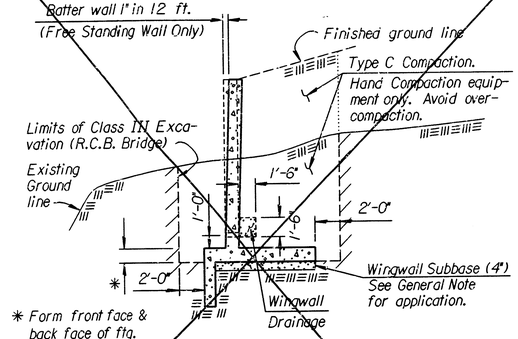

SECTION THRU WINGWALL

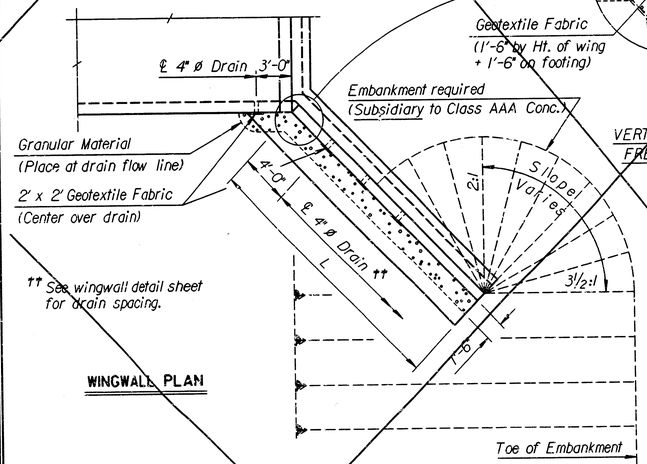

WINGWALL PLAN

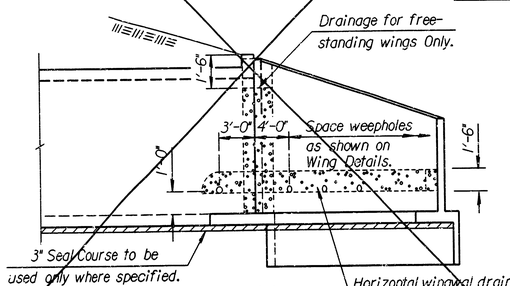

ELEVATION

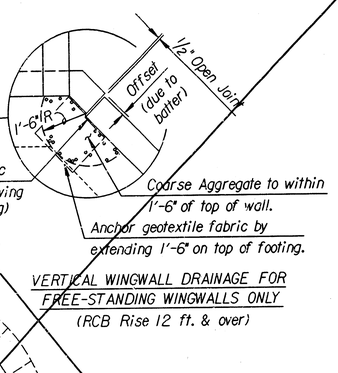

VERTICAL WINGWALL DRAINAGE FOR FREE-STANDING WINGWALLS ONLY

(RCB Rise 12 ft. & over)

GENERAL NOTES

Wingwall Drainage:

1. All wingwalls with weepholes shall have horizontal wingwall drainage as shown. Free-standing wingwalls shall also have the vertical wingwall drainage.
2. Construction and materials for wingwall drainage, including weepholes, geotextile fabric and granular material, shall be subsidiary to the bid item, "Class AAA Concrete". Granular material for wingwall drainage shall conform to the requirements of UD-1. Weepholes may be a formed opening or corrugated polyethylene tubing.

Wingwall Subbase:

1. Wingwall subbase shall be constructed at all wingwall footings to assure the assumed coefficient of friction between the concrete footing and the foundation, with the following exceptions:
   a) Wingwall subbase will not be required for footings on RCB's 6 feet or less in height unless otherwise determined by the Engineer.
   b) The subbase will also not be required for footings founded on rock or clean, granular material as determined by the Engineer.
2. Subbase shall consist of 4" compacted granular material consisting of commercial grade clean sand or UD-1 material. All excavation, material and labor necessary to construct the wingwall subbase shall be subsidiary to "Class AAA Concrete".

Seal Course:

1. Seal Course consisting of 3" min. of Commercial Grade Concrete shall be constructed to the limits directed by the Engineer. No reinforcing in the floor of the slab or wall footing shall be placed until the Seal Course has gained sufficient strength to permit working upon it without injury.

Ø Longitudinal bars shall extend through the joint to provide a minumum lap equal to the required splice length. See RCB Details Sh. for required splice length.

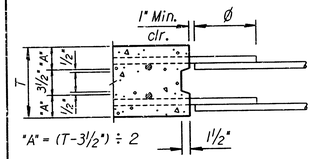

VERTICAL CONSTRUCTION JOINTS

NOTE: Vertical construction joints shall be perpendicular to the longitudinal axis of the RCB and shall be placed at any location as needed for construction and as approved by the Engineer.

NOTE: Horizontal construction joints shall be a roughened finish.

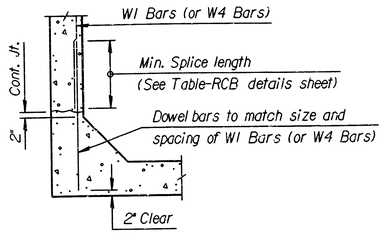

OPTIONAL BAR DETAIL

The Contractor shall have the option of using Dowel Bars to match vertical wall bars as shown, however no allowance will be made for additional steel required for bar laps.

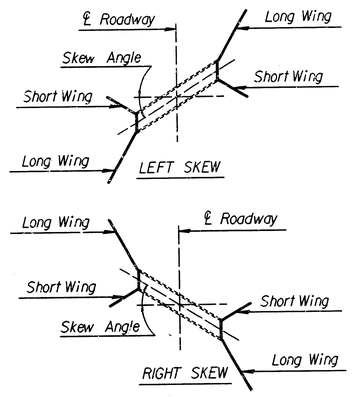

PLAN VIEW SKEWED R.C.B.

GENERAL NOTES

Foundation Stabilization:

1. At sites where the wingwall footing or culvert floor is located within the limits of an existing streambed or is founded on unsuitable material, the Engineer will determine the depth of Foundation Stabilization.
2. Foundation Stabilization may be required under the box and/or wingwalls as directed by the Engineer. The granular material placed for foundation stabilization shall be measured and paid for at the contract price per cubic yard for "Foundation Stabilization". Material for Foundation Stabilization shall be suitable backfill material as approved by the Engineer. The excavation for the placement of granular material shall be subsidiary to the bid item, "Foundation Stabilization".

Granular Backfill (Wingwalls):

1. In locations where the material behind the wingwall consist of soils judged as high plasticsity clays, fat clays, expansive clays or organic clays, Granular Backfill (Wingwalls) shall be used. Granular Backfill construction may be used separately or combined with Foundation Stabilization as directed by the Engineer.
2. Measurement for the bid item, "Granular Backfill (Wingwalls)", shall be measured in Cubic Yards to the theoretical limits as shown. Drainage pipe, rodent screens, and excavation shall be subsidiary to the bid item, "Granular Backfill (Wingwalls)".
3. Material for Granular Backfill (Wingwalls) shall conform to the requirements of UD-1 or BD-1. Drainage Pipe shall be corrugated polyethylene tubing conforming to KDOT Specifications.

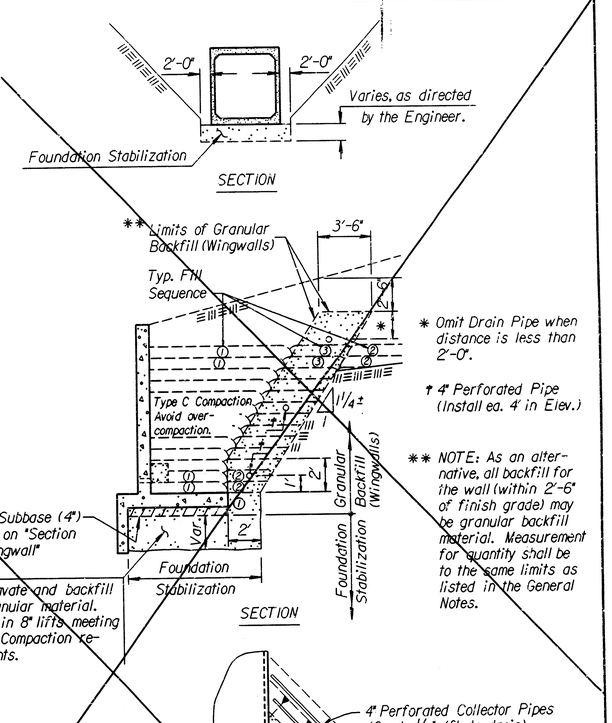

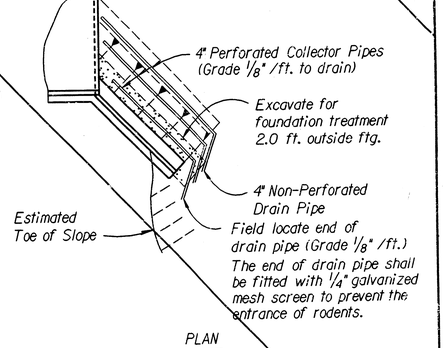

GRANULAR BACKFILL AND FOUNDATION STABILIZATION

NO.	DATE	REVISIONS	BY	APP'D
1	10-2-91	Change drainage details	RAM	KFH

KANSAS DEPARTMENT OF TRANSPORTATION

RCB AUXILIARY DETAILS

~~STD. NO. 22~~

FHWA APPROVAL			10-09-91	APP'D	KENNETH F. HURST
DESIGNED	RAM	DETAILED	RDR	QUANTITIES	TRACED
DESIGN CK.	RRR	DETAIL CK.	RRR	QUAN.CK.	TRACE CK.

DGN: FROM BRJMD. DESIGN
CK. CHECK DATE DATE DATE DATE DATE DATE
PROJ. DESIGN DETAIL QUANTITIES TRACED RETRACED

Drawn By: KDOT/PEC
DGN File: i:/1996/96266/auxdtl.dgn View=
Plotted by: ras 3-15-97

PROJECT NO.	YEAR	SHEET NO.	TOTAL SHEETS
468-82636	1997	8	9

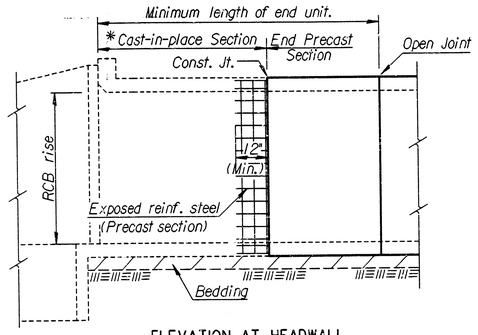

ELEVATION AT HEADWALL

(End unit using combination of cast-in-place and precast sections.)

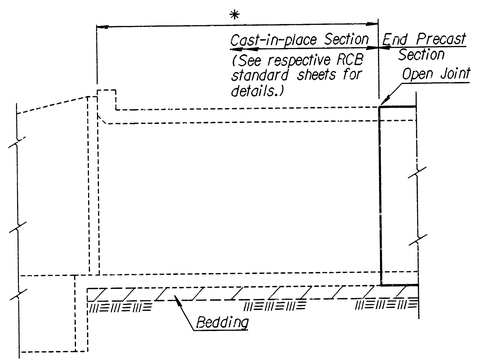

ELEVATION AT HEADWALL

(End unit using cast-in-place construction.)

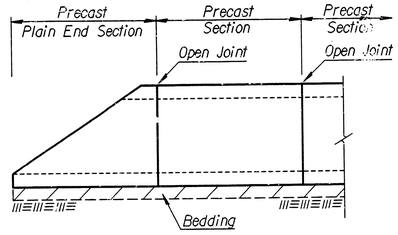

ELEVATION AT PRECAST END SECTION

(Precast End Sections are permitted where straight wings are shown in the plans or at the downstream end for single cell RCB with a rise of six feet or less.)

GENERAL NOTES

PRECAST BOX CULVERTS: If precast boxes are specified, construct them at the locations shown in the plans and according to the requirement shown on this sheet. When approved by the Engineer, precast box culverts may be used in lieu of cast-in-place box culverts. If the Contractor chooses the precast option, use the cast-in-place quantities as the cost basis. This cost includes all labor, equipment, material and incidentals necessary to complete the installation.

Unless otherwise approved by the Engineer, use cast-in-place collars at horizontal and vertical changes in RCB alignment. Use cast-in-place end sections and wingwalls except as noted on this sheet. The Engineer may require cast-in-place sections at junctions of drainage structures.

Cast-in-place concrete work shall conform to the requirements of the KDOT Specifications and KDOT's "Guidelines for Structural Design and Detail of Reinforced Concrete Box Culverts". Use Class AAA concrete and Grade 60 reinforcing steel conforming to ASTM A615M for cast-in-place construction.

SPECIFICATIONS: Single-cell Precast Concrete Box Culverts shall conform to the requirements of the following specifications except as noted in the KDOT Specifications. Design multiple-cell precast boxes in accordance with the criteria used to develop the single-cell precast boxes. (See Appendices of ASTM Specification C789M and C850M and the latest AASHTO Specifications.)

Condition	Min. Fill	AASHTO	Equiv. ASTM
≥ 2'-0" fill	2'-0"	M259, Table 2	C789, Table 2
< 2'-0" fill	0	M273, Table 2	C850, Table 2

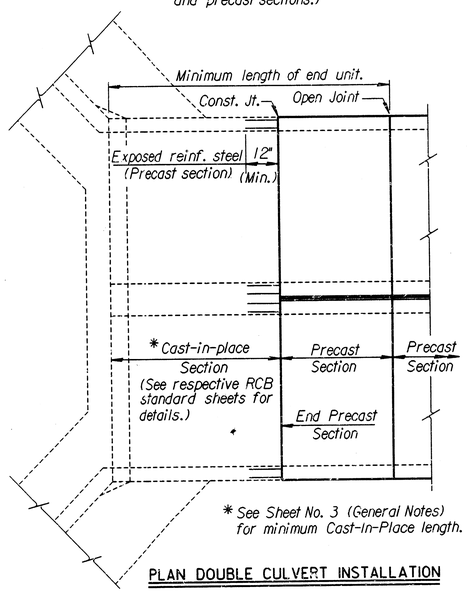

* See Sheet No. 3 (General Notes) for minimum Cast-In-Place length.

PLAN DOUBLE CULVERT INSTALLATION

(End unit using combination of cast-in-place and precast sections.)

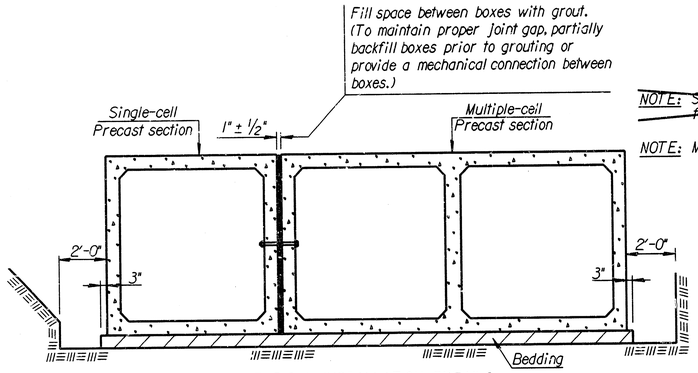

TYPICAL INSTALLATION DETAILS

~~NOTE: See "Bridge Excavation" sheet, (Std. No. 100), for excavation details and basis of payment.~~

NOTE: Minimum length of precast section shall be 4'-0".

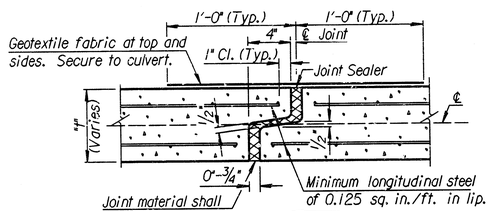

OPTION "A"

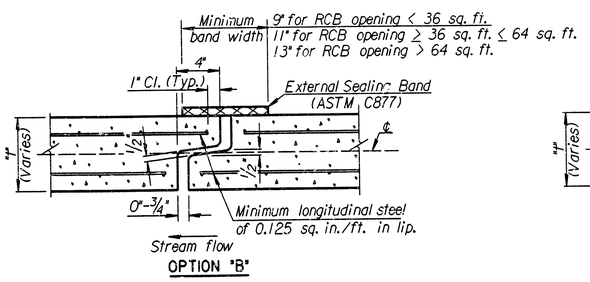

OPTION "B"

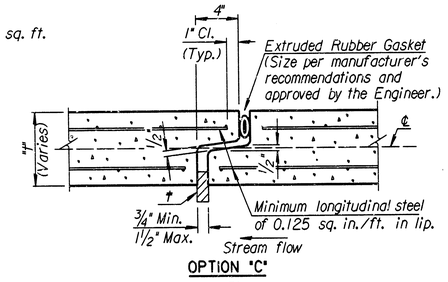

OPTION "C"

† Insert temporary, 3/4"-1" wide, hardwood wedges to prevent over-compressing gasket.

OPEN JOINT DETAIL

NO.	DATE	REVISIONS	BY	APP'D
4	1-17-95	Revised general notes	LRR	KFH
3	6-22-94	Added option 'C' & revised notes	RAM	KFH
2	3-1-93	Revised general notes	RAM	KFH
1	9-1-92	Revised general notes & detail notes	RAM	KFH

KANSAS DEPARTMENT OF TRANSPORTATION

PRECAST CONCRETE BOX CULVERT DETAILS

~~BR03I~~

FHWA APPROVAL		1-26-95	APP'D	KENNETH F. HURST
DESIGNED	DETAILED	PF	QUANTITIES	CADD
DESIGN CK.	DETAIL CK.	RAM	QUAN. CK.	CADD CK.

Plotted By : MAF
Std. Base File : /usr2/stand/us/br03I.dgn
Plot File : n:/1996/96266/001/br03I.dgn
Server File : /usr
Plot Date : 3-15-97
Server : witch
View: PLOTI

PROJECT NO.	YEAR	SHEET NO.	TOTAL SHEETS
468-82636	1997	9	9

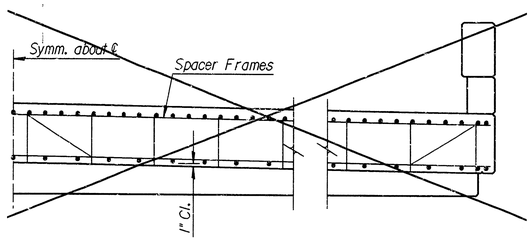

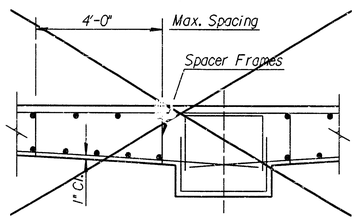

CONTINUOUS HAUNCHED SLAB

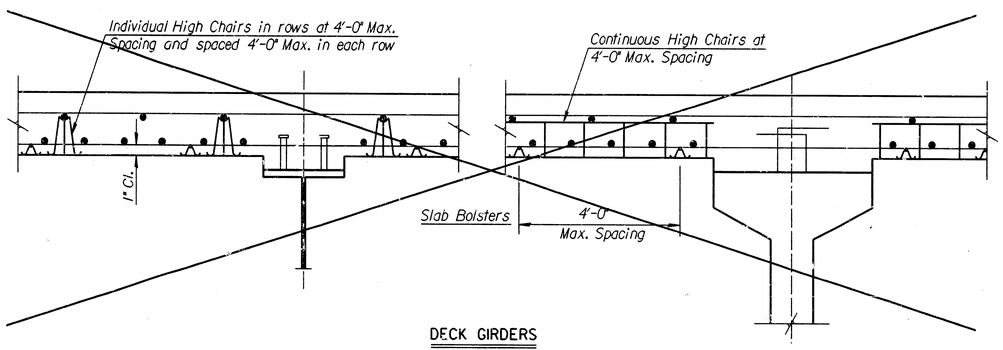

DECK GIRDERS

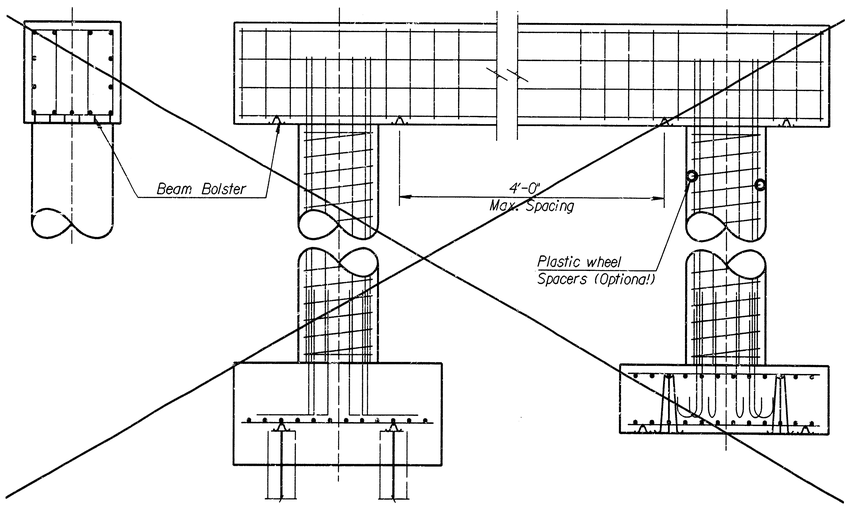

PIER

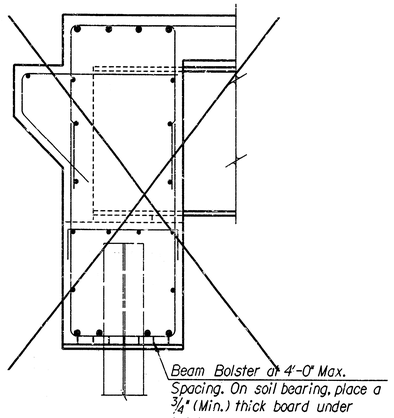

ABUTMENT

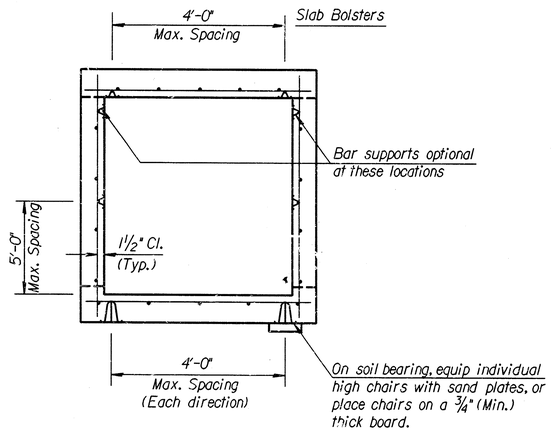

BOX CULVERT

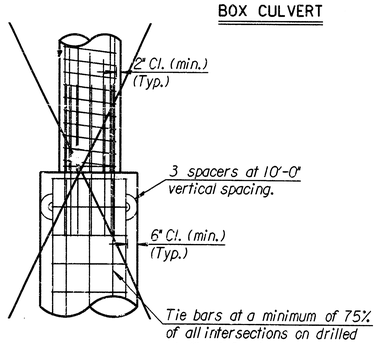

DRILLED SHAFT

TYPICAL SECTION

Reference is made to the latest edition of the CRSI "Manual of Standard Practice" for recommended industry practices concerning reinforcing steel.

Use only the following types of bar supports:

1) Wire Bar Supports:

a) Non-epoxy coated reinforcing: Class 1, 2, or 3 Protection

2) Plastic Bar Supports

3) Supplementary bars

Do not weld reinforcing steel to bar supports or to other reinforcing steel.

Tie bars at all intersections around the perimeter of each mat and at not less than 2'-0" centers or at every intersection, whichever is greater.

Where more than one length of bar support is required, lap the end legs so they are locked or tied together.

Use proper height supports to maintain the distance between the reinforcing and the formed surface or the top surface of deck slabs within 1/4" of that indicated on the plans.

Spacings shown are maximums. Use sufficient supports, as determined by the Engineer, to retain the reinforcing steel in position.

Construct any platforms, required for the support of workers and/or equipment during concrete placement, directly on the forms and not on the reinforcing steel.

Designs and arrangements of Supports or Spacers other than as shown on this sheet, may be used with the permission of the Engineer.

NO.	DATE	REVISIONS	BY	APP'D
3				
2				
1				

KANSAS DEPARTMENT OF TRANSPORTATION

SUPPORTS AND SPACERS FOR REINFORCING STEEL

~~SR120~~

FHWA APPROVAL		6-15-95	APP'D	KENNETH F. HURST	
DESIGNED	RAM	DETAILED	GFK	QUANTITIES	CADD GFK
DESIGN CK.	LRR	DETAIL CK.	RAM	QUAN. CK.	CADD CK. RAM

18-5-14

Plotted By : maf
Plot File : i:/1996/96266/001/br120.dgn
Plot Date : 3-15-97
Std. Base File : /usr2/stand/us/br120.dgn
Working File : /usr2/
Back Up File : witch
View: PLOT