STORMWATER DRAIN #191

HAWTHORNE ADDITION

LAKE #2

PROJECT NO. 468-83517

CITY OF WICHITA, KANSAS

NIEL D. CABLE, CITY ENGINEER

OCA #751360

GENERAL NOTES

1. UNLESS SHOWN OR OTHERWISE STATED ON THESE DRAWINGS, MATERIALS AND CONSTRUCTION SHALL BE IN ACCORDANCE WITH THE CITY OF WICHITA STANDARD SPECIFICATIONS.

2. THE TOPS OF INLETS AND MANHOLES AS NOTED ON THE PLANS MAY VARY SO AS TO MEET PROPOSED TOP OF CURB ELEVATIONS OR PAVEMENT ELEVATIONS. THE FIELD ENGINEER SHALL LOCATE INLETS AND MANHOLES WITH REFERENCE TO PROPOSED PAVING PLANS OF THE PERTINENT STREETS.

3. ALL CONCRETE SHALL BE STANDARD PAVING MIX UNLESS OTHERWISE NOTED.

4. THE CONTRACTOR SHALL BE RESPONSIBLE FOR PRESERVING PROPERTY IRONS. THE CONTRACTOR SHALL BE REQUIRED TO RE-ESTABLISH ANY PROPERTY IRONS WHICH ARE DAMAGED OR DESTROYED BY HIS CONSTRUCTION OPERATIONS. SUCH IRONS SHALL BE RE-ESTABLISHED BY A LICENSED LAND SURVEYOR IN ACCORDANCE WITH STATE LAWS.

5. TREES TO BE REMOVED ARE MARKED ⊠. ALL TREES WHICH IN THE OPINION OF THE FIELD ENGINEER CAN BE SAVED, SHALL BE SAVED.

6. CONTRACTOR SHALL NOTIFY UTILITY COMPANIES OF CONSTRUCTION SCHEDULING.

7. EXISTING UTILITIES AND THEIR LOCATIONS, AS SHOWN ON THE PLANS REPRESENT THE BEST INFORMATION OBTAINABLE FOR DESIGN. LOCATION INFORMATION HAS BEEN OBTAINED FROM THE VARIOUS COMPANIES AND IS EITHER FROM COMPANY UTILITY DRAWINGS OR COMPANY PROVIDED FIELD LOCATIONS. THE PLAN LOCATIONS SHOWN ARE NOT GUARANTEED. ADDITIONAL EXISTING UTILITIES MAY ALSO BE ENCOUNTERED.

8. CONTRACTOR WILL BE REQUIRED TO PROVIDE A MINIMUM ADVANCE NOTICE OF FORTY-EIGHT (48) HOURS TO UTILITY COMPANIES TO STARTING ANY EXCAVATION AS FOLLOWS:

KANSAS ONE-CALL	687-2470
	OR 687-2470 (LOCAL WICHITA)

THE CONTRACTOR MUST NOTIFY THE FOLLOWING IN CASE OF EMERGENCY:

SBC (TELEPHONE)	800-870-8390
COX COMMMUNICATIONS (CABLE)	262-0661
WESTAR (ELECTRIC)	383-8600
KANSAS GAS SERVICE (GAS)	832-3101
CITY OF WICHITA WATER & SEWER MAINT.	262-6000
AQUILA (GAS)	946-0096

9. RUBBLE FROM THE REMOVAL OF MISCELLANEOUS STRUCTURES AND EXCESS EXCAVATION WHICH IS TO BE WASTED SHALL BE DISPOSED OF ON SITES TO BE PROVIDED BY THE CONTRACTOR. THESE SITES SHALL BE APPROVED BY THE ENGINEER AS TO SUITABILITY, APPEARANCE AND SITE LOCATION. LOCATIONS THAT, IN THE OPINION OF THE ENGINEER, WILL LEAVE AN UNSIGHTLY APPEARANCE WILL NOT BE APPROVED. ALL DISPOSAL SITES MUST BE APPROVED BY THE KANSAS DEPARTMENT OF HEALTH AND ENVIRONMENT. MATERIAL EITHER STOCKPILED OR DISPOSED OF IN A FLOOD PLAIN WOULD REQUIRE A KANSAS STATE BOARD OF AGRICULTURE PERMIT. ANY MATERIAL DUMPED IN WATERS OF THE UNITED STATES OR WETLANDS IS SUBJECT TO U.S. CORPS OF ENGINEERS PERMITTING REGULATIONS. ANY MATERIAL BURIED OR STOCKPILED BEYOND APPROVED CONSTRUCTION LIMITS WOULD REQUIRE ADDITIONAL ARCHAEOLOGICAL INVESTIGATIONS UNLESS BURIED IN A PREVIOUSLY APPROVED BORROW LOCATION.

10. ALL DISTURBED AREAS SHALL BE SEEDED AND MULCHED. SEEDING SHALL BE RYE GRASS AT A RATE OF 200 LBS PER ACRE. COST SHALL BE CONSIDERED SUBSIDIARY TO SITE RESTORATION.

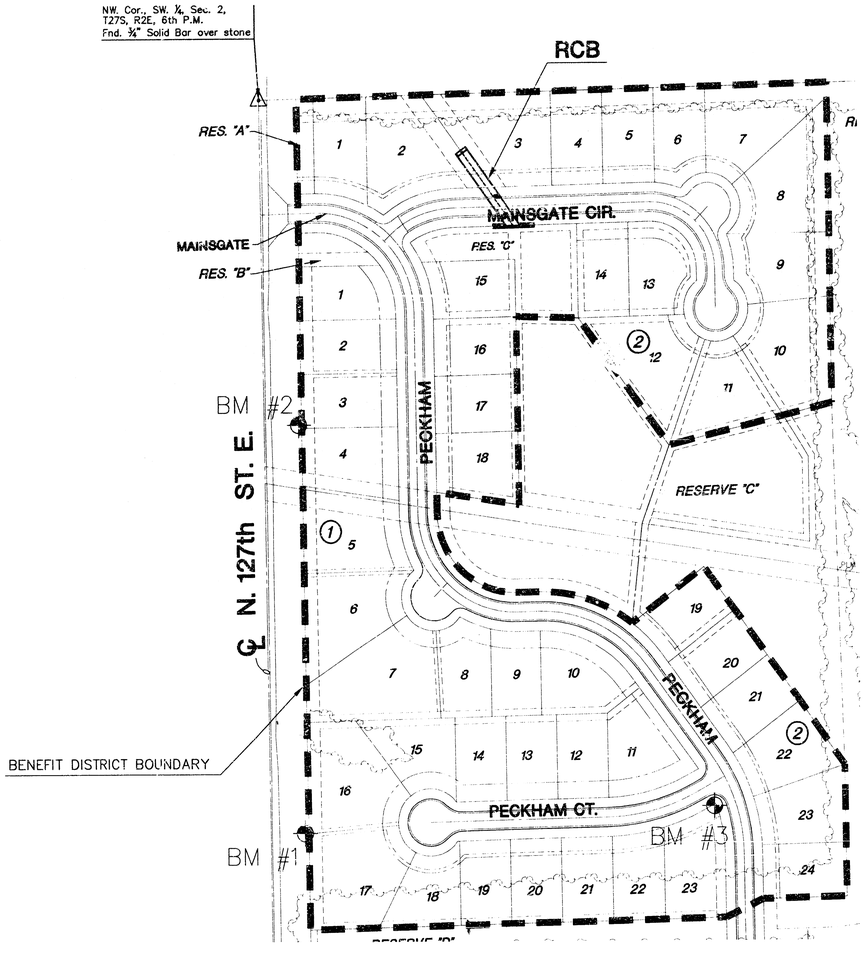

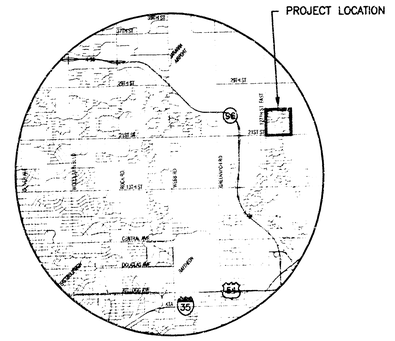

LOCATION MAP

N

SCALE: 1" = 100'

LEGEND

• IRON

INDEX TO DRAWINGS

SHEET NO.	DESCRIPTION
1	TITLE SHEET
2	INLET DETAILS
3	RCB PLAN
4–9	RCB DETAILS
10	GRADING PLAN
11–14	BMP DETAILS
15	FINAL PLAT

BENCHMARKS

BM #1 "T" POST 1571'+/- N. & 50'+/- E. OF SW COR. 2-27S-2E. 5'+/- N. &10'+/- W. OF SW COR. LOT 16, BLK 1. ELEV.=1371.52

BM #2 "T" POST 2172'+/- N. & 50'+/- E. OF SW COR. 2-27S-2E. 4'+/- N. & 10' +/- W. OF SW COR. LOT 3, BLK 1. ELEV.=1373.52

BM #3 "T" POST 5'+/- S. & 5'+/- W. OF NE COR. LOT 23. BLK 1. SW COR. PECKHAM CT. AND PECKHAM. ELEV.=1363.16

GREGORY V. ALLISON LICENSED 11159 KANSAS PROFESSIONAL ENGINEER 11/21/04

H:\CIVIL\02167\DWG\SMS\PECKHAM (B)\02167DT.DWG

MKEC ENGINEERING CONSULTANTS
411 N. WEBB ROAD
WICHITA, KS. 67206
316 - 684 - 9600

HAWTHORNE ADDITION
PROJECT NAME

TITLE SHEET
SHEET TITLE

DESIGN BY:	DRAWN BY:	CHECKED BY:
DMU	DMU	GJA

DATE	JOB NO.	SHEET/OF
JANUARY 2004	02167DT	1 / 15

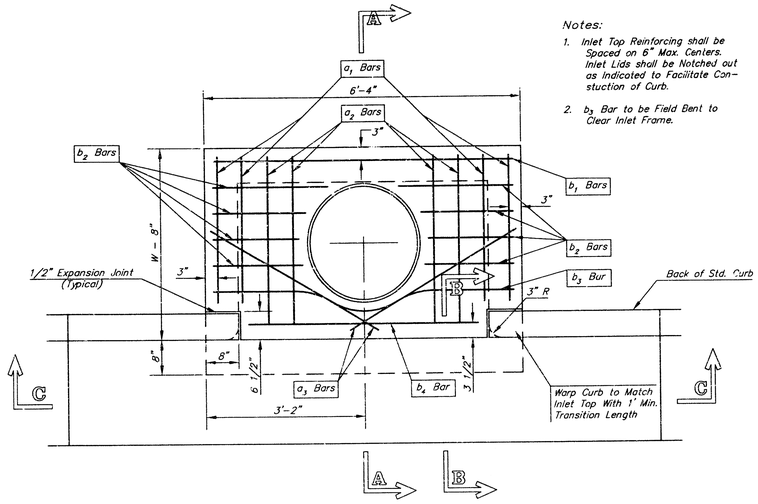

PLAN

Notes:

1. Inlet Top Reinforcing shall be Spaced on 6" Max. Centers. Inlet Lids shall be Notched out as Indicated to Facilitate Construction of Curb.
2. b_3 Bar to be Field Bent to Clear Inlet Frame.

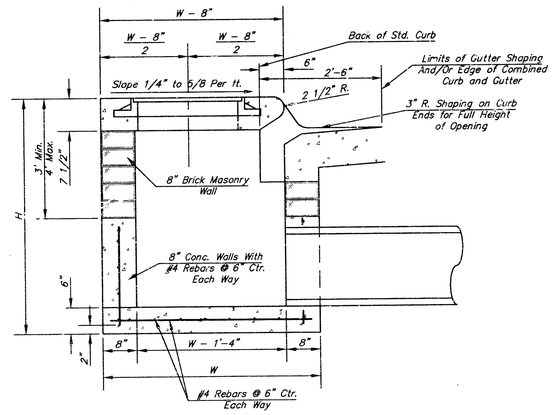

SECTION A-A

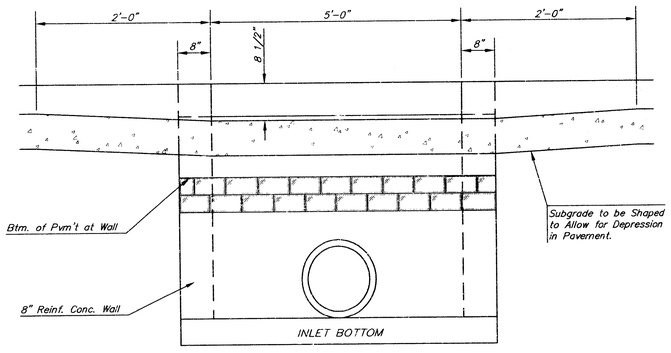

SECTION C-C

STEEL SCHEDULE

BAR		a_1	a_2	a_3	b_1 W=4'-4"	b_1 W=5'-4"	b_1 W=6'-4"	b_1 W=7'-4"	b_1 W=8'-4"	b_2	b_3	b_4	Wt. Lbs.
NUMBER		4	4	2	1	3	5	7	9	6	1	1	
SIZE		#4	#4	#4	#4	#4	#4	#4	#4	#4	#4	#6	
LENGTH	W=4'-4"	5'-7"	6'-7"	4'-0"	6'-1"	–	–	–	–	1'-9"	6'-2"	4'-8"	60±
	W=5'-4"	7'-7"	8'-7"	5'-0"	–	6'-1"	–	–	–	1'-9"	6'-2"	4'-8"	81±
	L_1=6'-4"	9'-7"	10'-7"	6'-0"	–	–	6'-1"	–	–	1'-9"	6'-2"	4'-8"	101±
	W=7'-4"	11'-7"	12'-7"	7'-0"	–	–	–	6'-1"	–	1'-9"	6'-2"	4'-8"	121±
	W=8'-4"	13'-7"	14'-7"	8'-0"	–	–	–	–	6'-1"	1'-9"	6'-2"	4'-8"	141±

Note: a_3 Bars to be Placed Approx. 2" Below Top of Inlet Cover.

STANDARD CURB INLET PRECAST TOPS				
W	PRE-CAST TOP SIZE		PIPE SIZE	CU. YD. CONC.
4'-4"	3'-8"	6'-4" 7 1/2"	21" & SMALLER	0.38±
5'-4"	4'-8"	6'-4" 7 1/2"	24" & 30"	0.51±
6'-4"	5'-8"	6'-4" 7 1/2"	36" & 42"	0.64±
7'-4"	6'-8"	6'-4" 7 1/2"	48" & 54"	0.77±
8'-4"	7'-8"	6'-4" 7 1/2"	60" & 66"	0.90±

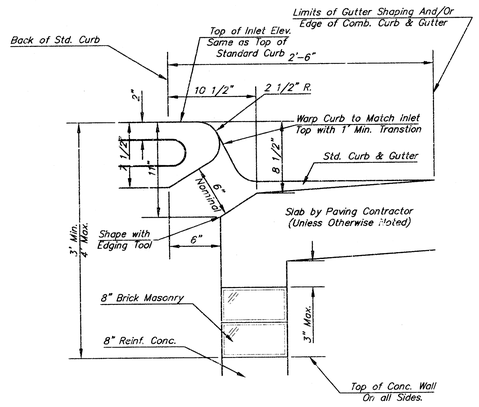

SECTION B-B

GENERAL NOTES

1. Concrete tops to be installed on thin mortar cushion to insure full support along brick walls. Concrete tops may be cast in place or precast. Concrete used for inlet construction shall be concrete pavement mix.
2. Contractor shall have the option of constructing 8" brick masonry walls between the concrete inlet base and top on this inlet when W=6'-4" and H=7'-0" or less.
3. Inlet invert shall be shaped with 8 sack sand mix concrete to create flow channels and to increase hydraulic efficiency such that the inlet will be self cleaning between all inlet and/or outlet pipes.
4. The ends of all pipes installed in inlets shall be cut off flush with the inside face of the inlet wall.

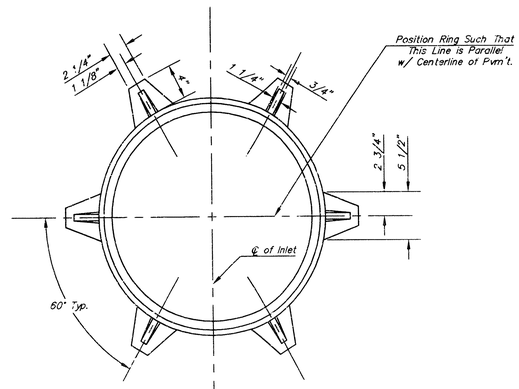

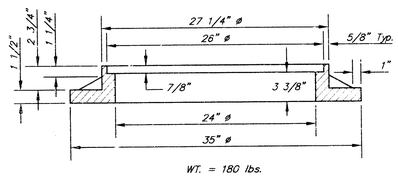

WT. = 180 lbs.

MANHOLE RING AND COVER

*See City of Wichita Standard Manhole Ring and Cover Detail Sheet for Cover Details to Be Used With Inlet Frame.

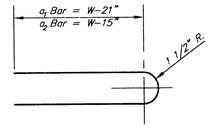

BENDING DIAGRAM

H:\CIVIL\02167\DWG\SWS\PECKHAM (B)\RCB\02167D01

THE CITY OF WICHITA
CITY ENGINEER'S OFFICE
CITY HALL - SEVENTH FLOOR
455 NORTH MAIN STREET
WICHITA, KANSAS 67202
(316) 268-4501
(316) 268-4114 FAX

STANDARD TYPE 1 CURB INLET OPENING = 6" x 5'-0"

NEIL D. CABLE, P.E. - CITY ENGINEER

PROJECT NUMBER	INDEX CODE
468-83517	751360
DATE: JAN 2004	SHEET 2 OF 15

HAWTHORNE ADDITION
LAKE #2
RCB PLANS

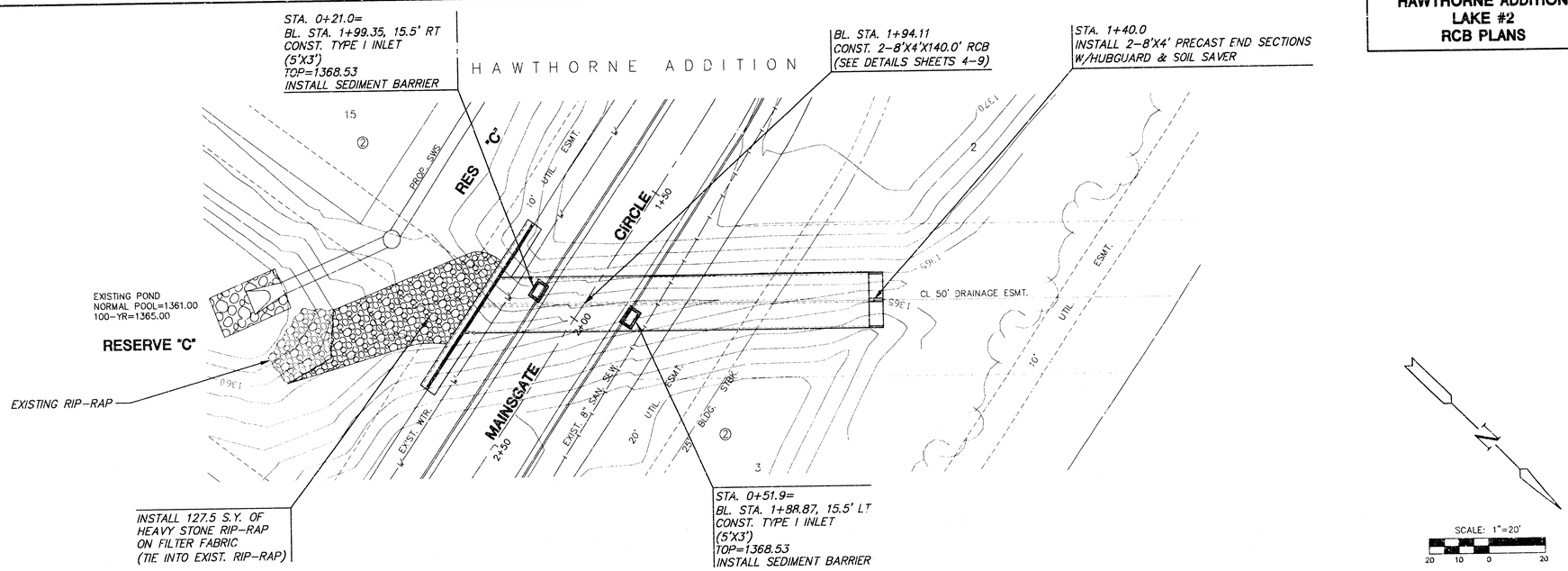

PLAN RCB

SCALE: 1"=20'

PROFILE RCB

SCALE: HORIZ. 1"=20'
SCALE: VERT. 1"=5'

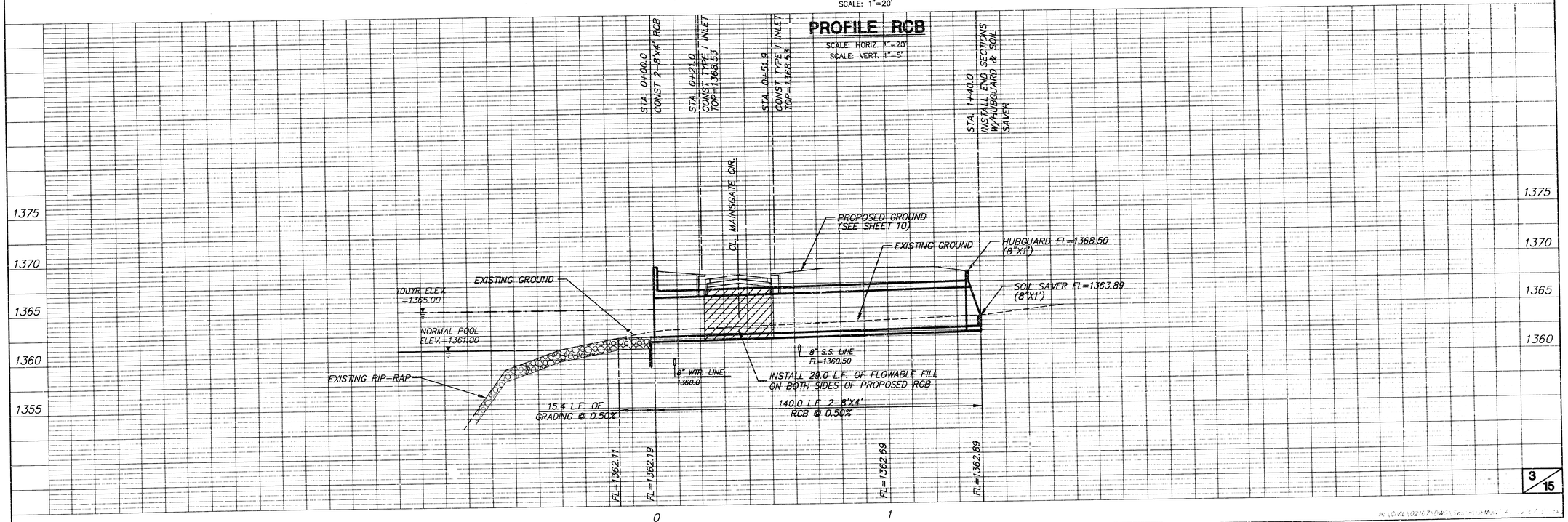

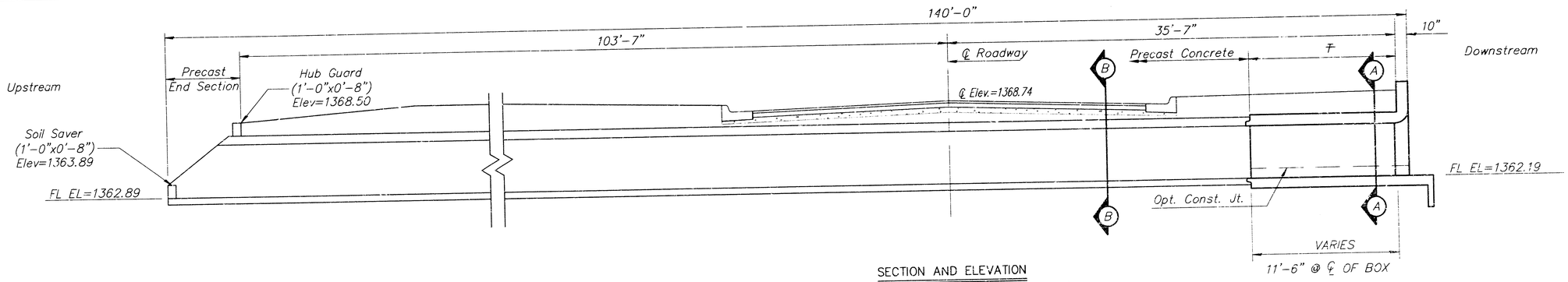

SECTION AND ELEVATION

(Normal to ℄ Roadway @ STA 1+94.11)

SCALE 1/4"=1'-0"

REINFORCING NOT SHOWN FOR CLARITY

∓ Hand Compaction Equip. Only in this area

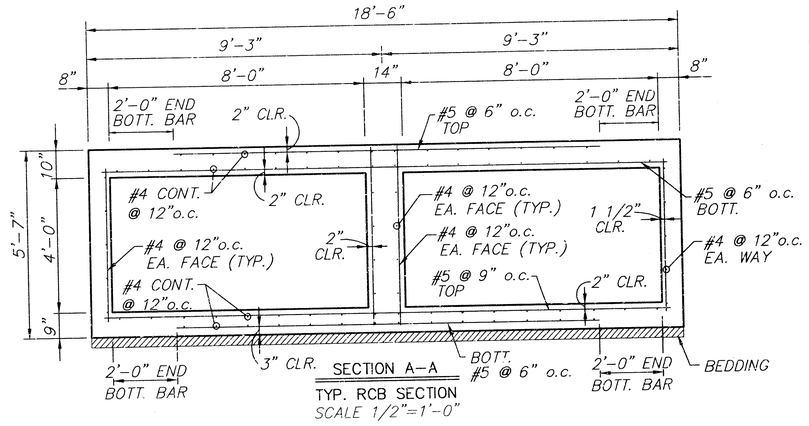

SECTION A-A

TYP. RCB SECTION

SCALE 1/2"=1'-0"

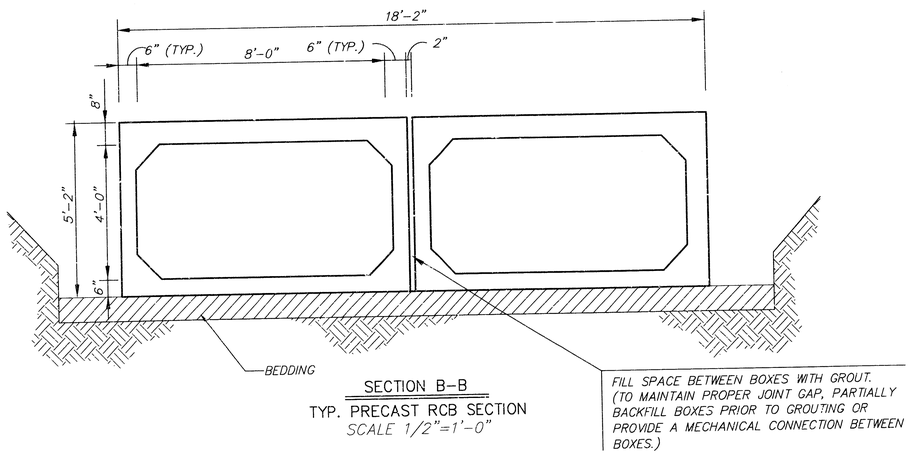

SECTION B-B

TYP. PRECAST RCB SECTION

SCALE 1/2"=1'-0"

FILL SPACE BETWEEN BOXES WITH GROUT. (TO MAINTAIN PROPER JOINT GAP, PARTIALLY BACKFILL BOXES PRIOR TO GROUTING OR PROVIDE A MECHANICAL CONNECTION BETWEEN BOXES.)

GENERAL NOTES

LOADING: HS20-44 AASHTO Specifications, 1996 Edition.

UNIT STRESSES: Class AAA (AE) Concrete; f'c = 4,000 p.s.i.
Reinforcing Steel; fy = 60,000 p.s.i.

CONCRETE: Class AAA (AE) Concrete shall be used throughout. Bevel all exposed edges with a 3/4" triangular moulding.

REINFORCING: All reinforcing shall conform to ASTM A615, Grade 60. All dimensions relative to reinforcing steel shall be to centerline of bar unless otherwise noted.

EXCAVATION: Excavation for culvert shall not be paid for directly but shall be subsidiary to box construction.

MKEC ENGINEERING CONSULTANTS
411 N. WEBB ROAD
WICHITA, KS. 67206
316 - 684 - 9600

HAWTHORN ADDITION - LAKE #2
PROJECT NAME

R.C.B. SECTIONS
SHEET TITLE

DFL	DMU	GJA
DESIGN BY:	DRAWN BY:	CHECKED BY:
JANUARY 2004	02167	4 / 15
DATE	JOB NO.	SHEET/OF

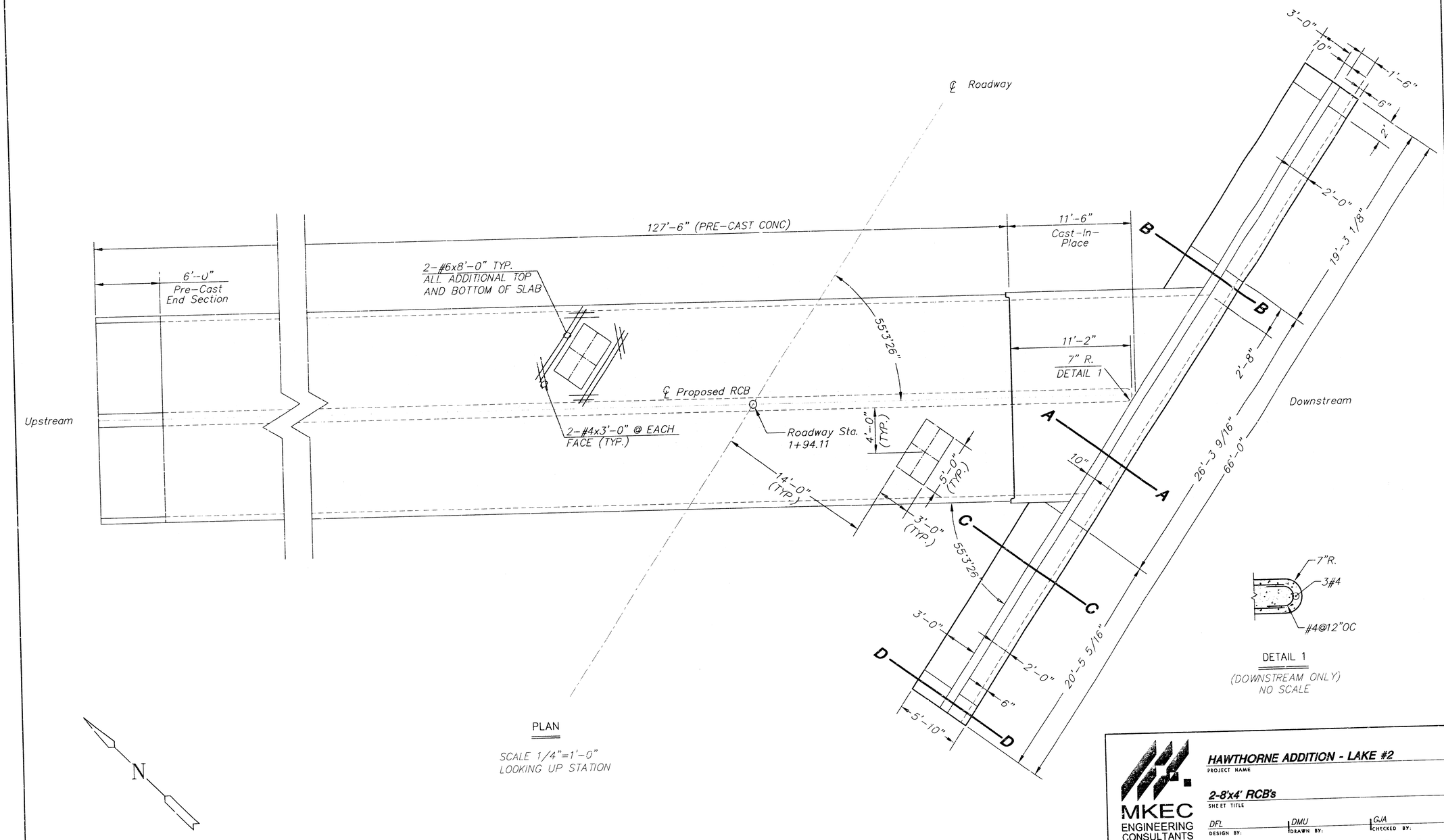

PLAN

SCALE 1/4"=1'-0"
LOOKING UP STATION

MKEC
ENGINEERING
CONSULTANTS
411 N. WEBB ROAD
WICHITA, KS. 67206
316 - 684 - 9600

HAWTHORNE ADDITION - LAKE #2
PROJECT NAME

2-8'x4' RCB's
SHEET TITLE

DFL	DMU	GJA
DESIGN BY:	DRAWN BY:	CHECKED BY:
JANUARY 2004	02167	5 / 15
DATE	JOB NO.	SHEET/OF

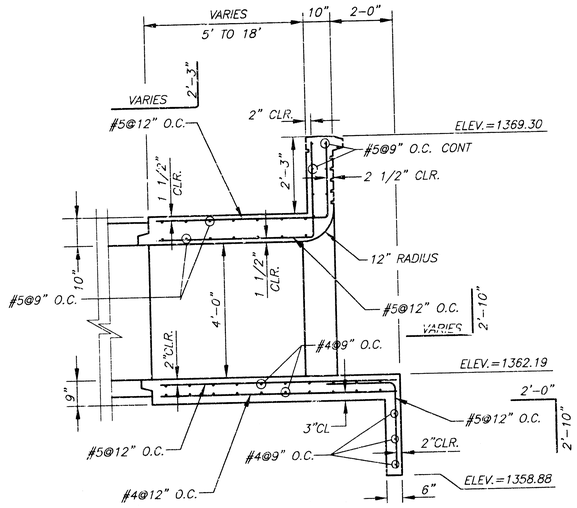

SECTION A-A
SCALE 1/2"=1'-0"

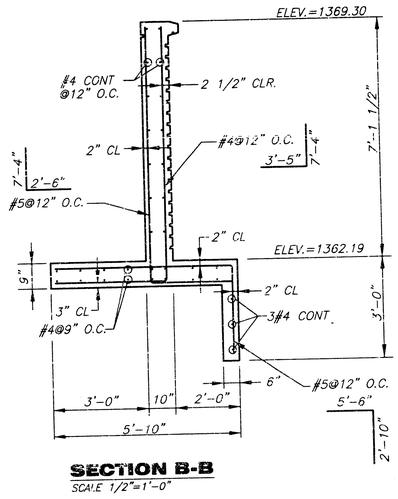

SECTION B-B
SCALE 1/2"=1'-0"

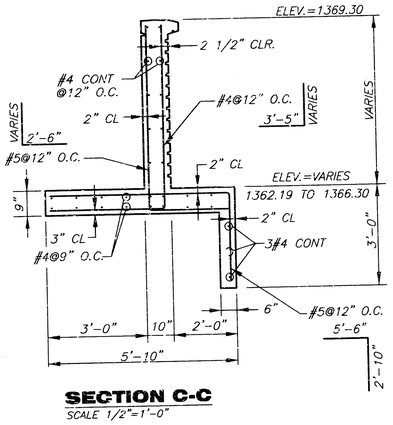

SECTION C-C
SCALE 1/2"=1'-0"

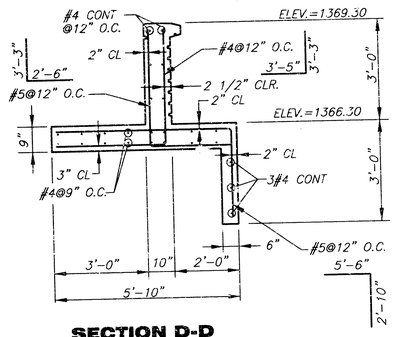

SECTION D-D
SCALE 1/2"=1'-0"

H:\CIVIL\02167\DWG\SWS\PECKHAM(B)\RCB\02167RD4.DWG

MKEC ENGINEERING CONSULTANTS
411 N. WEBB ROAD
WICHITA, KS. 67206
316 - 684 - 9600

HAWTHORNE ADDITION - LAKE #2
PROJECT NAME

HEADWALL SECTIONS & DETAILS
SHEET TITLE

DESIGN BY:	DRAWN BY:	CHECKED BY:
DFL	DMU	KJS
DATE	JOB NO.	SHEET/OF
JANUARY 2004	02167	6 / 15

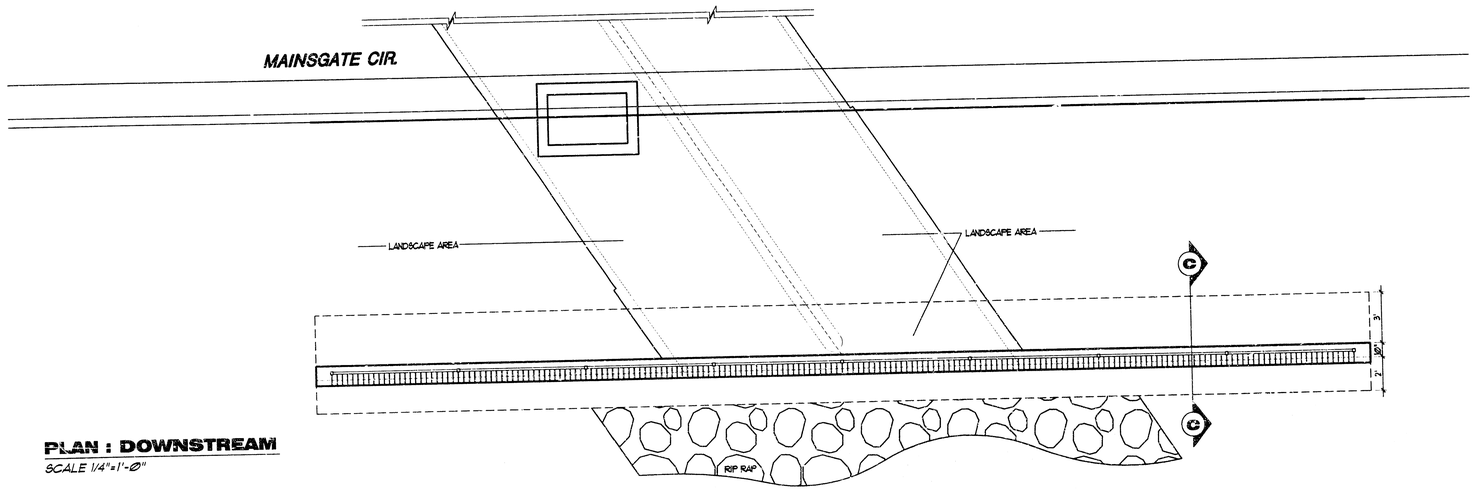

PLAN : DOWNSTREAM
SCALE 1/4"=1'-0"

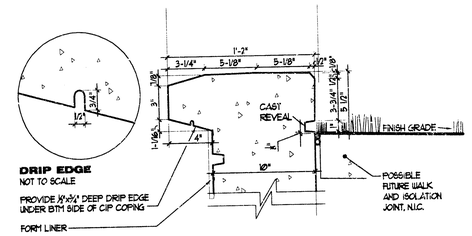

CAST-IN-PLACE HEADWALL COPING
SCALE 1"=1'-0"

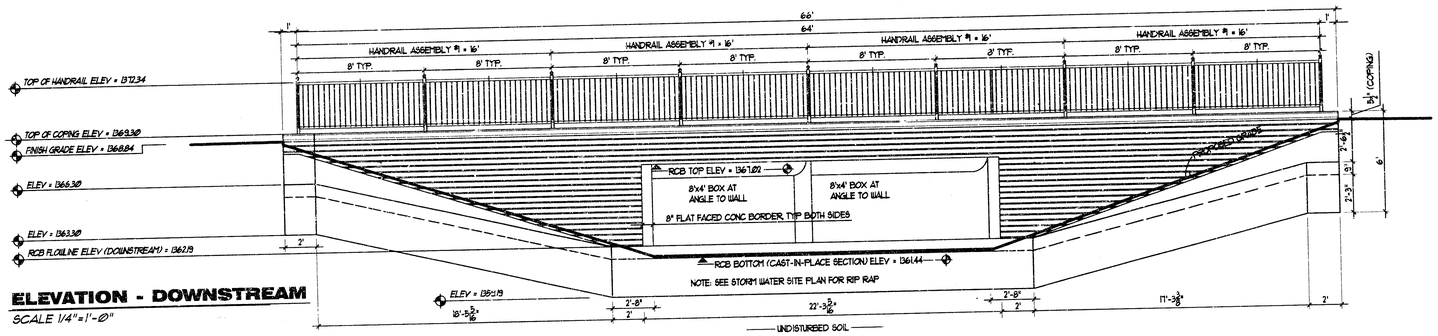

ELEVATION - DOWNSTREAM
SCALE 1/4"=1'-0"

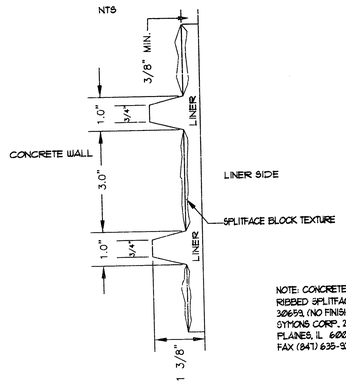

NOTE: CONCRETE FORM LINER TO BE RIBBED SPLITFACE BLOCK, #P/C 30659, (NO FINISH), AVAILABLE FROM SYMONS CORP., 200 E. TOUHY AVE, DES PLAINES, IL 60018, PH (847) 298-3200, FAX (847) 635-9287

CONCRETE FORM LINER
NTS

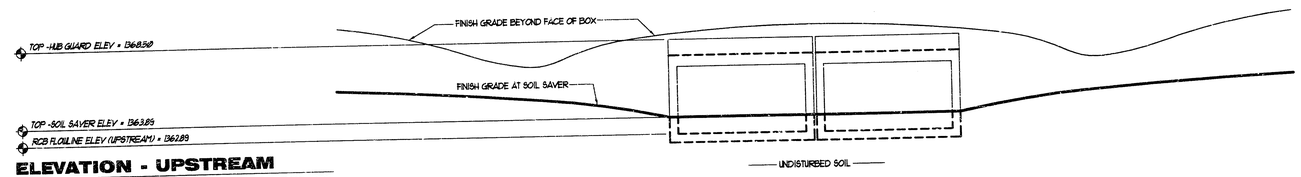

ELEVATION - UPSTREAM
SCALE 1/4"=1'-0" **(SQUARE TO END OF BOXES)**

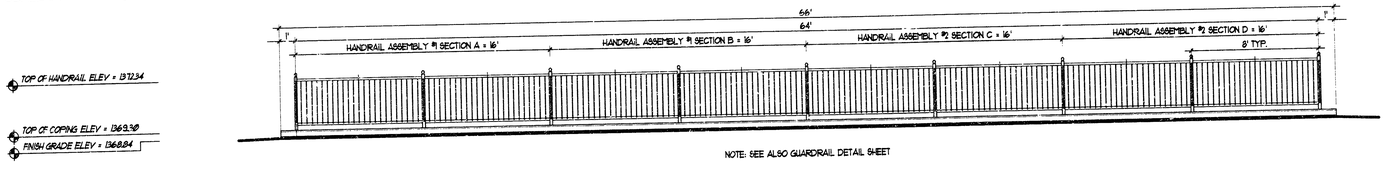

NOTE: SEE ALSO GUARDRAIL DETAIL SHEET

ELEVATION - ROADSIDE (DOWNSTREAM)
SCALE 1/4"=1'-0"

H:\CIVIL\02167\DWG\SWS\PECKHAM (B)\RCB\02167-HDWALL.DWG

MKEC ENGINEERING CONSULTANTS
411 N. WEBB ROAD
WICHITA, KS. 67206
316 - 684 - 9600

HAWTHORNE ADDITION
PROJECT NAME

LAKE #2 - RCB HEADWALL PLAN & ELEVATION
SHEET TITLE

MKEC	RJD	MKEC
DESIGN BY:	DRAWN BY:	CHECKED BY:
JANUARY, 2003	02167	7 / 15
DATE	JOB NO.	SHEET/OF

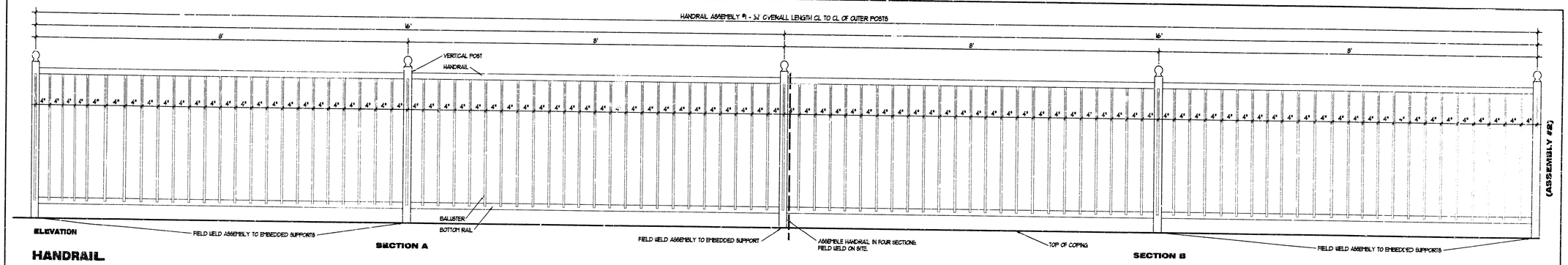

HANDRAIL ASSEMBLY #1

SCALE 1"=1'-0"

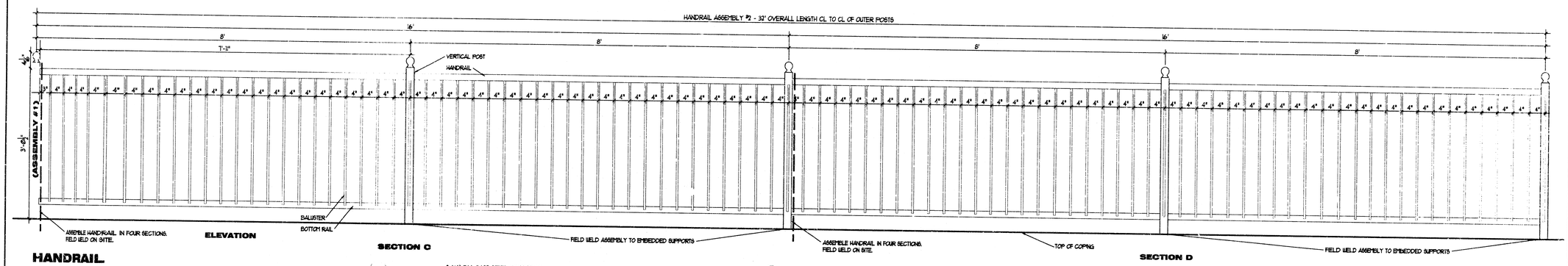

HANDRAIL ASSEMBLY #2

SCALE 1"=1'-0"

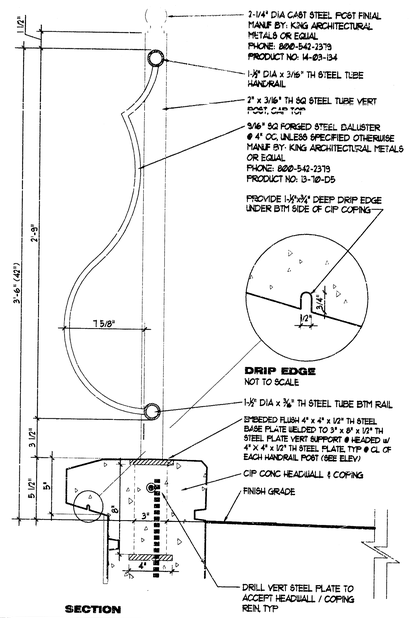

DRIP EDGE
NOT TO SCALE

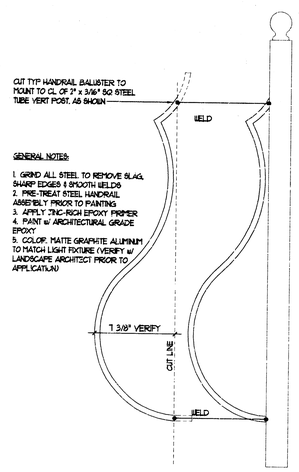

ELEVATION - VERTICAL POST

HANDRAIL ASSEMBLY

NOT TO SCALE

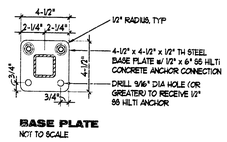

BASE PLATE
NOT TO SCALE

MKEC ENGINEERING CONSULTANTS
411 N. WEBB ROAD
WICHITA, KS. 67206
316 - 684 - 9600

HAWTHORNE ADDITION
PROJECT NAME

LAKE #2 - RCB GUARDRAIL DETAILS
SHEET TITLE

MKEC	RJD	MKEC
DESIGN BY:	DRAWN BY:	CHECKED BY:
JANUARY, 2004	02167	8 / 15
DATE	JOB NO.	SHEET/OF

H:\CIVIL\02167\DWG\SWS\PECKHAM (B)\RCB\02167-HDWALL-DET1.DWG

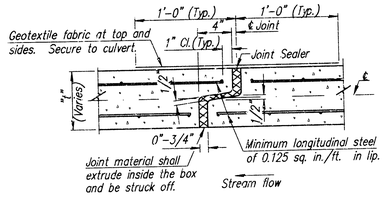

OPTION "A"

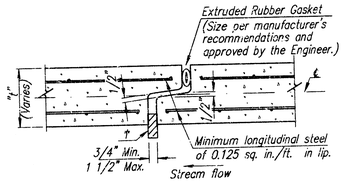

OPEN JOINT DETAIL

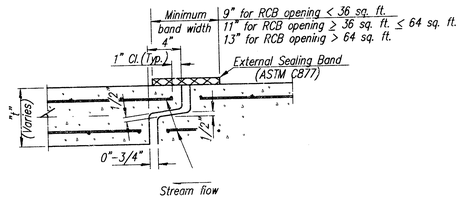

OPTION "B"

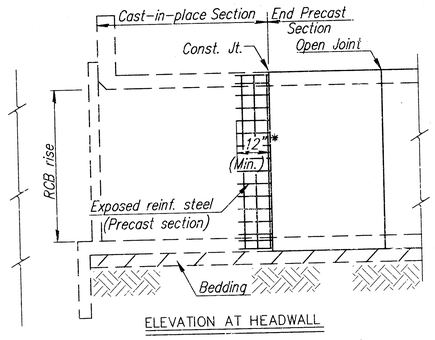

ELEVATION AT HEADWALL

(End unit using combination of cast-in-place and precast sections.)

* EXPOSED REINFORCING STEEL IN THE WALL AND THE TOP & BOTT. SLABS

GENERAL NOTES

PRECAST BOX CULVERTS: If precast box culverts are specified, they shall be constructed at the locations shown in the plans and according to the requirements shown on this sheet. When approved by the Engineer, precast box culverts may be constructed in lieu of cast-in-place box culverts. When the precast option is chosen by the Contractor, the cast-in-place quantities shall be used as the basis of payment which shall include all labor, equipment, materials, and incidentals necessary to complete the installation.

Unless otherwise approved by the Engineer, cast-in-place collars shall be required at horizontal and vertical changes in RCB alignment. Cast-in-place end sections and wingwalls are required except as noted on this sheet. Cast-in-place sections may be required at the direction of the Engineer at junctions of drainage structures.

Cast-in-place concrete work shall be done in accordance with the KDOT Specifications and KDOT's "Guidelines for Structural Design and Detail of Reinforced Concrete Box Culverts". Class AAA (AE) Concrete and Grade 60 Reinforcing Steel shall be used for the cast-in-place construction.

SPECIFICATIONS: Single-cell Precast Concrete Box Culverts shall conform to the requirements of the following specifications except as noted in the KDOT Specifications. Multiple-cell Precast Boxes shall be designed in accordance with the criteria used to develop the single-cell precast boxes. (See the latest AASHTO Specifications.)

Condition	Min. Fill	AASHTO	Equiv. ASTM
2 Ft. or more fill	2 Ft.	M259, Table 2	C789, Table 2
Less than 2 Ft. fill	0 Ft.	M273, Table 2	C850, Table 2

FABRICATION: Prior to fabrication, the Contractor shall furnish shop drawings to the Engineer for review. Shop drawings shall detail all phases of construction including layout, joint details, lifting devices, casting methods, construction placement and details of any cast-in-place segments or transitions that may be required. Copies of overheight and overload permits, when required, shall be submitted with the shop drawings.

The following information shall be legibly marked on an inside face of each box section by waterproof paint or other approved means:

a) Date of manufacture
b) Name or trademark and location of the manufacturer
c) Weight of box section in tons
d) Piece mark
e) The top of the box

CONSTRUCTION REQUIREMENTS: Foundation preparation shall be in accordance with KDOT Specifications except that a minimum 6 inch thickness of crushed stone for backfill or 3 inch seal course shall be provided. Choice of bedding shall be at the Contractor's option and approved by the Engineer.

Precast concrete box culvert shall be laid with the groove end of each section upstream, and the sections shall be tightly joined. Joint shall be sealed with an approved bituminous mastic material and geotextile or sealing band or an extruded rubber gasket, installed in accordance with the recommendations of the manufacturer. Lifting holes shall be plugged with a precast plug, sealed and covered with mastic or mortar.

H:\CIVIL\02167\DWG\SWS\CAMDEN_CHASE\RCB\02167DD2.DWG

MKEC ENGINEERING CONSULTANTS
411 N. WEBB ROAD
WICHITA, KS. 67206
316-684-9600

HAWTHORNE ADDITION - LAKE #2
PROJECT NAME

PRECAST DETAILS
SHEET TITLE

DRK	RJD	DRK
DESIGN BY:	DRAWN BY:	CHECKED BY:
JANUARY 2004	02167	9 / 15
DATE	JOB NO.	SHEET/OF

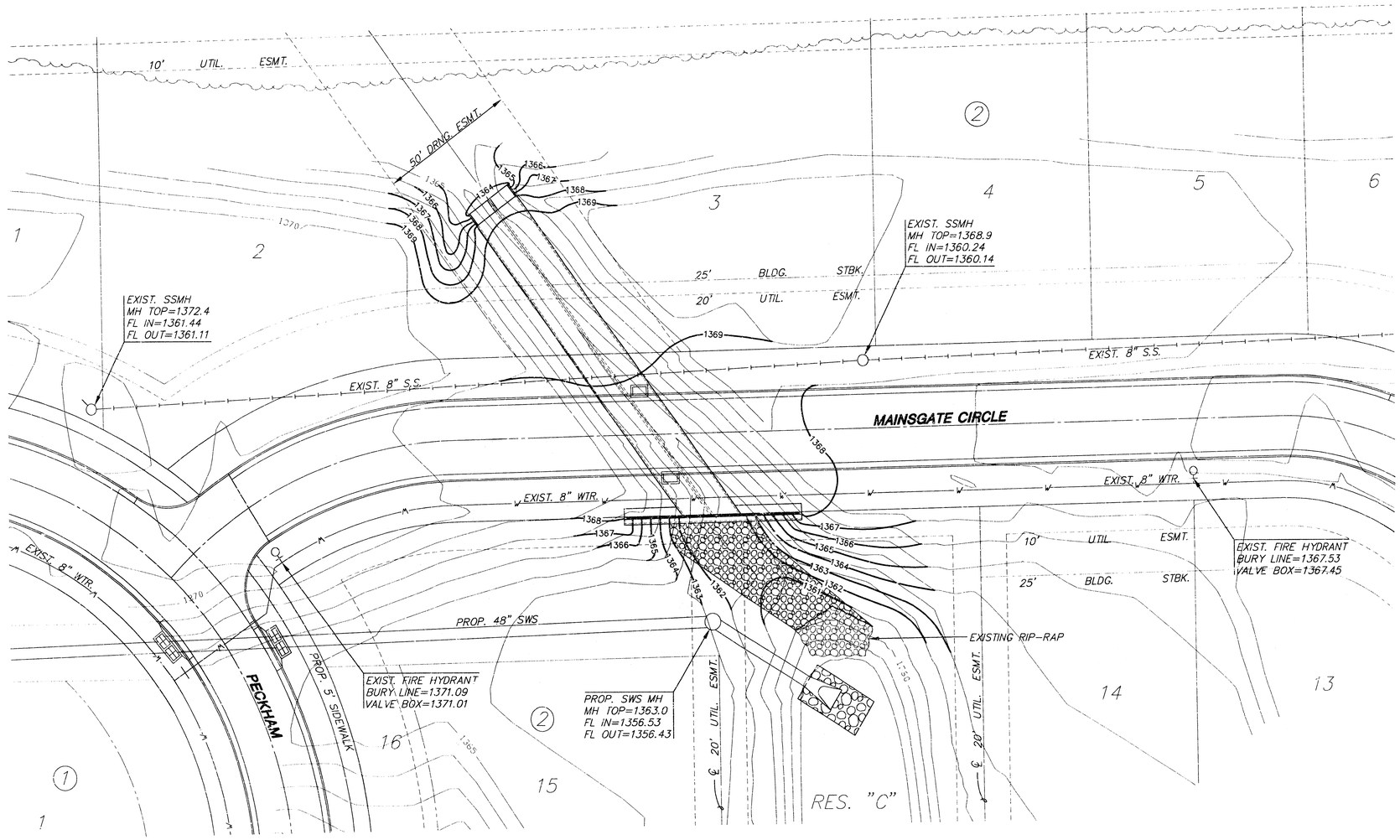

N

SCALE: 1"=20'

20 10 0 20

FOR INFORMATION ONLY

GRADING

COMP. FILL..... 450 C.Y.

COST FOR EARTHWORK SHALL BE SUBSIDIARY TO PROJECT. IF EXCAVATION FOR BOX DOES NOT PROVIDE ENOUGH DIRT FOR EARTHWORK CONTRACTOR SHALL BE RESPONSIBLE FOR ACQUIRING BALANCE OFF SITE.

H:\CIVIL\02167\DWG\SWS\PECKHAM (B)\RCB\02167GRD1.DWG

MKEC ENGINEERING CONSULTANTS
411 N. WEBB ROAD
WICHITA, KS. 67206
316 - 684 - 9600

HAWTHORNE ADDITION-LAKE #2
PROJECT NAME

GRADING PLAN
SHEET TITLE

BSH	JAH	ASH
DESIGN BY:	DRAWN BY:	CHECKED BY:
JANUARY 2004	02167	10 / 15
DATE	JOB NO.	SHEET/OF

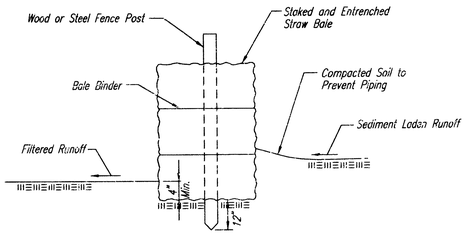

STRAW BALE BARRIERS

Material Specification:

Bale slope barriers may be constructed of wheat straw, oat straw, prairie hay, or bromegrass hay that is free of weeds declared noxious by the Kansas State Board of Agriculture.
The stakes used to anchor the bales should be a hardwood material with the following minimum dimensions: 2" square (nominal) by 4' long.

Placement:

A slope barrier should be used at the toe of a slope when a ditch does not exist. The slope barrier should be placed on nearly level ground 5' to 10' away from the toe of a slope. The barrier is placed away from the toe of the slope to provide adequate storage for settling out sediment.
When practicable, bale slope barriers should be placed along contours to avoid a concentration of flow.
Bale slope barriers can also be placed along right-of-way fence lines to keep sediment from crossing onto adjacent property. When placed in this manner, the slope barrier will not likely follow contours.

Proper installation method:

Excavate a trench the length of the planned slope barrier that is 4" deep and a bale's width wide. Make sure that the trench is excavated along a single contour. When practicable, slope barriers should be placed along contours to avoid a concentration of flow. Place the soil on the upslope side of the trench for later use.
Place the bales in the trench, making sure that they are butted tightly. Two stakes should be driven through each bale along the centerline of the ditch check, approximately 6" to 8" in from the bale ends. Stakes should be driven at least 12" into the ground.
Once all the bales have been installed and anchored, place the excavated soil against the upslope side of the check and compact it. The compacted soil should be no more than 3" to 4" deep.

List of common placement/installation mistakes to avoid:

When practicable, do not place bale slope barriers across contours. Slope barriers should be placed along contours to avoid a concentration of flow. Concentrated flow over a slope barrier creates a scour hole on the downslope side of the barrier. The scour hole eventually undermines the bales and the barrier fails.
Do not place bale slope barriers in areas with shallow soils underlain by rock. If the barrier is not anchored sufficiently, it will wash out.
Bale slope barriers must be dug into the ground. Bales at ground level do not work because they allow water to flow under the barrier.

Inspection and Maintenance:

Bale slope barriers should be inspected every 7 days and within 24 hours of a rainfall of 1/2" or more. The following is a list of questions that should be addressed during each inspection:

Are there any points along the slope barrier where water is concentrating?
Does water flow under the slope barrier?
Does water flow through spaces between abutting bales?
Are any bales dislodged?
Are bales decomposing due to age and/or water damage?
Does sediment need to be removed from behind the slope barrier?

NOTE: Point A must be higher than Point B so that water flows over the bales and not around them.

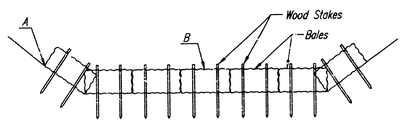

STRAW BALE DITCH CHECKS

Material Specification:

Bale ditch checks may be constructed of wheat straw, oat straw, prairie hay, or bromegrass hay that is free of weeds declared noxious by the Kansas State Board of Agriculture.
The stakes used to anchor the bales should be a hardwood material with the following minimum dimensions: 2" square (nominal) by 4' long.
Optional: The downstream scour apron should be constructed of a double-netted straw erosion-control blanket at least 6' wide.
Optional: The metal landscape staples used to anchor the erosion-control blanket should be at least 8" long.

Placement:

Bale ditch checks should be placed perpendicular to the flowline of the ditch.
The ditch check should extend far enough so that the ground level at the ends of the check is higher than the top of the lowest center bale. This prevents water from flowing around the check.
Checks should not be placed in ditches where high flows are expected. Rock checks should be used instead.
Bales should be placed in ditches with slopes of 6% or less. For slopes steeper than 6%, rock checks should be used.
The following table provides check spacing for a given ditch grade:

Ditch grade (%)	Check Spacing (feet)
0.5	200
1.0	200
2.0	100
3.0	65
4.0	50
5.0	40
6.0	30

Proper installation method:

Excavate a trench perpendicular to the ditch flowline that is 4" deep and a bale's width wide. Extend the trench in a straight line along the entire length of the proposed ditch check. Place the soil on the upstream side of the trench-it will be used later.
Optional: On the downstream side of the trench, roll out a length of erosion-control blanket (scour apron) equal to the length of the trench. Place the upstream edge of the erosion-control blanket along the bottom upstream edge of the trench. The erosion control blanket should be anchored in the trench with one row of 8" landscape staples placed on 18" centers. The remainder of the erosion-control blanket (the portion that is not lying in the trench) will serve as the downstream scour apron. This section of the blanket should be anchored to the ground with 8" landscape staples placed around the perimeter of the blanket on 18" centers. The remainder of the blanket should be anchored using two evenly spaced rows of 8" landscape staples on 18" centers placed perpendicular to the flowline of the ditch.
Place the bales in the trench, making sure that they are butted tightly. Two stakes should be driven through each bale along the centerline of the ditch check, approximately 6" to 8" in from the bale ends. Stakes should be driven at least 12" into the ground.
Once all the bales have been installed and anchored, place the excavated soil against the upstream side of the check and compact it. The compacted soil should be no more than 3" to 4" deep and extend upstream no more than 24".

List of common placement/installation mistakes to avoid:

Do not place a bale ditch check directly in front of a culvert outlet. It will not stand up to the concentrated flow.
Do not place bale ditch checks in ditches that will likely experience high flows. They will not stand up to concentrated flow.
Follow prescribed ditch-check spacing guidelines. If spacing guidelines are exceeded, erosion will occur between the ditch checks.
Do not allow water to flow around the ditch check. Make sure that the ditch check is long enough so that the ground level at the ends of the check is higher than the top of the lowest center bale.
Do not place bale ditch checks in channels with shallow soils underlain by rock. If the check is not anchored sufficiently, it will wash out.
Bale ditch checks must be dug into the ground. Bales at ground level do not work because they allow water to flow under the check.

Inspection and Maintenance:

Bale ditch checks should be inspected every 7 days and within 24 hours of a rainfall of 1/2" or more. The following is a list of questions that should be addressed during each inspection:

Does water flow around the ditch check?
Does water flow under the ditch check?
Does water flow through spaces between abutting bales?
Are any bales and/or scour aprons (optional) dislodged?
Are bales decomposing due to age and/or water damage?
Does sediment need to be removed from behind the ditch check?

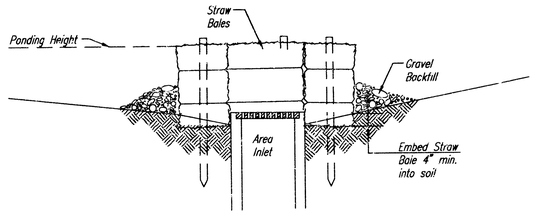

SECTION A-A

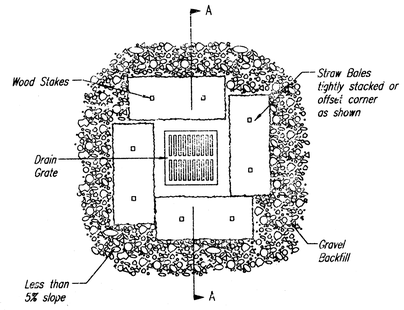

STRAW BALE BARRIERS FOR AREA INLETS
(INLET PROTECTION)

Material Specification:

Bale area inlet barriers should be constructed of wheat straw, oat straw, prairie hay, or bromegrass hay that is free of weeds declared noxious by the Kansas State Board of Agriculture.
The stakes used to anchor the bales should be a hardwood material with the following minimum dimensions: 2" square (nominal) by 4' long.

Placement:

Bale area inlet barriers should be placed directly around the perimeter of a drop inlet. When a bale area inlet barrier is located near an inlet that has steep approach slopes, the storage capacity behind the barrier is drastically reduced. Timely removal of sediment must occur for a barrier to operate properly in this location.

Proper installation Method:

Excavate a trench around the perimeter of the area inlet that is at least 4" deep by a bale's width wide.
Place the bales in the trench, making sure that they are butted tightly. Some bales may need to be shortened to fit into the trench around the area inlet. Two stakes should be driven through each bale, approximately 6" to 8" in from the bale ends.
Stakes should be driven at least 12" into the ground.
Once all the bales have been installed and anchored, place the excavated soil against the receiving side of the barrier and compact it. The compacted soil should be no more than 3" to 4" deep.
Note: When a bale area inlet barrier is placed in a shallow median ditch, make sure that the top of the barrier is not higher than the paved road. In this configuration, water may spread onto the roadway causing a hazardous condition.

List of common placement installation mistakes to avoid:

Bales should be placed directly against the perimeter of the area inlet. This allows overtopping water to flow directly into the inlet instead of onto nearby soil causing scour.
Bale area inlet barriers must be dug into the ground. Bales at ground level do not work because they allow water to flow under the barrier.

Inspection and Maintenance:

Bale area inlet barriers should be inspected every 7 days and within 24 hours of a rainfall 1/2" or more. The following is a list of questions that should be addressed during each inspection:

Does water flow under the area inlet barrier?
Does water flow through spaces between abutting bales?
Are any bales dislodged?
Are bales decomposing due to age and/or water damage?
Does sediment need to be removed from behind the area inlet barrier?

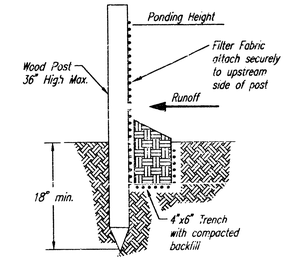

SILT FENCE BARRIERS

SILT FENCE BARRIERS

Material Specification:

Silt fence fabric should conform to the AASHTO M288 96 silt fence specification.
The posts used to support the silt fence fabric should be a hardwood material with the following minimum dimensions: 2" square (nominal) by 4' long.
Silt fence fabric should be attached to the wooden posts with staples, wire, zip ties, or nails.

Placement:

A slope barrier should be used at the toe of a slope when a ditch does not exist. The slope barrier should be placed on nearly level ground 5' to 10' away from the toe of a slope. The barrier is placed away from the toe of the slope to provide adequate storage for setting out sediment.
When practicable, silt fence slope barriers should be placed along contours to avoid a concentration of flow.
Silt fence slope barriers can also be placed along right-of-way fence lines to keep sediment from crossing onto adjacent property. When placed in this manner, the slope barrier will not likely follow contours.

Proper installation method:

Excavate a trench the length of the planned slope barrier that is 6" deep by 4" wide.
Make sure that the trench is excavated along a single contour. When practicable, slope barriers should be placed along contours to avoid a concentration of flow. Place the soil on the upslope side of the trench for later use.
Roll out a continuous length of silt fence [illegible] on the downslope side of the trench.
Place the edge of the fabric in the trench s[illegible], at the top upslope edge. Line all three sides of the trench with the fabric. Backfill over the fabric in the trench with the excavated soil and compact. After filling the trench, approximately 24" to 36" of silt-fence fabric should remain exposed.
Lay the exposed silt fence upslope of the trench to clear an area for driving in the posts. Just downslope of the trench, drive posts into the ground to a depth of at least 18".
Place posts no more than 4' apart.
Attach the silt fence to the anchored post with staples, wire, zip ties, or nails.

List of common placement/installation mistakes to avoid:

When practicable, do not place silt fence slope barriers across contours. Slope barriers should be placed along contours to avoid a concentration of flow. When the flow concentrates, it overtops the barrier and the silt fence slope barrier quickly deteriorates.
Do not place silt-fence posts on the upslope side of the silt fence fabric. In this configuration, the force of the water is not restricted by the posts, but only by the staples (wire, zip ties, nails, etc.). The silt fence will rip and fail.
Do not place silt fence slope barriers in areas with shallow soils underlain by rock. If the barrier is not sufficiently anchored, it will wash out.
Silt fence slope barriers must be dug into the ground-silt fence at ground level does not work because water will flow underneath.

Inspection and Maintenance:

Silt fence slope barriers should be inspected every 7 days and within 24 hours of a rainfall of 1/2" or more. The following is a list of questions that should be addressed during each inspection:

Are there any points along the slope barrier where water is concentrating?
Does water flow under the slope barrier?
Do the silt fences sag excessively?
Has the silt fence torn or become detached from the posts?
Does sediment need to be removed from behind the slope barrier?

H:\CIVIL\32167\DWG\SWS\PECKHAM(B)\RCB\BMP_1.DWG

CITY OF WICHITA

SOIL EROSION BMP DETAILS

CHRISTOPHER M. CARRIER, P.E.
STORM WATER ENGINEER

PROJECT NUMBER	OCA NO.
468-83517	751360
DATE: JAN 2004	SHEET 11 OF 15

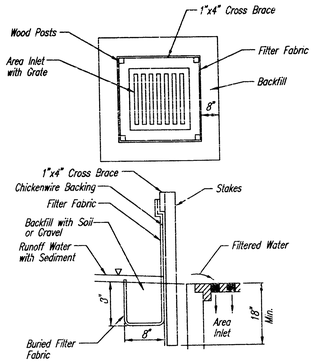

SILT FENCE BARRIERS FOR AREA INLETS
(INLET PROTECTION)

Material Specification:

Silt fence fabric should conform to the AASHTO M288 96 silt fence specification.
The wire or polymeric mesh backing used to help support the silt fence fabric should conform to the AASHTO M288 96 silt fence specification.
The posts used to support the silt fence fabric should be a hardwood material with the following minimum dimensions: 2" square (nominal) by 4' long.
The material used to frame the tops of the posts should be 1" by 4" boards.
Silt fence fabric and support backing should be attached to the wooden posts and frame with staples, wire, zip ties, or nails.

Placement:

Place a silt fence drop inlet barrier in a location where it is unlikely to be overtopped.
Water should flow through silt fence, not over it. Silt fence barriers for area inlets often fail when repeatedly overtopped.
When used as a barrierfor area inlets, silt fence fabric and posts must be supported at the top by a wooden frame.
When a silt fence barrier for area inlets is located near an inlet that has steep approach slopes, the storage capacity behind the barrier is drastically reduced. Timely removal of sediment must occur for a barrier to operate properly in this location.

Proper installation method:

Excavate a trench around the perimeter of the area inlet that is at least 8" deep by 8" wide.
Drive posts to a depth of at least 18" around the perimeter of the area inlet.
The distance between posts should be 4' or less. If the distance between two adjacent corner posts is more than 4', add another post(s) between them.
Connect the tops of all the posts with a wooden frame made of 1" by 4" boards. Use nails or screws for fastening.
Attach the wire or polymeric-mesh backing to the outside of the post/frame structure with staples, wire, zip ties, or nails.
Roll out a continuous length of silt fence fabric long enough to wrap around the perimeter of the area inlet. Add more length for overlapping the fabric joint. Place the edge of the fabric in the trench, starting at the outside edge of the trench. Line all three sides of the trench with the fabric. Backfill over the fabric in the trench with the excavated soil and compact. After filling the trench, approximately 24" to 36" of silt fence fabric should remain exposed.
Attach the silt fence to the outside of the post/frame structure with staples, wire, zip ties, or nails. The joint should be overlapped to the next post.

Note: When a silt fence barrier for area inlet is placed in a shallow median ditch, make sure that the top of the barrier is not higher than the paved road. In this configuration, water may spread onto the roadway causing a hazardous condition.

List of common placement/installation mistakes to avoid:

Water should flow through a silt fence barrier for area inlet-not over it. Place a silt fence barrier for area inlet in a location where it is unlikely to be overtopped. Silt fence barrier for area inlets often fail when repeatedly overtopped.
Do not place posts on the outside of the silt fence barrier for area inlet. In this configuration, the force of the water is not resisted by the posts, but only by the staples (wire, zip-ties, nails, etc.). The silt fence will rip and fail.
Do not install silt fence barrier for area inlets without framing the top of the posts. The corner posts around area inlets are stressed in two directions whereas a normal silt fence is only stressed in one direction. This added stress requires more support.

Inspection and Maintenance:

Silt fence barrier for area inlets should be inspected every 7 days and within 24 hours of a rainfall of 1/2" or more. The following is a list of questions that should be addressed during each inspection:

Does water flow under the silt fence?
Does the silt fence sag excessively?
Has the silt fence torn or become detached from the posts?
Does sediment need to be removed from behind the area inlet barrier?

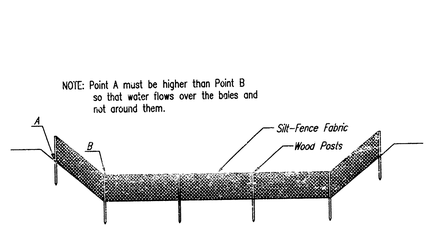

ELEVATION

SILT FENCE DITCH CHECKS
(STREAM PROTECTION)

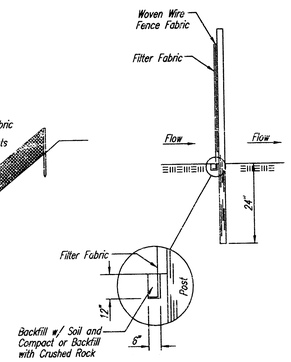

ANCHOR TRENCH DETAIL

Material Specification:

Silt fence fabric should conform to the AASHTO M288 96 silt fence specification.
The posts used to support the silt fence fabric should be a hardwood material with the following minimum dimensions: 2" square (nominal) by 4' long.
Silt fence fabric should be attached to the wooden posts with staples, wire, zip ties, or nails.

Placement:

Place silt fence in ditches where it is unlikely that it will be overtopped.
Water should flow through a silt fence ditch check, not over it. Silt fence ditch checks often fail when overtopped.
Silt fence ditch checks should be placed perpendicular to the flowline of the ditch.
The silt fence should extend far enough so that the ground level at the ends of the fence is higher than the top of the low point of the fence. This prevents water from flowing around the check.
Checks should not be placed in ditches where high flows are expected. Rock checks should be used instead.
Silt fence should be placed in ditches with slopes of 6% or less. For slopes steeper than 6%, rock checks should be used.

The following table provides check spacing for a given ditch grade:

Ditch Check Ditch grade (%)	Spacing Check Spacing (feet)
0.5	200
1.0	200
2.0	100
3.0	65
4.0	50
5.0	40
6.0	30

Proper installation method:

Excavate a trench perpendicular to the ditch flowline that is at least 12" deep by 6" wide.
Extend the trench in a straight line along the entire length of the proposed ditch check.
Place the soil on the upstream side of the trench for later use.
Roll out a continuous length of silt fence fabric on the downstream side of the trench.
Place the edge of the fabric in the trench starting at the top upstream edge of the trench.
Line two sides of the trench with the fabric as shown on detail. Backfill over the fabric in the trench with the excavated soil and compact. After filling the trench, approximately 24" to 36" of silt fence fabric should remain exposed.
Lay the exposed silt fence on the upstream side of the trench to clear an area for driving in the posts. Just downstream of the trench, drive posts into the ground to a depth of at least 24". Place posts no more than 4' apart.
Attach the silt fence to the anchored post with staples, wire, zip ties, or nails.

List of common placement/installation mistakes to avoid:

Water should flow through a silt fence ditch check-not over it. Place silt fence in ditches where it is unlikely that it will be overtopped. Silt fence installations quickly deteriorate when water overtops them.
Do not place silt fence posts on the upstream side of the silt fence fabric. In this configuration, the force of the water is not restricted by the posts, but only by the staples (wire, zip ties, nails, etc.). The silt fence will rip and fail.
Do not place a silt fence ditch check directly in front of a culvert outlet. It will not stand up to the concentrated flow.
Do not place silt fence ditch checks in ditches that will likely experience high flows. They will not stand up to concentrated flow.
Follow prescribed ditch check spacing guidelines. If spacing guidelines are exceeded, erosion will occur between the ditch checks.
Do not allow water to flow around the ditch check. Make sure that the ditch check is long enough so that the ground level at the ends of the fence is higher than the low point on the top of the fence.
Do not place silt fence ditch checks in channels with shallow soils underlain by rock. If the check is not anchored sufficiently, it will wash out.

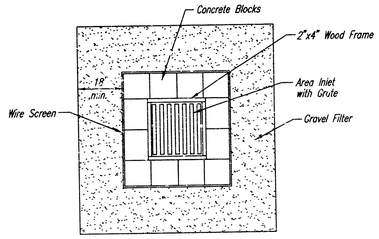

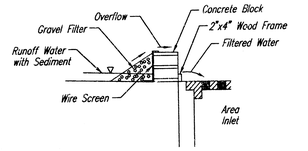

CONCRETE BLOCK FILTER FOR AREA DRAIN
(INLET PROTECTION)

Gravel barriers provide little filtering of large inflow waters. However, when installed correctly and maintained, they can effectively treat low runoff flows.

Placement of gravel filters around area drains must be completed in a manner that will not cause local flooding.

Gravel filters can be used if the immediate and adjacent area to the area drain consists of soil or pavement.

Only gravel filters are to be installed on top of the pavement.

Instructions for Installing:

STEP 1: Place concrete blocks around the grate. The blocks can be stacked one or two high and should be supported by a 2"x4" board.
STEP 2: Wrap 1/2" mesh wire screen around the concrete blocks.
STEP 3: Place 1" to 1-1/2" diameter rock around the blocks and wire screen. Be sure the rock extends down from the top of the concrete block.
STEP 4: To prevent damage to vehicles, signs warning drivers about the structures may be necessary.

An alternative method is use of gravel bags that are supported to prevent collapsing.

Use of rock having diameters smaller than 1" may result in clogging of pores and reduce the amount of water flowing into an inlet.

Maintenance:

All gravel filters installed around area drains should be inspected and repaired after each runoff event. Sediment should be removed when material is within 3" of the top of any block. Periodically, the gravel should be raked to increase infiltration and filtering of runoff waters. Accumulated sediment is to be removed immediately from roads and streets after every runoff event.

Inspection and Maintenance:

Silt fence ditch checks should be inspected every 7 days and within 24 hours of a rainfall of 1/2" or more. The following is a list of questions that should be addressed during each inspection:

Does water flow around the ditch check?
Does water flow under the ditch check?
Does the silt fence sag excessively?
Has the silt fence torn or become detached from the posts?
Does sediment need to be removed from behind the ditch check?

H:\CIVIL\02167\DWG\SWS\PECKHAM(B)\RCB\BMP_2.DWG

CITY OF WICHITA

SOIL EROSION BMP DETAILS

CHRISTOPHER M. CARRIER, P.E.
STORM WATER ENGINEER

PROJECT NUMBER	OCA NO.
468-83517	751360
DATE: JAN 2004	SHEET 12 OF 15

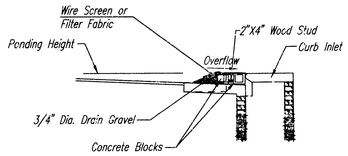

SECTION A-A

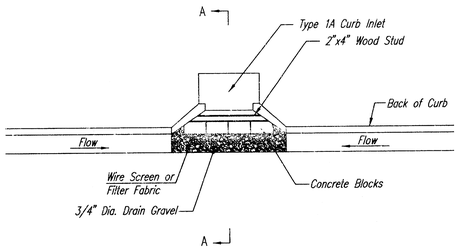

CURB INLET GRAVEL FILTERS
(INLET PROTECTION-RESIDENTIAL STREETS ONLY)

NOTE: Other types of curb inlet protection may be approved by the city so long as equal protection is provided.

A gravel inlet filter shall be installed at sump locations on residential streets. This type of protection is not to be used on arterial or collector streets at any time that it would pose an undue traffic hazard.

Instructions for installing:

STEP 1: Place concrete blocks around the inlet as shown on drawing. Insert 2x4 board as shown.
STEP 2: Wrap 1/2" mesh wire screen around the concrete blocks.
STEP 3: Place 1" to 1-1/2" diameter rock around the blocks and wire screen. Be sure the rock extends down from the top of the concrete block.
STEP 4: To prevent damage to vehicles, signs warning drivers about the structures may be necessary. An alternative installation is the use of gravel bags supported by a 2"x4" board to prevent collapsing.

Use of rock with diameters smaller than 1" in the bag may result in clogging of pores and reduce the amount of water flowing into an inlet.

Maintenance:

All curb inlet gravel filters shall be inspected and repaired after each runoff event. Sediment deposits are to be removed once material is within 8 cm (3 inches) of the top of any block. Periodically, the gravel shall be raked to increase infiltration and filtering of runoff waters. Accumulated sediment is to be removed immediately from roads and streets.

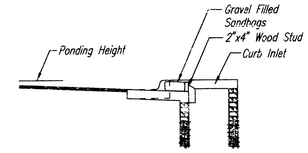

SECTION B-B

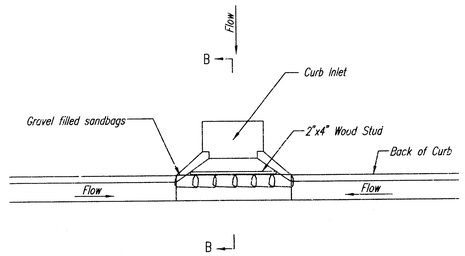

CURB INLET SANDBAG FILTERS
(INLET PROTECTION)

NOTE: Other types of curb inlet protection may be approved by the City so long as equal protection is provided.

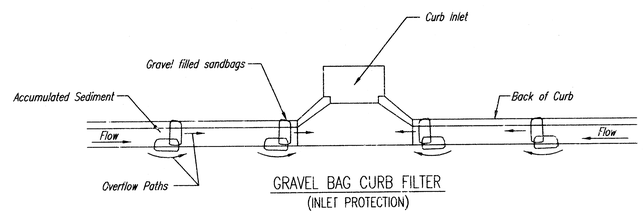

GRAVEL BAG CURB FILTER
(INLET PROTECTION)

NOTE: Place two or more sets of bags in a manner that results in maximum support. The flow line bag must be lower than top of curb.

CURB SEDIMENT TRAPS

When inlets are located on streets having a grade (i.e., sump conditions do not exist), installing gravel (or sand) bags in the gutter flow line to create small sediment traps can be considered. Gravel bags are recommended over sand bags to allow for drainage.

If the spacing between bags becomes too large, little sediment may be trapped. Spacing of bags should be completed using the table or graph that illustrates placement distances based upon street slope. When installed in the gutter, bag tops must be lower than the sidewalk.

Spacing:

Gravel bags are to be placed according to street grades using the following table or graph that appears below.

GRADE (%)	SPACING (FEET)
0.5	75
1.0	45
2.0	18
3.0	12
4.0	9
5.0	6

Maintenance:

Collected sediment shall be removed after every runoff event. Bags that are destroyed by vehicular traffic or through natural deterioration are to be immediately replaced.

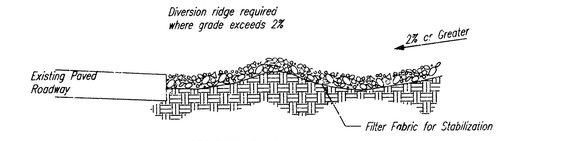

SECTION C-C

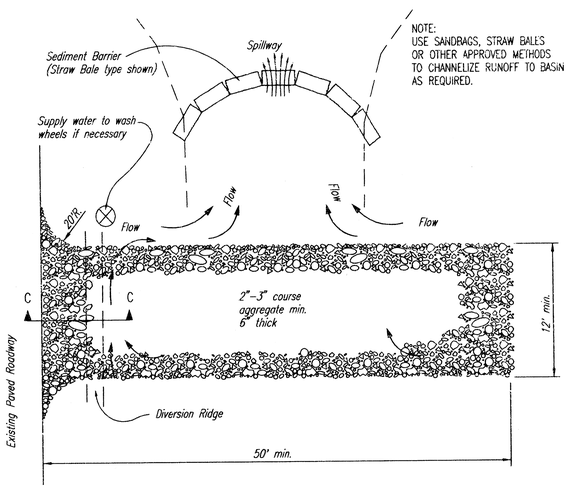

STABILIZED CONSTRUCTION ENTRANCE

NOTES:

1. THE ENTRANCE SHALL BE MAINTAINED IN A CONDITION THAT WILL PREVENT TRACKING OR FLOWING OF SEDIMENT ONTO PUBLIC RIGHTS-OF-WAY. THIS MAY REQUIRE TOP DRESSING, REPAIR AND/OR CLEANOUT OF ANY MEASURES USED TO TRAP SEDIMENT.
2. WHEN NECESSARY, WHEELS SHALL BE CLEANED PRIOR TO ENTRANCE ONTO PUBLIC RIGHT-OF-WAY.
3. WHEN WASHING IS REQUIRED, IT SHALL BE DONE ON AN AREA STABLIZED WITH CRUSHED STONE THAT DRAINS INTO AN APPROVED SEDIMENT TRAP OR SEDIMENT BASIN, AS SHOWN ABOVE.
4. DRIVE ENTRANCES ONTO RESIDENTIAL LOTS WILL NOT BE REQUIRED TO HAVE THE SEDIMENT BARRIER SHOWN, BUT WHEEL WASHING MAY BE REQUIRED IF STABILIZED ENTRANCE IS NOT SUFFICIENT TO KEEP MUD FROM BEING TRACKED ONTO ADJACENT STREET. ENTRANCE SHALL EXTEND FROM BACK OF CURB TO DWELLING.

H:\CIVIL\02167\DWG\SWS\PECKHAM(B)\RCB\BMP_3.DWG

CITY OF WICHITA

SOIL EROSION BMP DETAILS

CHRISTOPHER M. CARRIER, P.E.
STORM WATER ENGINEER

PROJECT NUMBER	OCA NO.
468-83517	751360
DATE: JAN 2004	SHEET 13 OF 15

PHASE 1 – INITIAL EARTHWORK AND UTILITIES (EXCEPT STORM SEWER)

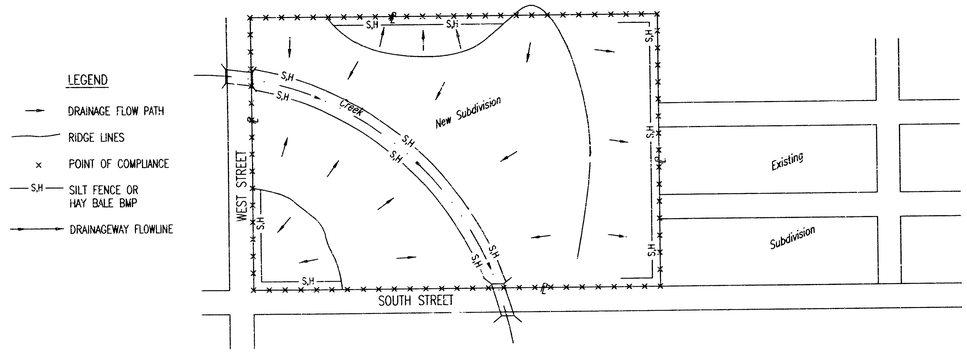

1. DURING THIS PHASE OF SUBDIVISION CONSTRUCTION, THE POINTS OF COMPLIANCE ARE THE PERIMETER BOUNDARIES AND ANY DRAINAGE WAYS OR STORM SEWERS DRAINING THROUGH OR FROM THE SITE. SHOULD LAKES BE CONSTRUCTED WITHIN THE SUBDIVISION THAT WILL DISCHARGE DURING STORMS, THEY ARE ALSO A POINT OF COMPLIANCE.
2. HAYBALES OR SILT FENCE MUST BE CONSTRUCTED ALONG THE PROPERTY LINE WHERE ON SITE WATER CAN DRAIN OFF THE PROPERTY. THESE BMP'S WILL ALSO BE INSTALLED ALONG ANY DRAINAGE DITCH OR LAKE THAT CAN DISCHARGE.
3. SHOULD SILT OR SEDIMENT ENTER THE DITCHES OR GUTTERLINES ON THE ADJACENT BOUNDRY STREETS, APPROPRIATE BMP'S WILL BE PLACED WITHIN THE SUBDIVISION TO PREVENT THIS.
4. ANY MUD TRACKED ONTO ADJACENT STREETS WILL BE REMOVED AT THE END OF EACH WORK DAY.
5. CONTRACTORS WORKING WITHIN THE SITE WILL NOT BE REQUIRED TO USE INDIVIDUAL BMP'S AS LONG AS THOSE SPECIFIED ABOVE ARE IN PLACE AND EFFECTIVE. CONTRACTORS WORKING ON THE BOUNDRY LINE STREETS OR ON ADJACENT PROPERTIES TO EXTEND UTILITIES ARE EXPECTED TO USE BMP'S AT THEIR WORK LOCATIONS, AS NEEDED.
6. UTILIZE STABILIZED CONSTRUCTION ENTRANCE AT ENTRANCE AND EXIT ONTO ANY EXISTING PUBLIC STREETS.
7. THE SUBDIVISION DEVELOPER (OWNER) SHALL INSTALL AND MAINTAIN THE ON-SITE BMP'S.

PHASE 3 – STREET CONSTRUCTION

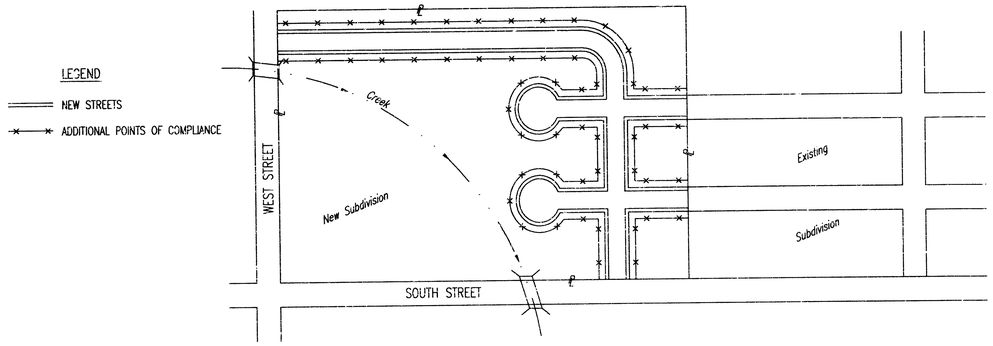

1. DURING THIS PHASE OF SUBDIVISION CONSTRUCTION, NEW STREETS ARE INSTALLED. ALL BMP'S INSTALLED DURING PHASE 1 AND 2 MUST STILL BE MAINTAINED. THE POINT OF COMPLIANCE NOW SHIFTS TO THE BACK OF CURB ALONG EACH STREET.
2. CURB OPENING INLET PROTECTION:
   A. SUMP AREAS – INLET PROTECTION SHALL BE PROVIDED WHEN STREET SUBGRADE WORK IS COMPLETED.
   B. NON-SUMP LOCATIONS – PROVIDE INLET PROTECTION AS SOON AS BASE COURSE ASPHALT IS INSTALLED, BEFORE THE SURFACE COURSE LIFT.
3. BMP'S WILL BE REQUIRED BACK OF CURB WHEREVER WATER CAN FLOW OVER THE CURB AND THE CURB HAS BEEN BACKFILLED TO WITHIN 3" OR LESS OF THE TOP OF CURB (SEE CURB BACKFILL DETAIL). FOR CURBS NOT YET ENTIRELY BACKFILLED (3" OR MORE BELOW TOP OF CURB), BMP'S WILL BE REQUIRED AT POINTS WHERE WATER BREAKS OVER CURB WHICH COULD RESULT IN THE PLACEMENT OF SEDIMENT IN THE GUTTER.
4. SEE DETAIL THIS SHEET ON BACK OF CURB PROTECTION.
5. THE BACK OF CURB PROTECTION SPECIFIED ON THIS PLAN MAY HAVE TO BE SUPPLIMENTED WITH HAY/BALE OR SILT FENCE BMP'S AT LOCATIONS WHERE CONCENTRATED FLOW RESULTS IN SEDIMENT BEING CARRIED OVER THE EXCELSIOR MATS.
6. THE STREET CONTRACTOR WILL BE RESPONSIBLE FOR INSTALLING BACK OF CURB BMP'S.
7. THE INDIVIDUAL LOT OWNERS WILL BE RESPONSIBLE FOR MAINTAINING THE BACK OF CURB BMP'S IN FRONT OF THEIR LOTS UNTIL SUCH TIME AS ADJACENT DISTURBED EARTH IS STABILIZED WITH GRASS OR SOD.

PHASE 2 – INSTALLATION OF STORM SEWER

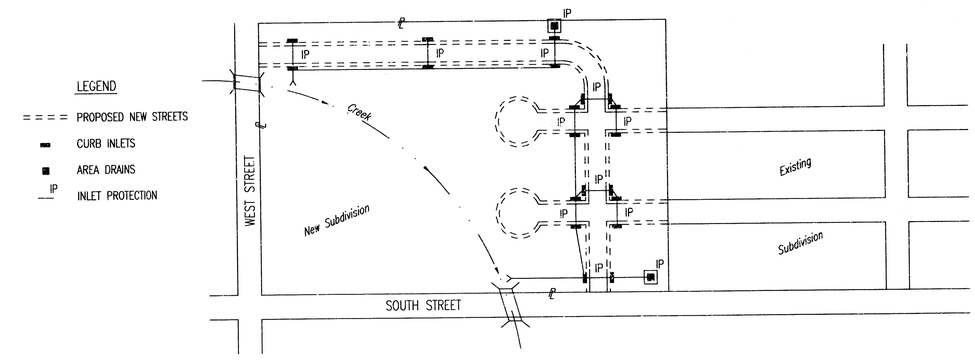

1. DURING THIS PHASE OF SUBDIVISION DEVELOPMENT, ALL BMP'S REQUIRED IN PHASE 1 SHALL REMAIN IN PLACE AND BE MAINTAINED.
2. AS NEW STORM SEWERS, WITH INLETS, ARE INSTALLED, THE STORM SEWERS MUST NOW BE PROTECTED SO ALL NEW INLETS BECOME POINTS OF COMPLIANCE.
3. AREA DRAINS – AS SOON AS WATER CAN FLOW INTO THESE DRAINS, HAYBALE OR SILT FENCE PROTECTION WILL BE INSTALLED AROUND THEM.
4. CURB OPENING INLETS – AS SOON AS WATER CAN FLOW INTO THESE DRAINS, INLET PROTECTION BMP'S MUST BE INSTALLED. SEE PHASE 3 – STREET CONSTRUCTION.
5. THE STORM SEWER CONTRACTOR WILL BE RESPONSIBLE FOR INSTALLING THESE BMP'S. IF WATER CANNOT FLOW INTO CURB INLETS UNTIL STREET CONSTRUCTION IS COMPLETE, THEN STREET CONTRACTOR WILL INSTALL INLET PROTECTION.
6. THE SUBDIVISION DEVELOPER WILL MAINTAIN THESE BMP'S ONCE INSTALLED.
7. ONCE ALL DISTURBED GROUND DRAINING TO AN INLET HAS BEEN RESTABILIZED WITH GRASS OR SOD, THE SUBDIVISION DEVELOPER WILL BE RESPONSIBLE FOR PERMANENTLY REMOVING THE INLET PROTECTION.

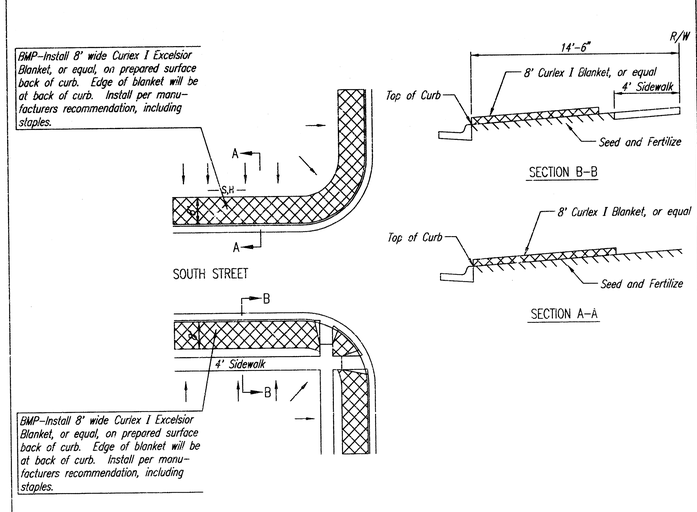

BACK OF CURB PROTECTION DETAIL

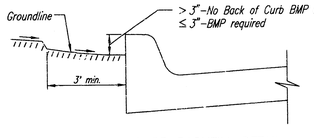

CURB BACKFILL DETAIL

GENERAL NOTES:

1. THE INTENT OF ALL BEST MANAGEMENT PRACTICES (B.M.P.'S) IS TO PREVENT ERODED SOIL FROM ENTERING DITCHES, STORM SEWERS, OR ANY OTHER DRAINAGE FEATURE.
2. THIS SHEET IS INTENDED TO PROVIDE GUIDELINES AS TO WHAT TYPE OF BMP'S WILL BE INSTALLED DURING THE CONSTRUCTION PROCESS. CONTRACTORS ARE EXPECTED TO BID PROJECTS ACCORDINGLY.
3. BMP'S SHALL BE MAINTAINED DURING THE CONSTRUCTION PROCESS TO REMAIN EFFECTIVE. MAINTENANCE SHALL BE AS INDICATED ON THE BMP DETAIL SHEETS.
4. PERSONS DESTROYING BMP'S SHALL BE RESPONSIBLE FOR IMMEDIATELY REPAIRING THEM OR INSTALLING SUITABLE REPLACEMENT BMP'S.
5. THE DEVELOPMENT OF ANY SUBDIVISION THAT DISTURBS 5 ACRES OR MORE WILL REQUIRE A FEDERAL/STATE NPDES STORMWATER PERMIT. THE PREPARATION OF A STORMWATER POLLUTION PREVENTION PLAN IS REQUIRED. EROSION CONTROL BMP'S ARE REQUIRED. THE DETAILS SHOWN ON THIS SHEET ARE THE MINIMUM STANDARDS TO BE SHOWN ON POLLUTION PREVENTION PLAN.
6. FOR SUBDIVISIONS SMALLER THAN 5 ACRES, SOIL EROSION BMP'S ARE REQUIRED. ALSO, DEVELOPERS AND CONTRACTORS ARE ENCOURAGED TO DEVELOP POLLUTION PREVENTION PLANS FOR EACH PROJECT PRIOR TO CONSTRUCTION.
7. FAILURE TO USE AND MAINTAIN BMP'S IS A VIOLATION OF SECTION 16.32 OF THE CITY CODE AND WILL SUBJECT THE SUBDIVISION DEVELOPER AND CONTRACTORS TO THE PENALTIES PROVIDED THEREIN.
8. THE APPLICATION OF BMP'S SHOWN ON THIS SHEET IS FOR SITUATIONS NORMALLY ENCOUNTERED. FROM TIME TO TIME, SITUATIONS WILL ARISE THAT MAY REQUIRE A DIFFERENT BMP OTHER THAN THAT SHOWN. BMP'S, OTHER THAN THOSE SHOWN, MAY BE UTILIZED SO LONG AS THEY ARE EFFECTIVE AND MAINTAINED.
9. A STABILIZED EARTH SURFACE IS DEFINED AS ONE THAT IS HARD SURFACED WITH CONCRETE, ASPHALT, OR THE LIKE, OR ONE ON WHICH 70% OF THE GRASS HAS GERMINATED ON THE ENTIRE SURFACE.

CITY OF WICHITA

SOIL EROSION BMPS SUBDIVISION DEVELOPMENT PROCESS

CHRISTOPHER M. CARRIER, P.E.
STORM WATER ENGINEER

PROJECT NUMBER	OCA NO.
468-83517	751360
DATE: JAN 2004	SHEET 14 OF 15

K:\CAD\SOIL EROSION\WORKING\SWS\DESIGNMANUAL\BMP-1.DWG

FINAL PLAT

HAWTHORNE ADDITION

AN ADDITION TO WICHITA, SEDGWICK COUNTY, KANSAS

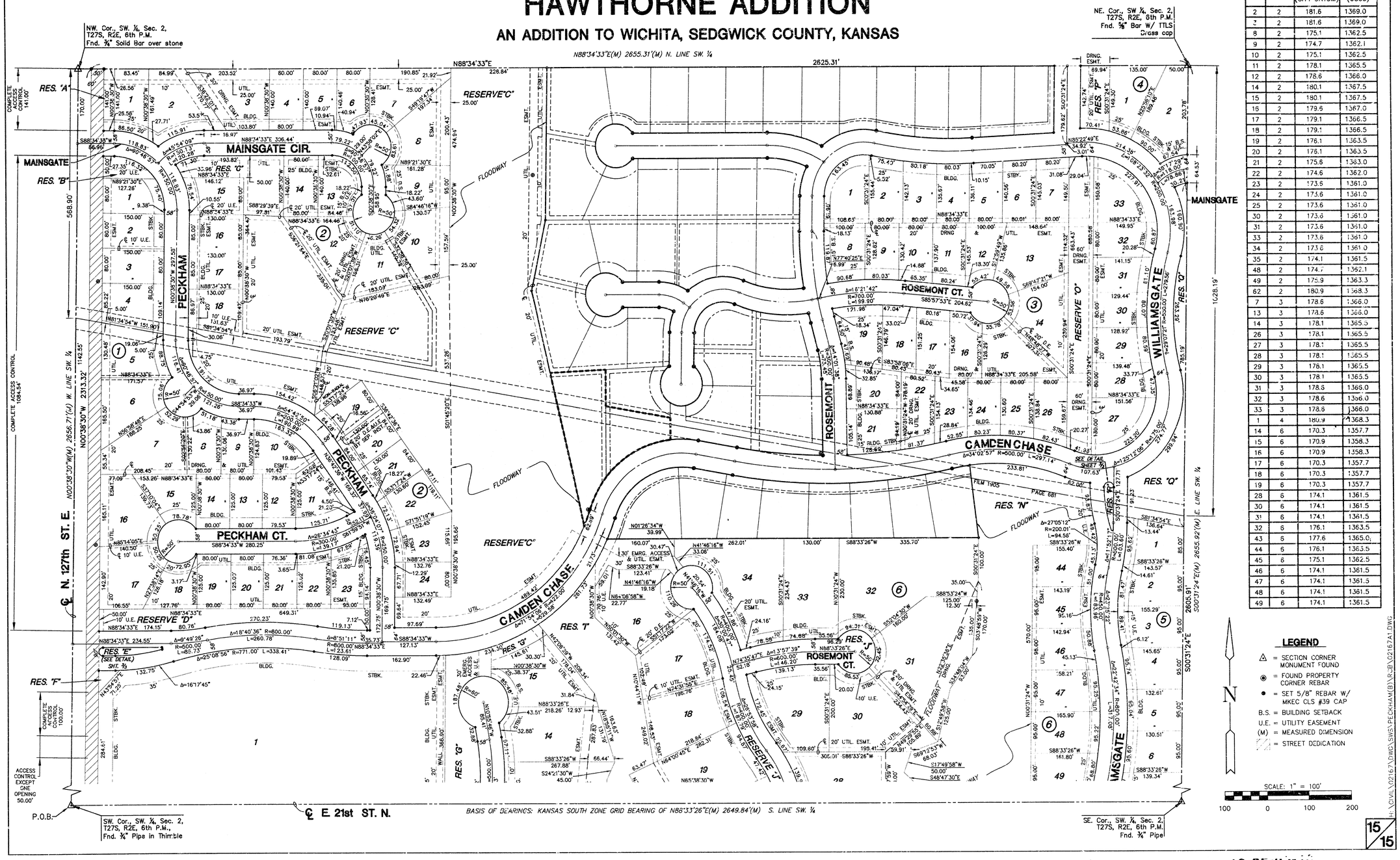

MINIMUM PAD ELEVATIONS (LOWEST OPENINGS)			
LOT	BLOCK	ELEVATION (CITY DATUM)	ELEVATION (USGS)
2	2	181.6	1369.0
7	2	181.6	1369.0
8	2	175.1	1362.5
9	2	174.7	1362.1
10	2	175.1	1362.5
11	2	178.1	1365.5
12	2	178.6	1366.0
14	2	180.1	1367.5
15	2	180.1	1367.5
16	2	179.6	1367.0
17	2	179.1	1366.5
18	2	179.1	1366.5
19	2	176.1	1363.5
20	2	176.1	1363.5
21	2	175.8	1363.0
22	2	174.6	1362.0
23	2	173.6	1361.0
24	2	173.6	1361.0
25	2	173.6	1361.0
30	2	173.6	1361.0
31	2	173.6	1361.0
33	2	173.6	1361.0
34	2	173.6	1361.0
35	2	174.1	1361.5
48	2	174.7	1362.1
49	2	175.9	1363.3
62	2	180.9	1368.3
7	3	178.6	1366.0
13	3	178.6	1366.0
14	3	178.1	1365.5
26	3	178.1	1365.5
27	3	178.1	1365.5
28	3	178.1	1365.5
29	3	178.1	1365.5
30	3	178.1	1365.5
31	3	178.6	1369.0
32	3	178.6	1366.0
33	3	178.6	1366.0
1	4	180.9	1368.3
14	6	170.3	1357.7
15	6	170.9	1358.3
16	6	170.9	1358.3
17	6	170.3	1357.7
18	6	170.3	1357.7
19	6	170.3	1357.7
28	6	174.1	1361.5
30	6	174.1	1361.5
31	6	174.1	1361.5
32	6	176.1	1363.5
43	6	177.6	1365.0
44	6	176.1	1363.5
45	6	175.1	1362.5
46	6	174.1	1361.5
47	6	174.1	1361.5
48	6	174.1	1361.5
49	6	174.1	1361.5

LEGEND

- △ = SECTION CORNER MONUMENT FOUND
- ◉ = FOUND PROPERTY CORNER REBAR
- • = SET 5/8" REBAR W/ MKEC CLS #39 CAP
- B.S. = BUILDING SETBACK
- U.E. = UTILITY EASEMENT
- (M) = MEASURED DIMENSION
- ▨ = STREET DEDICATION

H:\CIVIL\02167.DWG\SWS\PECKHAM(B)\R-B\02167A1.DWG

15/15

18-05-03-16