STORM WATER SEWER PHASE 2 PLANS FOR

THE LEGACY ADDITION

SWD # 182

PROJECT NO. 468-83351

CITY OF WICHITA, KANSAS

MICHAEL E. LINDEBAK, CITY ENGINEER

O.C.A. 751306

FEBRUARY, 2002

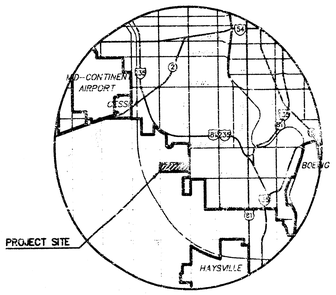

LOCATION MAP

GENERAL NOTES

1. THE CONTRACTOR SHALL BE RESPONSIBLE FOR PRESERVING PROPERTY IRONS. THE CONTRACTOR WILL BE REQUIRED TO RE-ESTABLISH ANY PROPERTY IRONS WHICH ARE DAMAGED OR DESTROYED BY HIS CONSTRUCTION OPERATIONS. SUCH IRONS SHALL BE RE-ESTABLISHED BY A LICENSED LAND SURVEYOR IN ACCORDANCE WITH STATE LAWS.

2. EXISTING UTILITIES AND THEIR LOCATIONS, AS SHOWN ON THE PLANS REPRESENT THE BEST INFORMATION OBTAINABLE FOR DESIGN. LOCATION INFORMATION HAS BEEN OBTAINED FROM THE VARIOUS UTILITY COMPANIES AND IS EITHER FROM COMPANY RECORD DRAWINGS OR COMPANY PROVIDED FIELD LOCATIONS. THE PLAN LOCATIONS SHOWN ARE NOT GUARANTEED. ADDITIONAL EXISTING UTILITIES MAY ALSO BE ENCOUNTERED.

3. CONTRACTOR WILL BE REQUIRED TO PROVIDE A MINIMUM ADVANCE NOTICE OF FORTY-EIGHT (48) HOURS TO UTILITY COMPANIES PRIOR TO STARTING ANY EXCAVATION AS FOLLOWS:

KANSAS ONE-CALL	1-800-344-7233 or 687-2470 (LOCAL WICHITA)

THE CONTRACTOR MUST NOTIFY THE FOLLOWING IN CASE OF AN EMERGENCY:

SOUTHWESTERN BELL TELEPHONE COMPANY	1-800-734-7590
CABLEVISION	262-0661
KANSAS GAS & ELECTRIC (ELECTRIC)	264-1141
KANSAS GAS & ELECTRIC (GAS)	832-3180 OR 832-3169
CITY OF WICHITA SEWER MAINTENANCE	268-4908
CITY OF WICHITA WATER DEPARTMENT	268-4908

4. RUBBLE FROM THE REMOVAL OF MISCELLANEOUS STRUCTURES AND EXCESS EXCAVATION WHICH IS TO BE WASTED SHALL BE DISPOSED OF ON SITES TO BE PROVIDED BY THE CONTRACTOR. THESE SITES SHALL BE APPROVED BY THE ENGINEER AS TO SUITABILITY, APPEARANCE AND SITE LOCATION. LOCATIONS THAT, IN THE OPINION OF THE ENGINEER, WILL LEAVE AN UNSIGHTLY APPEARANCE WILL NOT BE APPROVED. ALL DIPOSAL SITES MUST BE APPROVED BY THE KANSAS DEPARTMENT OF HEALTH AND ENVIRONMENT. MATERIAL EITHER STOCKPILED OR DISPOSED OF IN A FLOOD PLAIN WOULD REQUIRE A KANSAS STATE BOARD OF AGRICULTURE PERMIT. ANY MATERIAL DUMPED IN WATERS OF THE UNITED STATES OR WETLANDS IS SUBJECT TO U.S. CORPS OF ENGINEERS PERMITTING REGULATIONS. ANY MATERIAL BURIED OR STOCKPILED BEYOND APPROVED CONSTRUCTION LIMITS WOULD REQUIRE ADDITIONAL ARCHAEOLOGICAL INVESTIGATIONS UNLESS BURIED IN A PREVIOUSLY APPROVED BORROW LOCATION.

5. COST OF EXCAVATION, HAULING, AND DUMPING OF EXCESS EXCAVATION SHALL BE SUBSIDIARY TO THE PROJECT.

6. TREES AND SHRUBS IN PUBLIC RIGHT-OF-WAY WHICH ARE IN DIRECT CONFLICT WITH PROPOSED NEW CONSTRUCTION SHALL BE REMOVED BY THE CONTRACTOR WITH THE ENGINEER'S APPROVAL. TREES AND SHRUBS WHICH ARE NOT IN DIRECT CONFLICT WITH PROPOSED NEW CONSTRUCTION SHALL BE SAVED AND PROTECTED FROM DAMAGE.

7. ALL DISTURBED AREAS TO BE SEEDED WITH RYE GRASS AT A RATE OF 200 LBS./ ACRE WITHIN 10 DAYS OF CONSTRUCTION. COST SHALL BE SUBSIDIARY TO PROJECT.

8. REVERSE CURB INLET TOPS. PAVEMENT IN THIS AREA WILL BE BUILT AT FUTURE DATE. COST OF REVERSING INLET TOPS SHALL BE SUBSIDIARY TO THE INLET CONSTRUCTION.

9. CONTRACTOR SHALL LEAVE EXCESS MATERIAL ON SITE IN A LOCATION DESIGNATED BY THE OWNER. LOCATION WILL BE WITHIN THE BENEFIT DISTRICT BOUNDARY. MATERIAL SHALL BE PLACED ADJACENT TO ROAD RIGHT-OF-WAYS WITHIN LOTS. MATERIAL SHALL BE PLACED IN LIFTS NO GREATER THEN 8" AND SHALL BE SMOOTH SO GRASS MAY BE PLANTED.

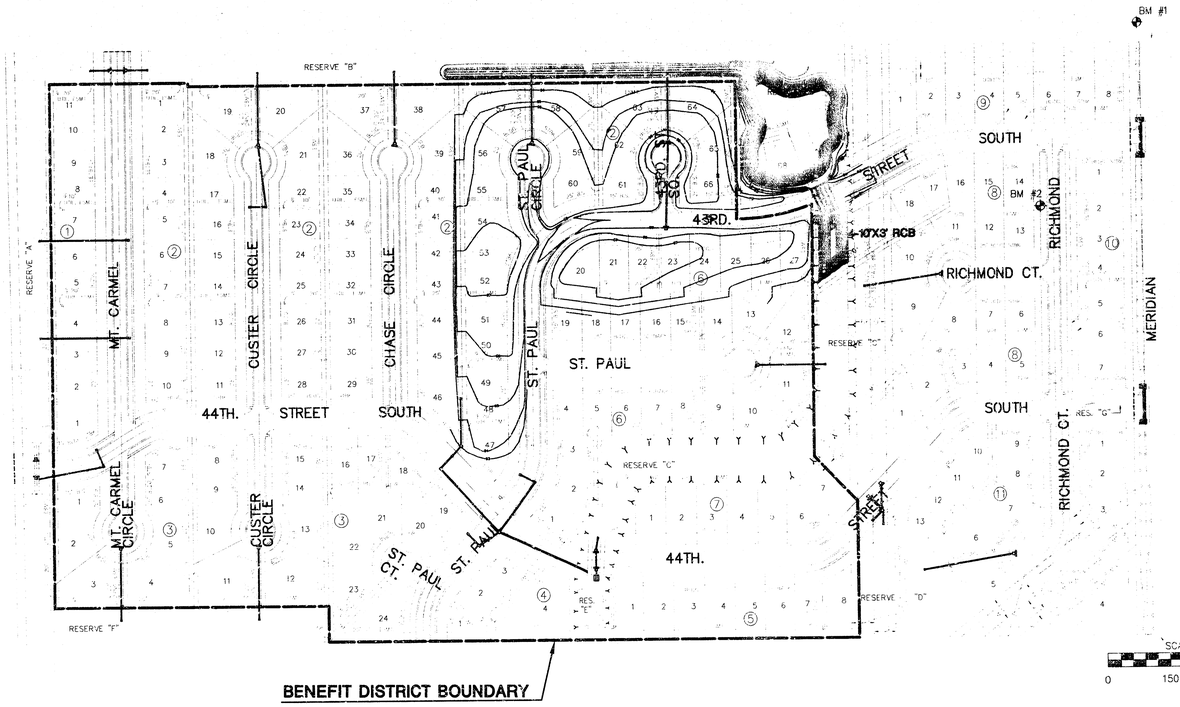

INDEX TO DRAWINGS

SHEET NO.	DESCRIPTION
1	TITLE SHEET
2	SITE GRADING
3	GRADING DETAILS
4	RCB PLAN & PROFILE
5-6	DITCH REGRADING PLAN & PROFILE
7-11	RCB DETAILS
12	CURB INLET DETAILS
13-17	EROSION CONTROL DETAILS
18	FINAL PLAT

BOOKED
4-19-03
MCG
C-247

EARTHWORK SUMMARY	
EXCAVATION (PONDS)	25,900 C.Y.
EXCAVATION (DITCH GRADING)	1,716 C.Y.
COMPACTED FILL	24,590 C.Y.

NOTE:
- NO SHRINKAGE/EXPANSION FACTORS WERE FIGURED INTO EARTHWORK QUANTITIES MEASURED.

BENCHMARK

BM #1 MERIDIAN AND 43RD. ST. SOUTH
C.O.W. BENCHMARK. 44' N. & 30' E. OF 1/4 SEC. COR.
ELEV.= 93.396

BM#2 TOP OF IRON AT NORTHEAST CORNER OF LOT 13, BLOCK 8
ELEV.=95.42

MID-KANSAS ENGINEERING CONSULTANTS, INC.
411 N. WEBB ROAD
WICHITA, KS. 67206
316-684-9600

THE LEGACY
PROJECT NAME
STORM WATER SEWER PLANS PHASE 2
SHEET TITLE

DK	DM/	GJA
DESIGN BY:	DRAWN BY:	CHECKED BY:
JANUARY 2002	01264DT	1 / 18
DATE	JOB NO.	SHEET/OF

16296
2/4/02
KANSAS
PROFESSIONAL ENGINEER

G:\CIVIL\SPECIAL\01264W\01264D.DWG Wed Feb 06 09:06:50 2002

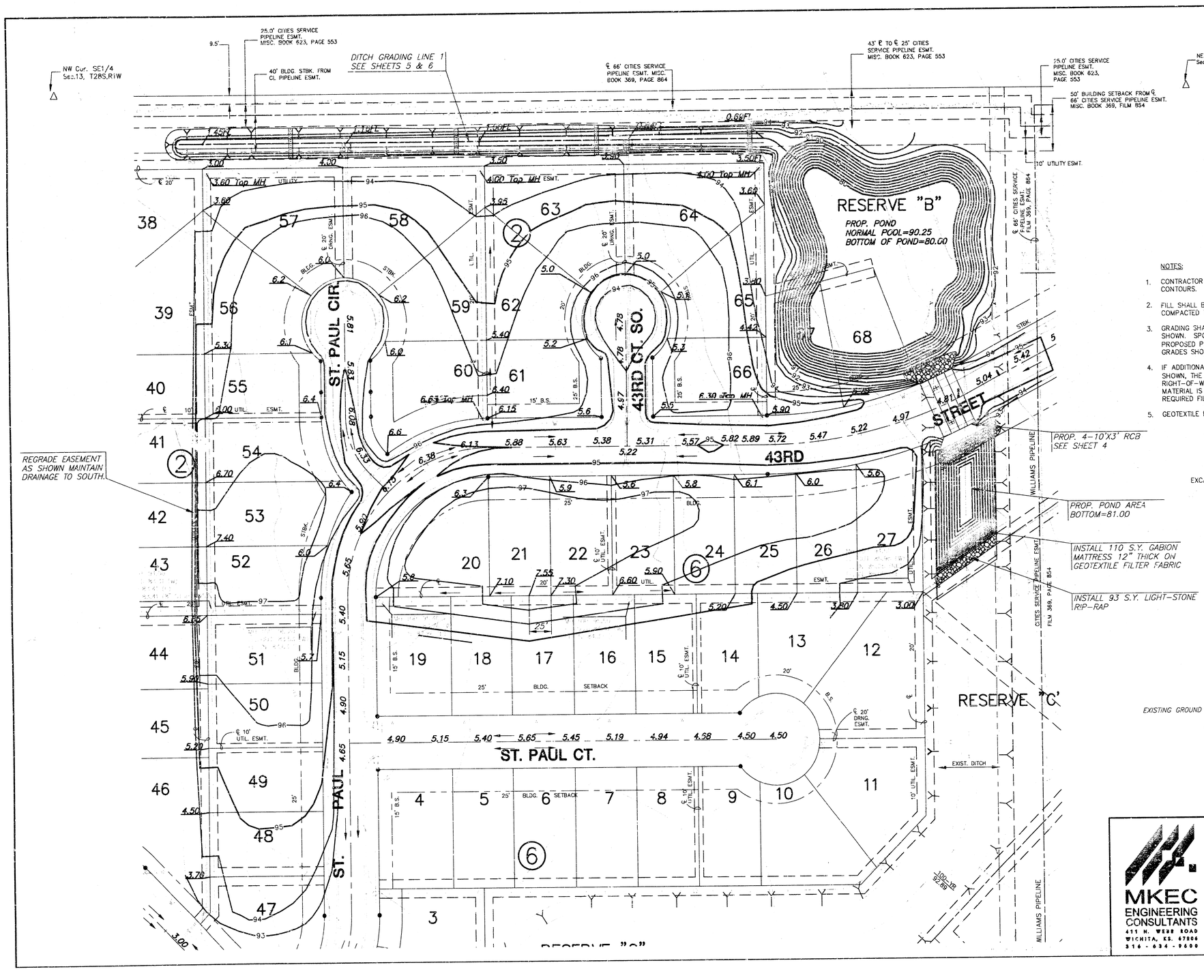

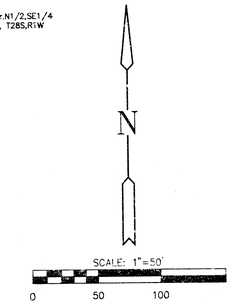

NOTES:

1. CONTRACTOR TO PLACE EXCAVATION FROM POND AS SHOWN BY PROPOSED CONTOURS.
2. FILL SHALL BE PLACED IN LIFTS NO GREATER THAN 8" AND SHALL BE COMPACTED TO 95% STD. DENSITY. SEE SHEET 3 FOR GRADING DETAILS.
3. GRADING SHALL BE COMPLETED WITHIN 0.3 FEET OF PROPOSED GRADES AS SHOWN. SPOT GRADES SHOWN ON CENTERLINE OF STREETS ARE TOP OF PROPOSED PAVEMENT. TOP OF SUBGRADE SHALL BE 10" BELOW SPOT GRADES SHOWN.
4. IF ADDITIONAL MATERIAL IS AVAILABLE UPON COMPLETION OF GRADING AS SHOWN, THE MATERIAL SHALL BE SPREAD ON THE ST. PAUL/43RD. STREET RIGHT-OF-WAY, AND THEN ACROSS LOTS 4-19, BLOCK 6. IF REQUIRED MATERIAL IS NOT AVAILABLE TO COMPLETE THE GRADING AS SHOWN, REQUIRED FILL ON LOTS 47-51, BLOCK 2 SHALL BE ELIMINATED.
5. GEOTEXTILE FABRIC SHALL BE TREVIRA SPUNBOUND 1125 OR EQUAL.

EARTHWORK QUANTITIES:

EXCAVATION (PONDS) = 25,900 C.Y.
EXCAVATION (DITCH GRADING) = 1,716 C.Y.
COMPACTED FILL = 24,590 C.Y.

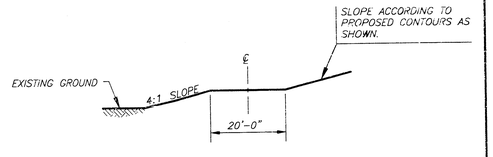

TYPICAL SECTION - EASEMENT GRADING

MKEC ENGINEERING CONSULTANTS
411 N. WEBB ROAD
WICHITA, KS. 67206
316-634-9600

THE LEGACY - PHASE 2
PROJECT NAME

SITE GRADING
SHEET TITLE

DK	GJR	DK
DESIGN BY:	DRAWN BY:	CHECKED BY:
JANUARY 2002	POND#GR	2 / 18
DATE	JOB NO.	SHEET/OF

G:\CIVIL\95136\0264\GRAD\POND-GR.DWG Wed Feb 06 09:08:22 2002

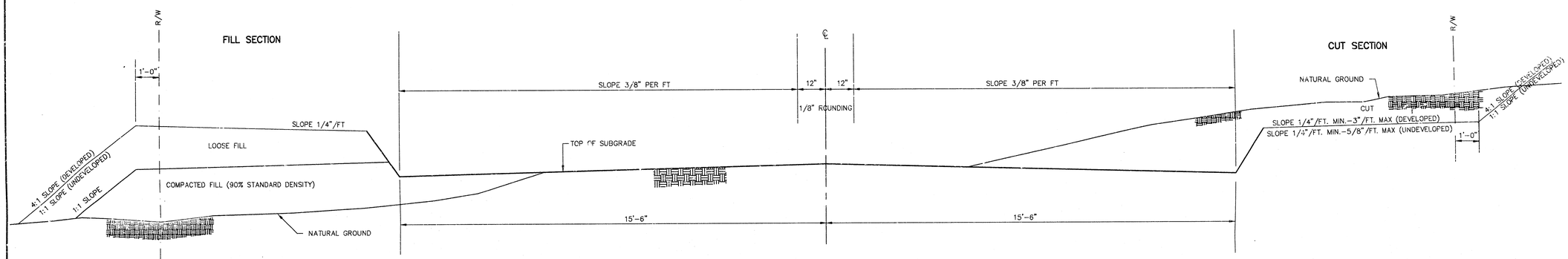

TYPICAL 29' B-B STREET GRADING DETAIL

(43RD ST. CT. SOUTH & ST. PAUL CIR.)

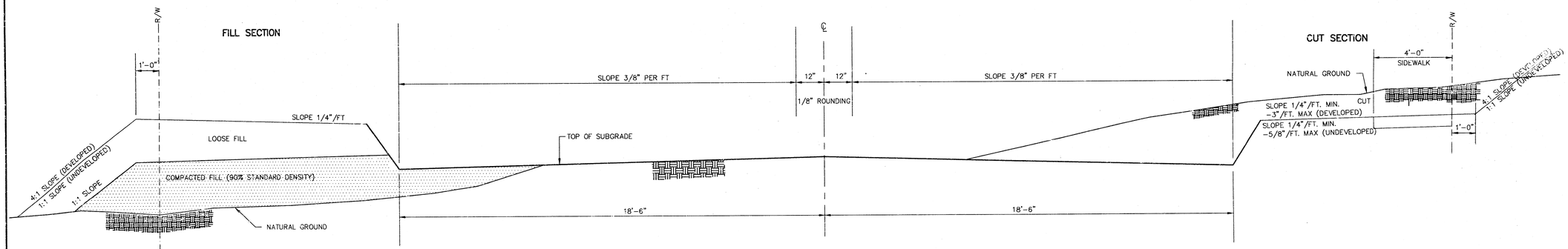

TYPICAL 35' STREET GRADING DETAIL

(43RD ST. / ST. PAUL ST.)

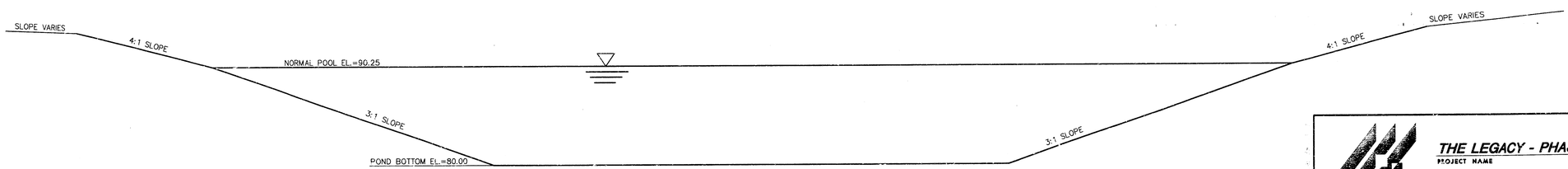

TYPICAL POND DETAIL

MKEC ENGINEERING CONSULTANTS
411 N. WEBB ROAD
WICHITA, KS. 67206
316 - 684 - 9600

THE LEGACY - PHASE 2
PROJECT NAME

GRADING DETAILS
SHEET TITLE

DK	DM	DK
DESIGN BY:	DRAWN BY:	CHECKED BY:
JANUARY 2002	01264DD6	3 / 18
DATE	JOB NO.	SHEET/OF

G:\CIVIL\95138\01264\BRIDGE\01264DD6.DWG Wed Feb 06 09:09:17 2002

THE LEGACY ADDITION
STORM WATER SEWER PLANS
PHASE 2

STA. 50+00, ℄ DITCH RCB=
ST. STA. 16+54.14, 43RD. ST. SO.
INSTALL 4-10'x3'x64' RCB
W/WINGWALLS
U.S. FL=89.50
D.S. FL=89.38
SEE SHEETS 8 - 12

43RD.
64' R/W
16+00
34' F-F

INSTALL 50 S.Y. LIGHT
STONE RIP-RAP

TYPE 1A CURB INLET
ST. STA. 16+48.70, 20.67' LT.
L=6'-4", W=4'-4"
TOP EL.=94.83

50+00

49+00

STA. 49+53.44, RCB

INSTALL 93 S.Y. LIGHT
STONE RIP-RAP

INSTALL 50 S.Y. LIGHT
STONE RIP-RAP

17+00 ST.

TYPE 1A CURB INLET
ST. STA. 16+48.70, 20.67' RT.
L=6'-4", W=4'-4"
TOP EL.=94.83

SOUTH

92 93 94 95

SCALE: 1"=20'
20 10 0 20

PLAN RCB
SCALE: 1"=20'

PROFILE RCB
SCALE: HORIZ. 1"=20'
SCALE: VERT. 1"=5'

STA. 49+68
4-10'x3' RCB

STA. 50+32
4-10'x3' RCB

PROP. PAVEMENT

CL 43RD. ST. SO.

EX. 8" WATER
TOP=87.00

EX. 8" SAN. SEW.
FL=85.51

LIGHT-STONE
RIP-RAP

12" THICK
GABION
MATTRESS

EXIST. GROUND

NORMAL POOL
=90.25

100YR. WTR. EL
=93.33

NORMAL POOL
=90.25

LIGHT-STONE
RIP-RAP

PROP. GROUND

POND BOTTOM=81.00

POND BOTTOM=80.00

64 L.F. 4-10'X3' RCB
@ 0.19%

FL=89.38

FL=89.50

100 95 90 85 80

49 50 51

4/18

G:\C:\TILL\95138\0126\45RIDGE\0126401.DWG Wed Feb 06 09:10:31 2002

THE LEGACY ADDITION
STORM WATER SEWER PLANS
PHASE 2

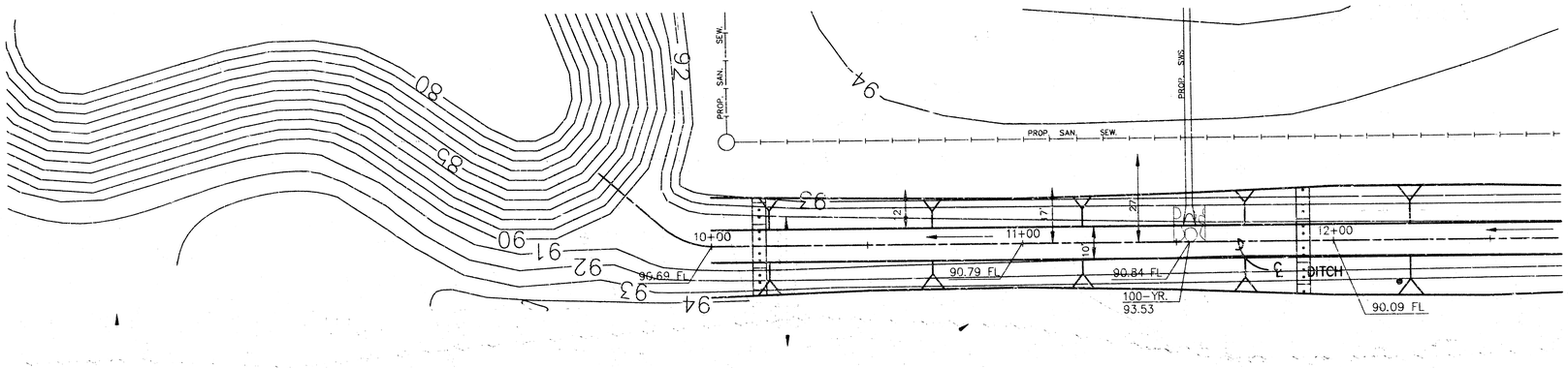

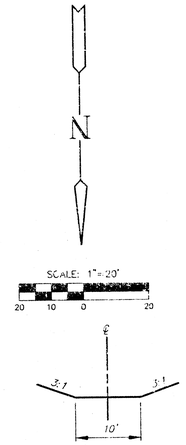

TYPICAL DITCH CROSS SECTION
NTS

PIPELINE CONTACT INFORMATION:
SEMINOLE TRANSPORTAION AND GATHERING INC.
GLEN COLLUM – R/W MANAGER
11501 S. I-44 SERVICE ROAD
OKLAHOMA CITY, OK. 73173
PH. (405)-692-5120

EARTHWORK QUANTITIES:
EXCAVATION = 1,716 C.Y.
FILL = 0 C.Y.

LEGEND
– HAY BALE SEDIMENT BARRIER

PLAN DITCH GRADING-LINE 1

SCALE: 1"=20'

PROFILE DITCH GRADING-LINE 1

SCALE: HORIZ. 1"=20'
SCALE: VERT. 1"=5'

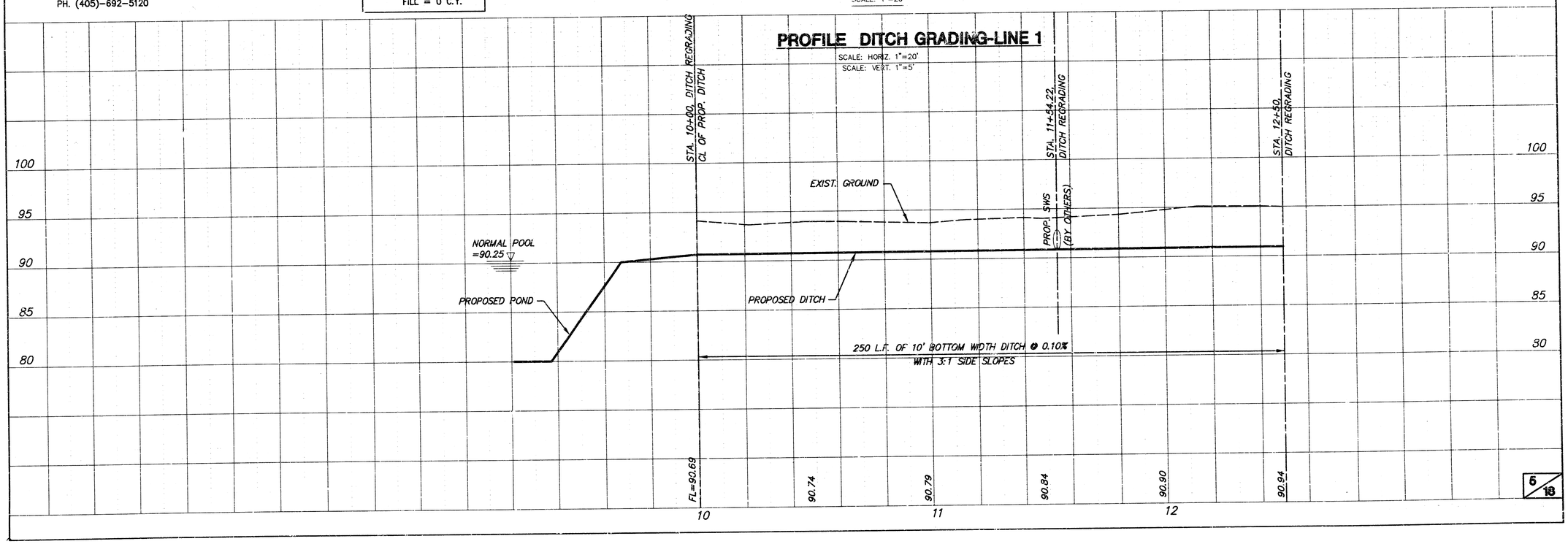

G:\CIVIL\95138\01264\BRIDGE\0126402.DWG Wed Feb 06 09:11:30 2002

THE LEGACY ADDITION
STORM WATER SEWER PLANS
PHASE 2

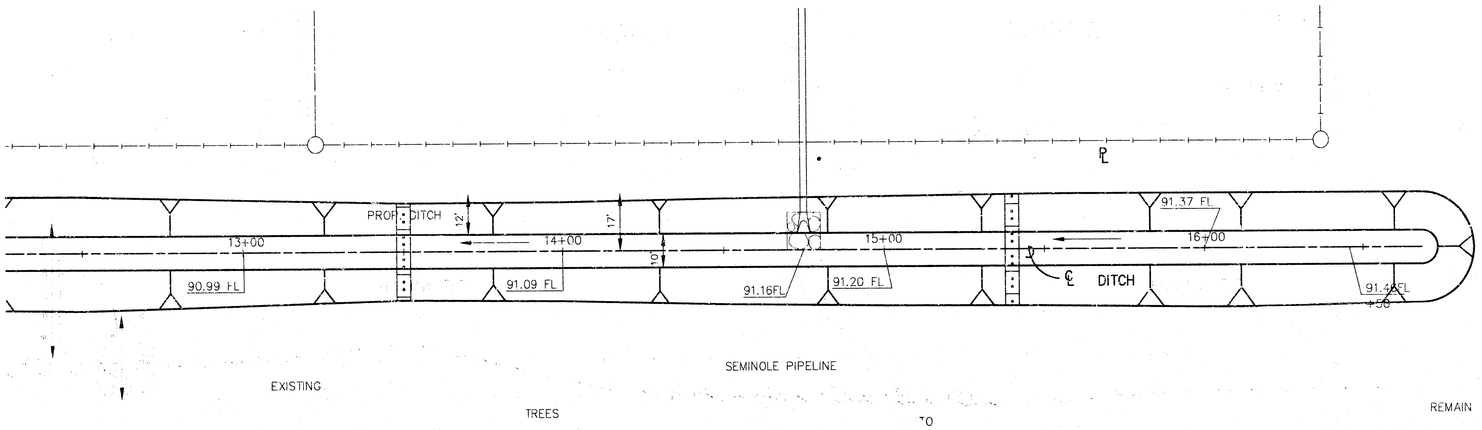

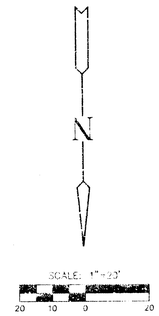

PLAN DITCH GRADING

SCALE: 1" =20'

LEGEND

⋯⋯ – HAY BALE SEDIMENT BARRIER

PROFILE DITCH GRADING

SCALE: HORIZ. 1"=20'
SCALE: VERT. 1"=5'

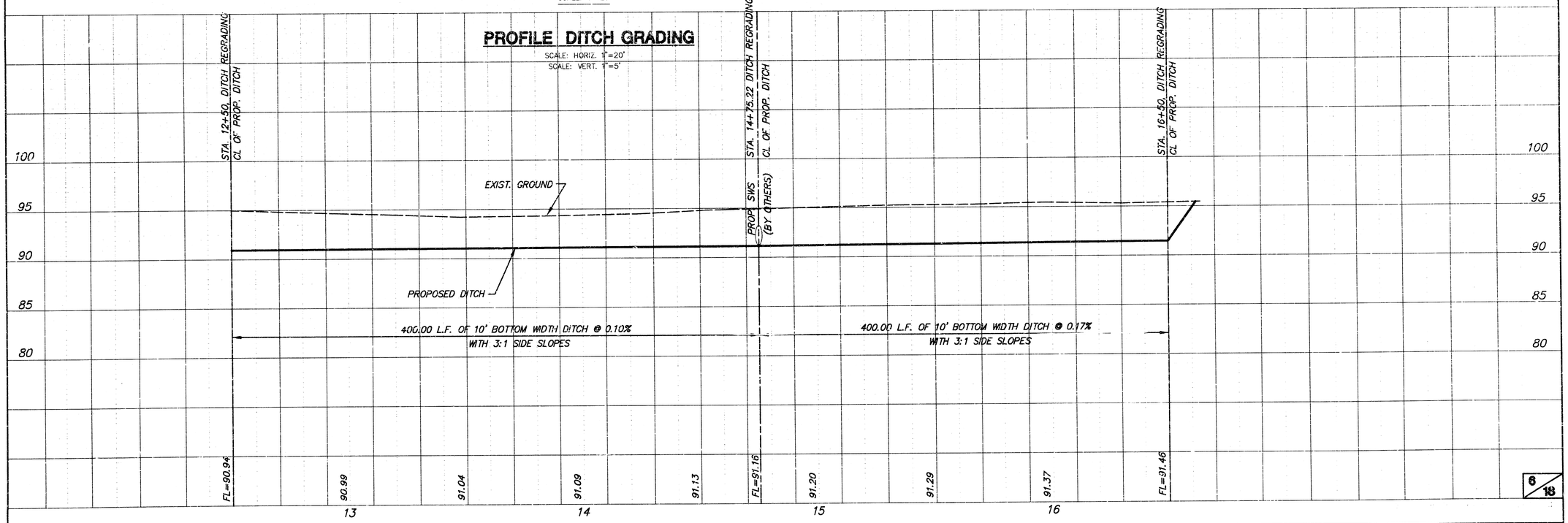

G:\CIVIL\361.18\0125A\BRIDGE\0125403.DWG Wed Feb 06 09:12:50 2002

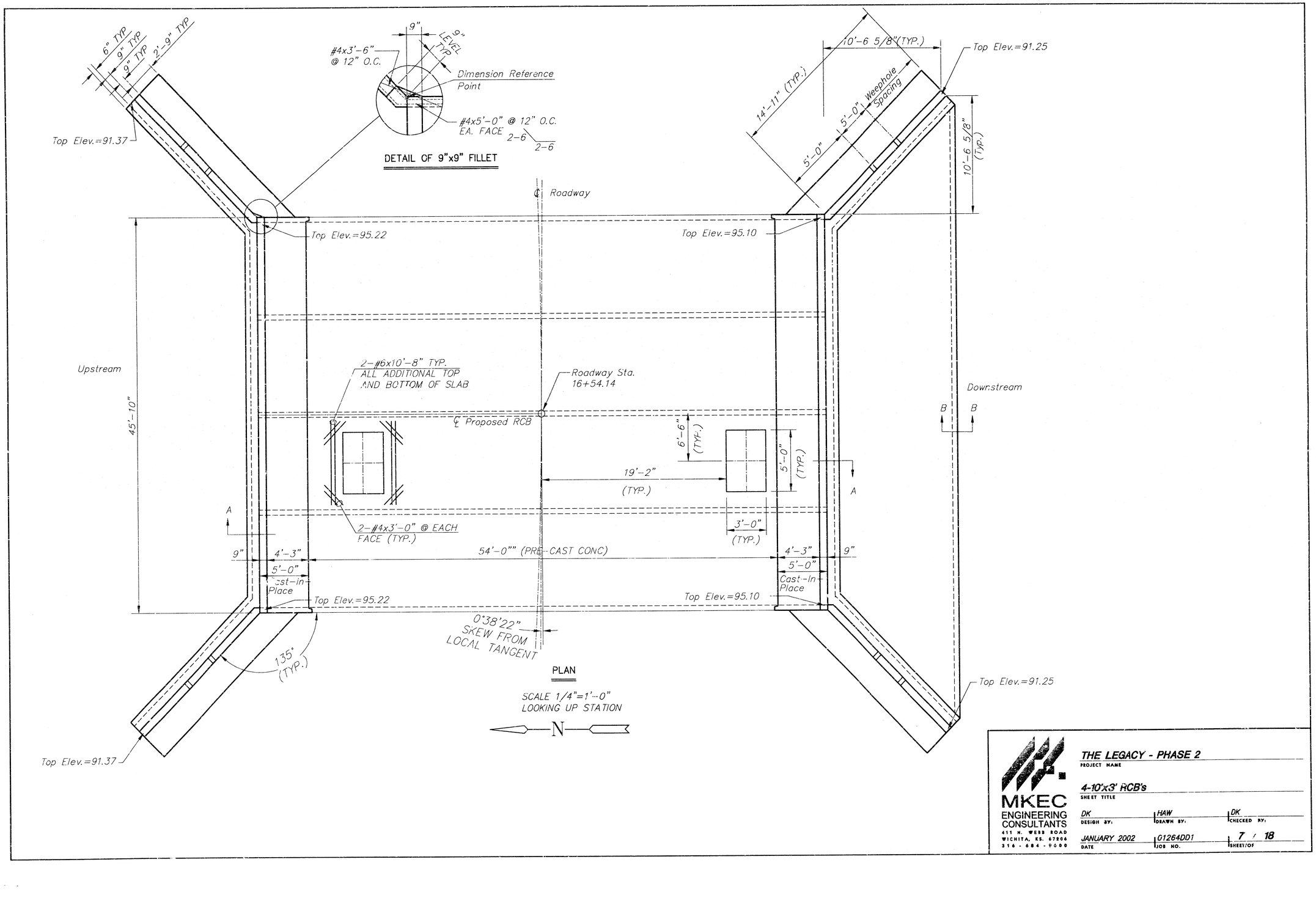

MKEC ENGINEERING CONSULTANTS
411 N. WEBB ROAD
WICHITA, KS. 67206
316-684-9600

THE LEGACY - PHASE 2
PROJECT NAME

4-10'x3' RCB's
SHEET TITLE

DK	HAW	DK
DESIGN BY:	DRAWN BY:	CHECKED BY:
JANUARY 2002	01264DD1	7 / 18
DATE	JOB NO.	SHEET/OF

G:\CIVIL\95138\01264\BRIDGE\01264DD1.DWG Wed Feb 06 09:14:12 2002

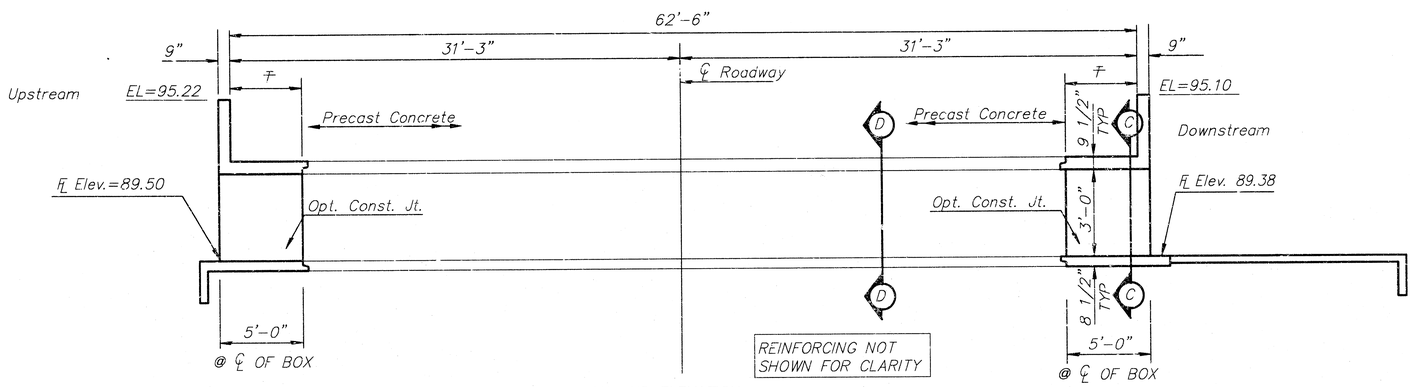

∓ Hand Compaction Equip. Only in this area

SECTION AND ELEVATION
(Normal to ℄ Roadway @ STA 16+54.14)
SCALE 1/4"=1'-0"

GENERAL NOTES

LOADING: HS20-44 AASHTO Specifications, 1996 Edition.

UNIT STRESSES: Concrete; X:f'c = 4,000 p.s.i.
Reinforcing Steel; fy = 60,000 p.s.i.

CONCRETE: City of Wichita Paving Mix with 6.6 sacks Type 1 Portland Cement per cubic Yard shall be used throughout. (f'c=4,000 PSI Bevel all exposed edges with a 3/4" trianguiar mouiding.

REINFORCING: All reinforcing shall conform to ASTM A615, Grade 60. All dimensions relative to reinforcing steel shall be to centerline of bar unless otherwise noted.

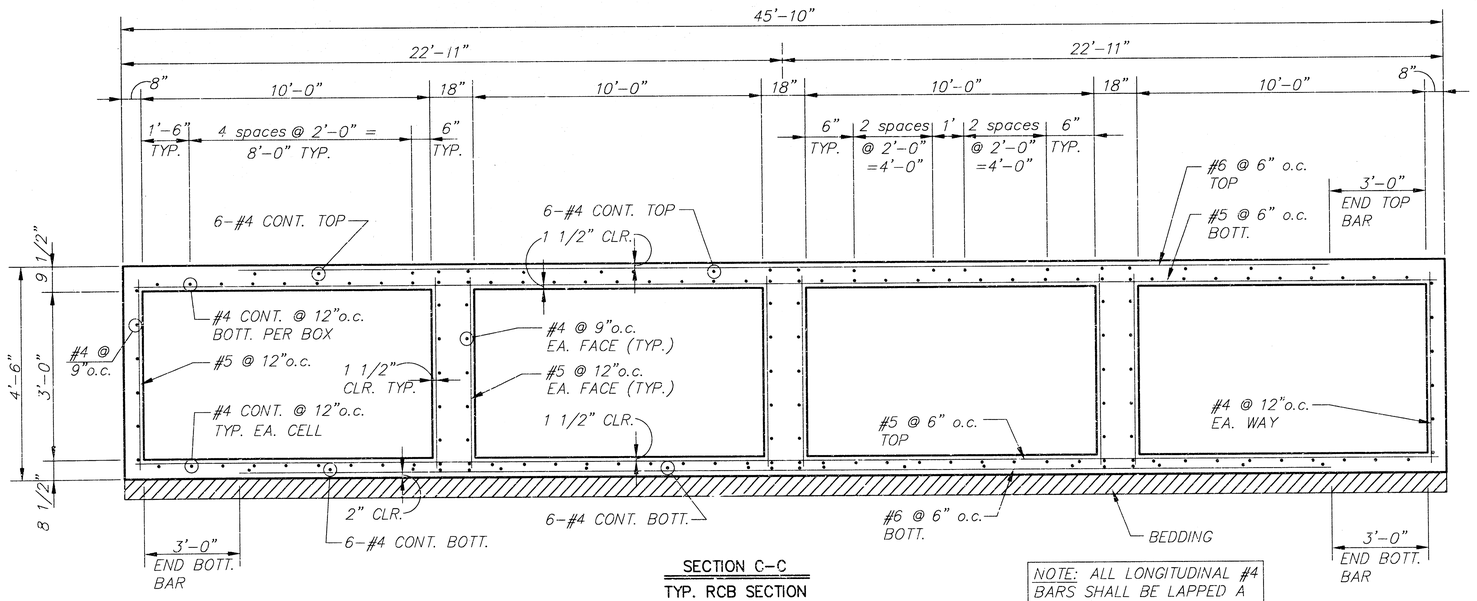

SECTION C-C
TYP. RCB SECTION
SCALE 1/2"=1'-0"

NOTE: ALL LONGITUDINAL #4 BARS SHALL BE LAPPED A MINIMUM OF 12"

MKEC ENGINEERING CONSULTANTS
411 N. WEBB ROAD
WICHITA, KS. 67206
316 - 684 - 9600

THE LEGACY - PHASE 2
PROJECT NAME

4-10'x3' RCB's DETAILS
SHEET TITLE

DK	HAW	DK
DESIGN BY:	DRAWN BY:	CHECKED BY:
JANUARY 2002	01264D02	8 / 18
DATE	JOB NO.	SHEET/OF

G:\CIVIL\1351301\01264BRIDGE\01264D02.DWG Wed Feb 06 09:14:55 2002

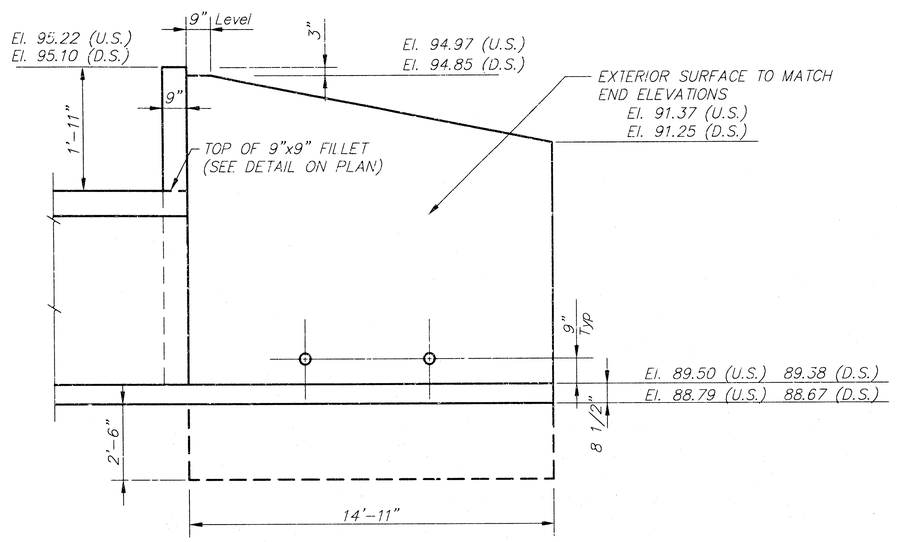

TYPICAL ELEVATION OF WINGWALLS

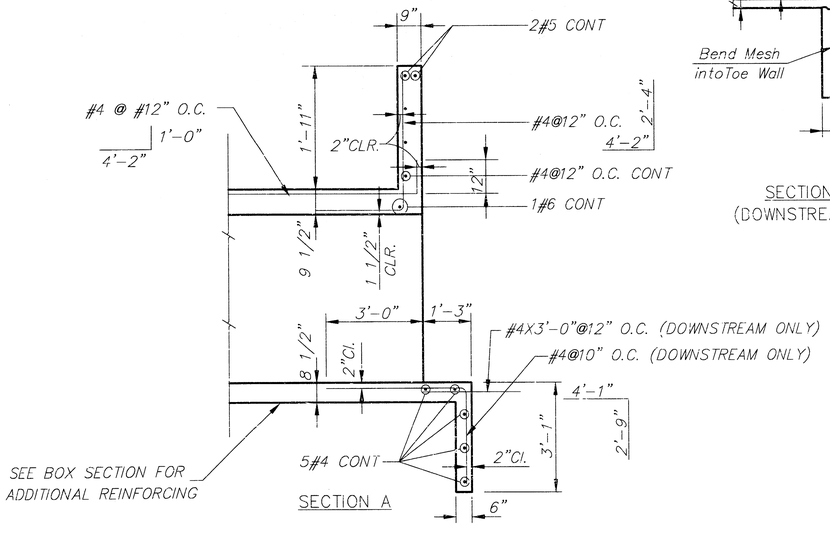

SECTION A

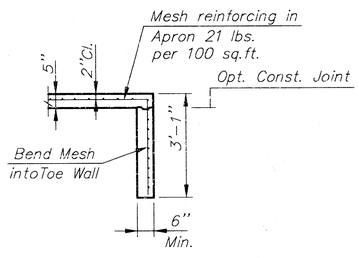

SECTION B–B
(DOWNSTREAM ONLY)

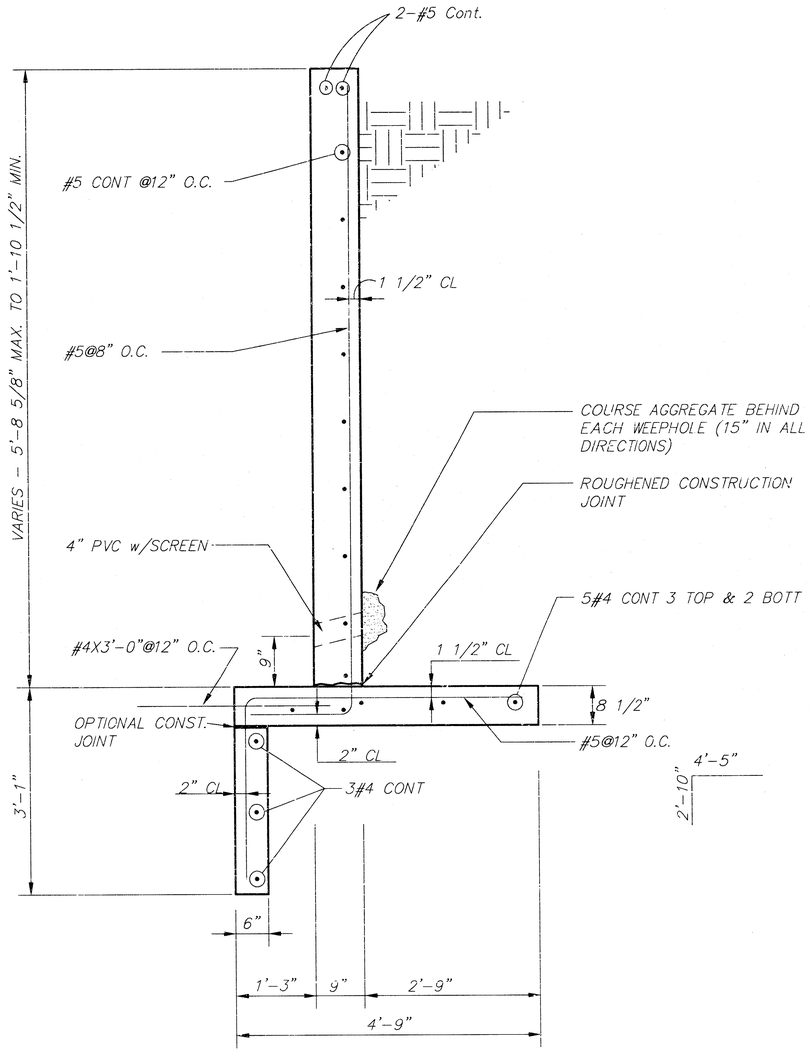

TYPICAL WINGWALL

H:\CIVIL\961861\SWS\SWD_130\961860D5.DWG

G:\CIVIL\961861\01264\BRIDGE\01264DD3.DWG Wed Feb 06 09:15:37 2002

MKEC ENGINEERING CONSULTANTS
411 N. WEBB ROAD
WICHITA, KS. 67206
316 - 684 - 9600

THE LEGACY - PHASE 2
PROJECT NAME

4-10'x3' RCB's DETAILS
SHEET TITLE

DK	HAW	DK
DESIGN BY:	DRAWN BY:	CHECKED BY:
JANUARY 2002	01264DD3	9 / 18
DATE	JOB NO.	SHEET/OF

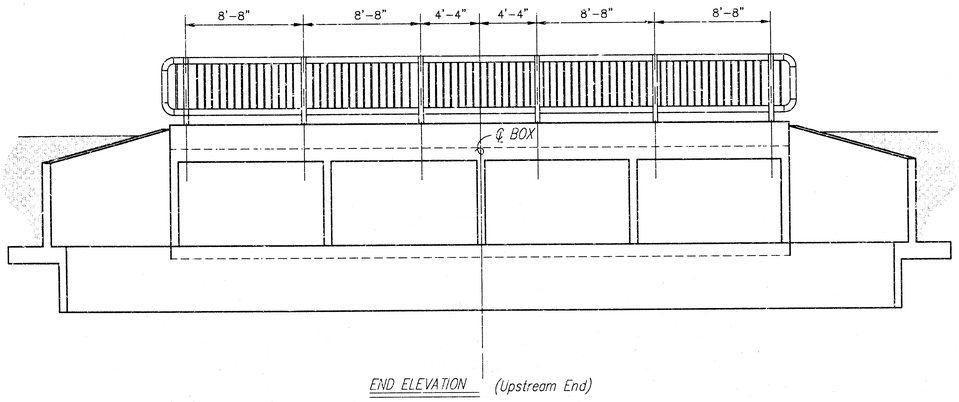

END ELEVATION (Upstream End)

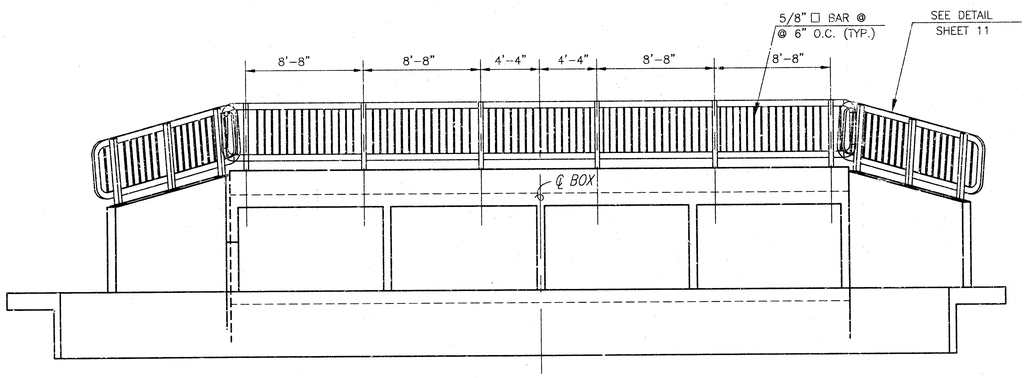

END ELEVATION (Downstream End)

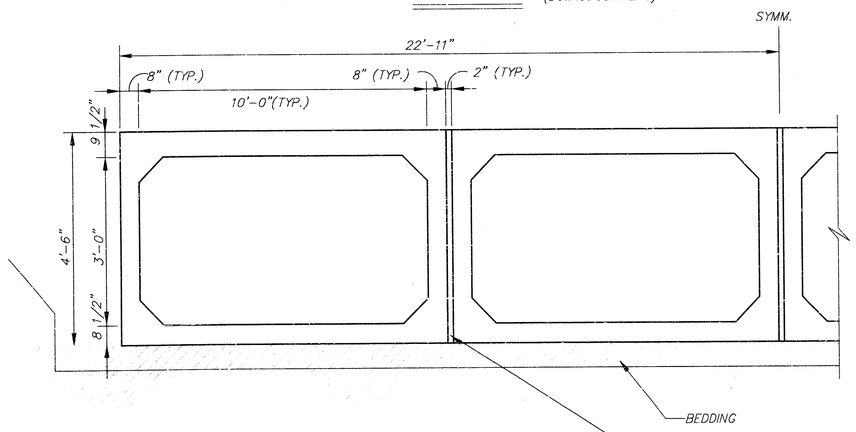

SECTION D--D
TYP. PRECAST RCB SECTION
SCALE 1/2"=1'-0"

FILL SPACE BETWEEN BOXES WITH GROUT. (TO MAINTAIN PROPER JOINT GAP, PARTIALLY BACKFILL BOXES PRIOR TO GROUTING OR PROVIDE A MECHANICAL CONNECTION BETWEEN BOXES.)

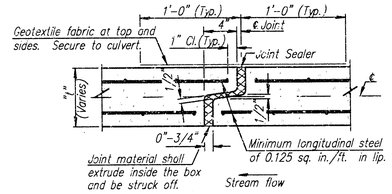

OPTION "A"

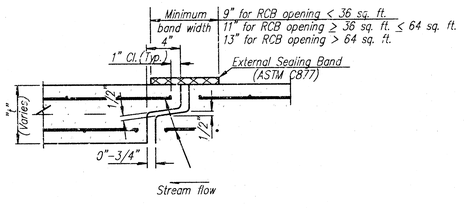

OPTION "B"

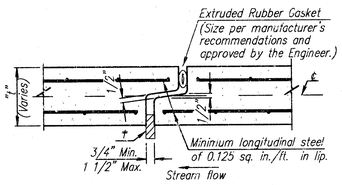

OPEN JOINT DETAIL

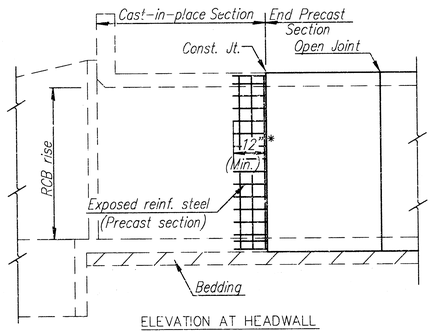

ELEVATION AT HEADWALL

(End unit using combination of cast-in-place and precast sections.)

✳ EXPOSED REINFORCING STEEL IN THE WALL AND THE TOP & BOTT. SLABS

GENERAL NOTES

PRECAST BOX CULVERTS: If precast box culverts are specified, they shall be constructed at the locations shown in the plans and according to the requirements shown on this sheet. When approved by the Engineer, precast box culverts may be constructed in lieu of cast-in-place box culverts. When the precast option is chosen by the Contractor, the cast-in-place quantities shall be used as the basis of payment which shall include all labor, equipment, materials, and incidentals necessary to complete the installation.

Unless otherwise approved by the Engineer, cast-in-place collars shall be required at horizontal and vertical changes in RCB alignment. Cast-in-place end sections and wingwalls are required except as noted on this sheet. Cast-in-place sections may be required at the direction of the Engineer at junctions of drainage structures.

Cast-in-place concrete work shall be done in accordance with the KDOT Specifications and KDOT's "Guidelines for Structural Design and Detail of Reinforced Concrete Box Culverts". Class AAA (AE) Concrete and Grade 60 Reinforcing Steel shall be used for the cast-in-place construction.

SPECIFICATIONS: Single-cell Precast Concrete Box Culverts shall conform to the requirements of the following specifications except as noted in the KDOT Specifications. Multiple-cell Precast Boxes shall be designed in accordance with the criteria used to develop the single-cell precast boxes. (See the latest AASHTO Specifications.)

Condition	Min. Fill	AASHTO	Equiv. ASTM
2 Ft. or more fill	2 Ft.	M259, Table 2	C789, Table 2
Less than 2 Ft. fill	0 Ft.	M273, Table 2	C850, Table 2

FABRICATION: Prior to fabrication, the Contractor shall furnish shop drawings to the Engineer for review. Shop drawings shall detail all phases of construction including layout, joint details, lifting devices, casting methods, construction placement and details of any cast-in-place segments or transitions that may be required. Copies of overheight and overload permits, when required, shall be submitted with the shop drawings.

The following information shall be legibly marked on an inside face of each box section by waterproof paint or other approved means:

a) Date of manufacture
b) Name or trademark and location of the manufacturer
c) Weight of box section in tons
d) Piece mark
e) The top of the box

CONSTRUCTION REQUIREMENTS: Foundation preparation shall be in accordance with KDOT Specifications except that a minimum 6 inch thickness of crushed stone for backfill or 3 inch seal course shall be provided. Choice of bedding shall be at the Contractor's option and approved by the Engineer.

Precast concrete box culvert shall be laid with the groove end of each section upstream, and the sections shall be tightly joined. Joint shall be sealed with an approved bituminous mastic material and geotextile or sealing band or an extruded rubber gasket, installed in accordance with the recommendations of the manufacturer. Lifting holes shall be plugged with a precast plug, sealed and covered with mastic or mortar.

MKEC ENGINEERING CONSULTANTS
411 N. WEBB ROAD
WICHITA, KS. 67206
316 - 684 - 9600

THE LEGACY - PHASE 2
PROJECT NAME

4-10'x3' RCB's DETAILS
SHEET TITLE

DESIGN BY:	DRAWN BY:	CHECKED BY:
DK	HAW	DK
DATE: JANUARY 2002	JOB NO.: 01264DD4	SHEET: 10 / 18

G:\CIVIL\1361301264\BRIDGE\01264DD4.DWG Wed Feb 06 09:16:46 2002

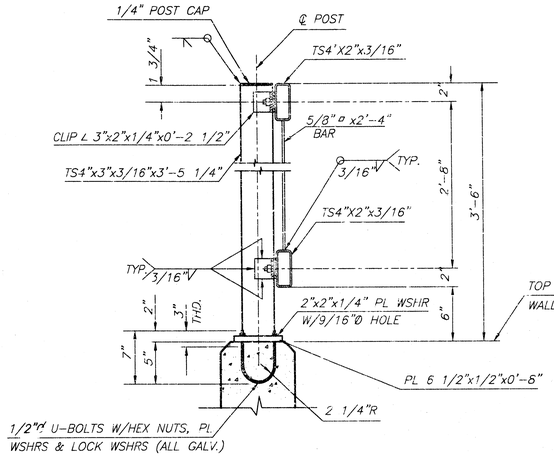

TYPICAL RAIL SECTION
NO SCALE

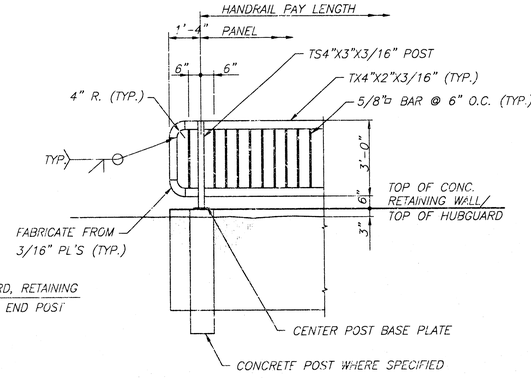

TYPICAL HANDRAIL PANEL DETAIL

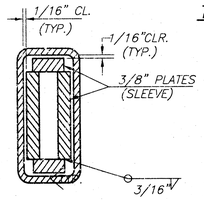

SECTION B-B
NO SCALE

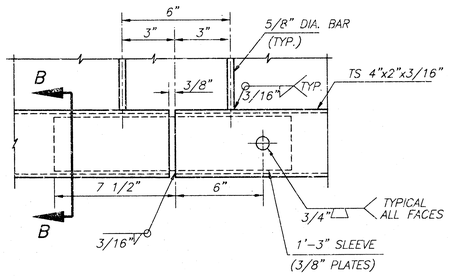

SLEEVE DETAIL
NO SCALE
(BOTTOM RAIL SHOWN, TOP RAIL SIMILAR)

HANDRAIL NOTES:

The rail members shall conform to ASTM Designation A36 or equivalent.

Rail shall be fabricated in lengths to include a minimum of two and a maximum of three panels. Posts shall be set vertical. Shims may be used between concrete and base plates of posts.

All parts of Handrail shall be painted. The primer coat shall conform to the inorganic Zinc System. Surface preparation shall be in accordance with that for structural steel. The finish coat shall be in accordance with water-borne acrylic finish coat. All materials, equipment and labor necessary for the installation of the Handrail shall be subsidiary to the bid item "RCB Culvert & Wingwalls."

Paint shall be Tnemec semi-gloss Hunter Green (pl 20) or an equivalent approved by MKEC. Supply color charts to MKEC for approval prior to painting of hand rail.

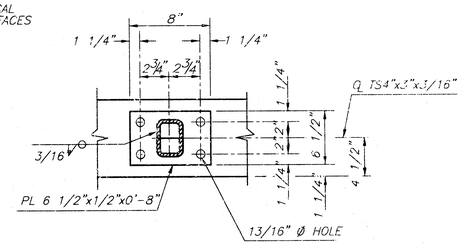

BASE PLATE DETAIL
NO SCALE

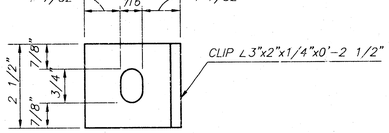

CLIP DETAIL
NO SCALE

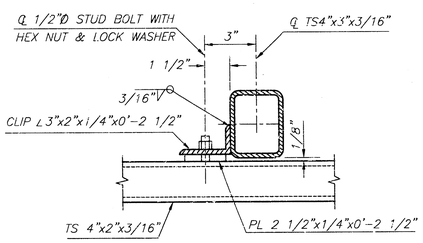

RAIL CONNECTION DETAIL
NO SCALE

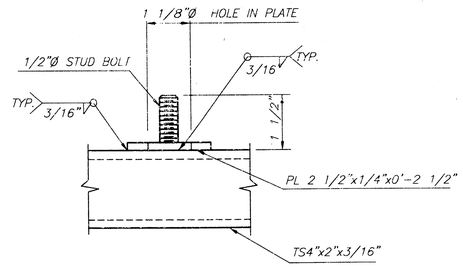

STUD BOLT DETAIL
NO SCALE

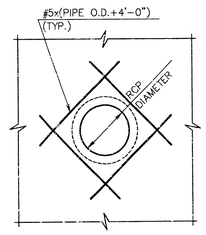

REINF. AT PIPE THRU REINF. CONC. BOX

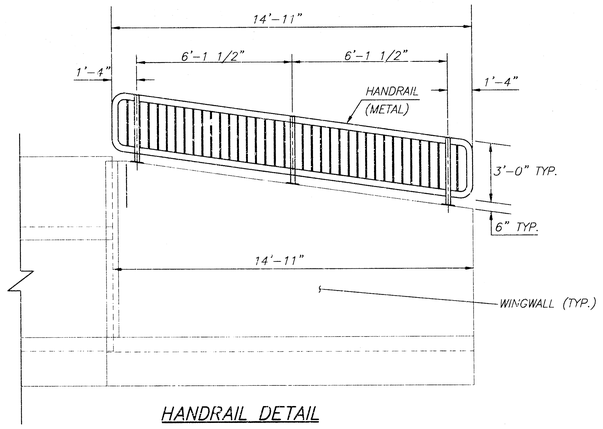

HANDRAIL DETAIL
(2 REQUIRED)
(NOT TO SCALE)

THE LEGACY - PHASE 2 PROJECT NAME		
4-10'x3' RCB's SHEET TITLE		
DK DESIGN BY:	HAW DRAWN BY:	DK CHECKED BY:
JANUARY 2002 DATE	01264DD5 JOB NO.	11 / 18 SHEET/OF

MKEC ENGINEERING CONSULTANTS
411 N. WEBB ROAD
WICHITA, KS. 67206
316 - 684 - 9600

G:\CIVIL\95\38\01264\DRIDGE\01264DD5.DWG Wed Feb 06 12:30:07 2002

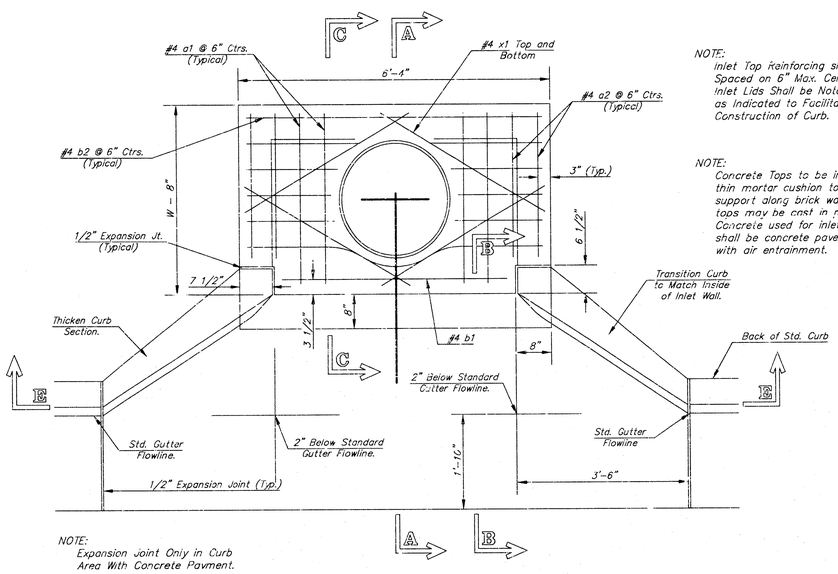

NOTE:
Expansion Joint Only in Curb Area With Concrete Pavment.

NOTE:
Inlet Top Reinforcing shall be Spaced on 6" Max. Centers. Inlet Lids Shall be Notched Out as Indicated to Facilitate Construction of Curb.

NOTE:
Concrete Tops to be installed on thin mortar cushion to insure full support along brick walls. Concrete tops may be cast in place or precast. Concrete used for inlet construction shall be concrete pavement mix with air entrainment.

PLAN

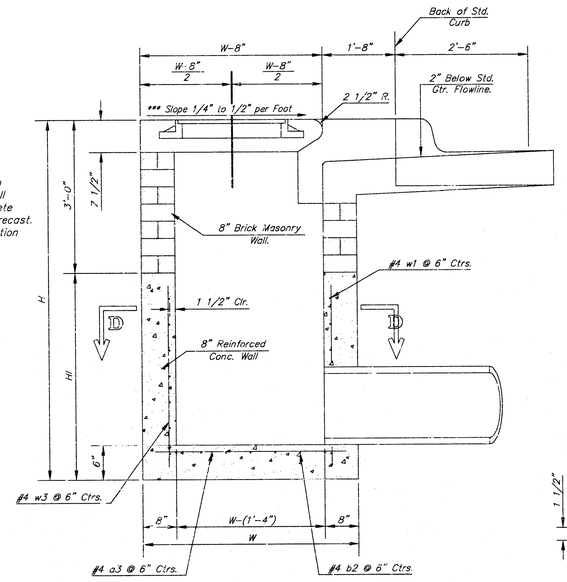

SECTION A-A

***NOTE: Slope of Inlet tops to Match Sidewalk or Parking Slopes within Limits Indicated.

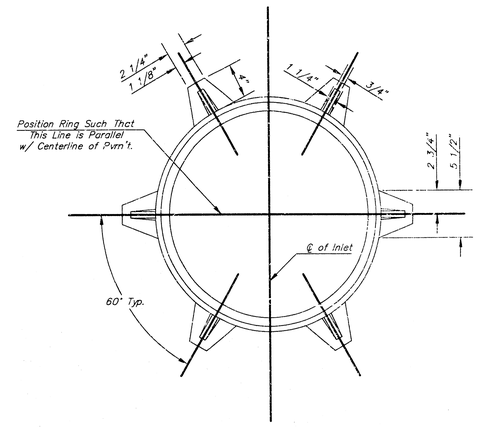

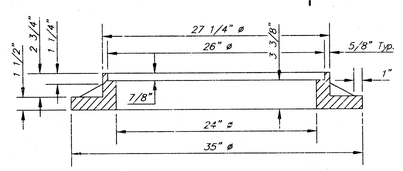

MANHOLE RING AND COVER

Weight = 180 Lbs.

*See City of Wichita Standard Manhole Ring and Cover Detail Sheet for Cover Details to Be Used With Inlet Frame.

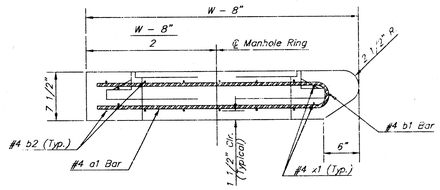

SECTION A-A

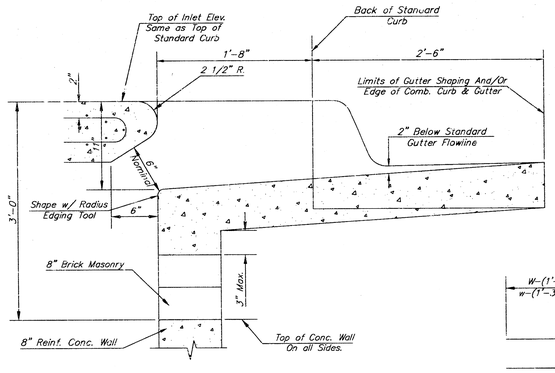

SECTION B-B

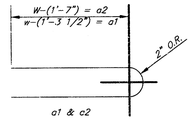

BENDING DIAGRAM

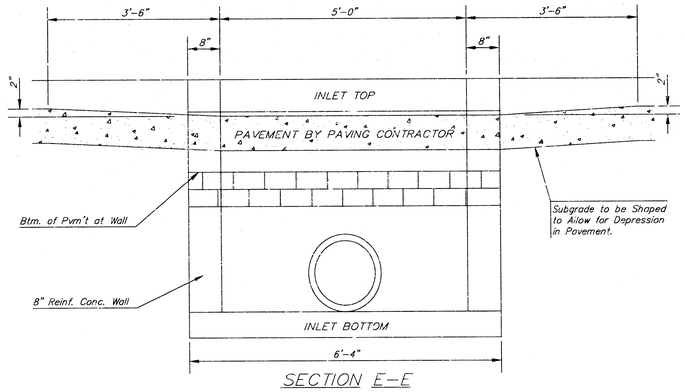

SECTION E-E

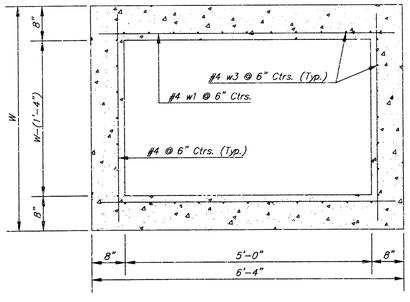

SECTION D-D

NOTE: Contractor shall have the option of constructing 8" brick masonry walls between the concrete inlet base and top on this inlet when W=6'-4" and H=7'-0" or less.

Additional curb and gutter construction necessary to connect set-back inlet to pavement will be paid for at the unit price bid for each inlet hookup.

Inlet invert shall be shaped with 8 sack sand mix concrete to create flow channels and to increase hydraulic efficiency such that the inlet will be self-cleaning between all inlet and/or outlet pipes.

The ends of all pipes installed in inlets shall be cut off flush with the inside face of the inlet wall

PRECAST SLAB AND FLOOR REINFORCING

		W = 4'-4"		W = 5'-4"		W = 6'-4"		W = 7'-4"		W = 8'-4"	
MARK	SIZE	NO.	LENGTH	NO.	LENGTH	NO.	LENGTH	NO.	LENGTH	NO.	LENGTH
* a1	#4	6	6'-7"	6	8'-7"	6	10'-7"	6	12'-7"	6	14'-7"
a2	#4	4	6'-0"	4	8'-0"	4	10'-0"	4	12'-0"	4	14'-0"
a3	#4	13	4'-1"	13	5'-1"	13	6'-1"	13	7'-1	13	8'-1"
b1	#4	1	4'-9"	1	4'-9"	1	4'-9"	1	4'-9"	1	4'-9"
* b2	#4	23	6'-1"	29	6'-1"	35	6'-1"	41	6'-1"	47	6'-1"
x1	#4	8	3'-10"	8	4'-2"	8	4'-6"	8	4'-10"	8	5'-2"

WALL REINFORCING

		W = 4'-4"		W = 5'-4"		W = 6'-4"		W = 7'-4"		W = 8'-4"	
MARK	SIZE	NO.	LENGTH	NO.	LENGTH	NO.	LENGTH	NO.	LENGTH	NO.	LENGTH
w1	#4	①	6'-1"	①	6'-1"	①	6'-1"	①	6'-1"	①	6'-1"
w2	#4	①	4'-1"	①	5'-1"	①	6'-1"	①	7'-1"	①	8'-1"
w3	#4	32	②	36	②	40	②	44	②	48	②

* Field Bend or Cut Reinforcing as Required for Clearance.

① 4 (Hl - 12") (Hl - 21") Rounded down to nearest 0.5'

② Hl - 3"

STANDARD CURB INLET PRECAST TOPS

W	PRE-CAST TOP SIZE	PIPE SIZE	CU. YD. CONC.
4'-4"	3'-8" x 6'-4" x 7 1/2"	21" & SMALLER	0.38±
5'-4"	4'-8" x 6'-4" x 7 1/2"	24" & 30"	0.51±
6'-4"	5'-8" x 6'-4" x 7 1/2"	36" & 42"	0.64±
7'-4"	6'-8" x 6'-4" x 7 1/2"	48" & 54"	0.77±
8'-4"	7'-8" x 6'-4" x 7 1/2"	60" & 66"	0.90±

THE CITY OF WICHITA

CITY ENGINEER'S OFFICE
CITY HALL - SEVENTH FLOOR
455 NORTH MAIN STREET
WICHITA, KANSAS 67202
(316) 268-4501
(316) 268-4174 FAX

STANDARD TYPE 1-A CURB INLET OPENING = 6" x 5'-0"

M. E. LINDEBAK P.E. - CITY ENGINEER

PROJECT NUMBER	INDEX CODE
472-83301	765662
DATE: OCT. 01	SHEET 12 OF 18

G:\CIVIL\05138\01264\BRIDGE\01264DB.DWG Wed Feb 06 09:18:10 2002

NW Cor. SE1/4
Sec.13, T28S,R1W

25.0' CITIES SERVICE PIPELINE ESMT. MISC. BOOK 623, PAGE 553

9.5'

40' BLDG. STBK. FROM CL PIPELINE ESMT.

℄ 66' CITIES SERVICE PIPELINE ESMT. MISC. BOOK 369, PAGE 864

43' ℗ TO ℄ 25' CITIES SERVICE PIPELINE ESMT. MISC. BOOK 623, PAGE 553

25.0' CITIES SERVICE PIPELINE ESMT. MISC. BOOK 623, PAGE 553

50' BUILDING SETBACK FROM ℄ 66' CITIES SERVICE PIPELINE ESMT. MISC. BOOK 369, FILM 864

10' UTILITY ESMT.

NE Cor.N1/2,SE1/4
Sec.13, T28S,R1W

N

SCALE: 1"=50'

0 50 100

RESERVE "B"

RESERVE "C"

RESERVE "D"

℄ 66' CITIES SERVICE PIPELINE ESMT. FILM 369, PAGE 864

CITIES SERVICE PIPELINE ESMT. FILM 369, PAGE 554

WILLIAMS PIPELINE

MILLIAMS PIPELINE

EXIST. DITCH

NOTES:

1. EROSION CONTROL IS TO MEET ALL FEDERAL, STATE, COUNTY & LOCAL CODE STANDARDS.
2. CONTRACTOR SHALL PROVIDE EROSION PROTECTION THROUGHOUT PROJECT CONSTRUCTION. THE PLAN PROVIDED HERE IS FOR FINAL PROTECTION, VARIOUS PHASES OF THIS PLAN SHALL BE IMPLEMENTED OR MODIFIED TO CONTROL EROSION. MODIFICATIONS OF THE PLAN SHALL BE APPROVED BY THE OWNERS REPRESENATIVE.
3. ALL DISTURBED AREAS SHALL BE SEEDED WITH RYE GRASS AT A RATE OF 200 LBS./ACRE WITHIN 10 DAYS OF CONSTRUCTION. APPROX. AREA TO BE SEEDED = 12.4 AC. (FOR INFORMATION ONLY)

LEGEND

SILT FENCE

HAY BALE SEDIMENT BARRIER

CURB INLET SEDIMENT BARRIER

MKEC ENGINEERING CONSULTANTS
411 N. WEBB ROAD
WICHITA, KS. 67206
316 - 684 - 9600

THE LEGACY - PHASE 2
PROJECT NAME

EROSION CONTROL
SHEET TITLE

DK	DK	DK
DESIGN BY:	DRAWN BY:	CHECKED BY:
JANUARY 2002	01264ER5	13 / 18
DATE	JOB NO.	SHEET/OF

G:\CIVIL\95\80\01264ABRIDGE\01264ERS.DWG Wed Feb 06 09:20:44 2002

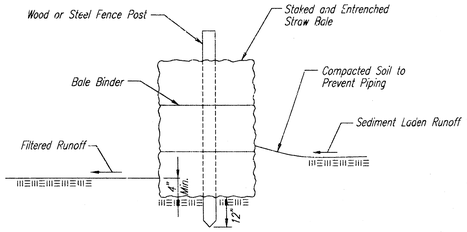

STRAW BALE BARRIERS

Material Specification:

Bale slope barriers may be constructed of wheat straw, oat straw, prairie hay, or bromegrass hay that is free of weeds declared noxious by the Kansas State Board of Agriculture.
The stakes used to anchor the bales should be a hardwood material with the following minimum dimensions: 2" square (nominal) by 4' long.

Placement:

A slope barrier should be used at the toe of a slope when a ditch does not exist. The slope barrier should be placed on nearly level ground 5' to 10' away from the toe of a slope. The barrier is placed away from the toe of the slope to provide adequate storage for settling out sediment.
When practicable, bale slope barriers should be placed along contours to avoid a concentration of flow.
Bale slope barriers can also be placed along right-of-way fence lines to keep sediment from crossing onto adjacent property. When placed in this manner, the slope barrier will not likely follow contours.

Proper installation method:

Excavate a trench the length of the planned slope barrier that is 4" deep and a bale's width wide. Make sure that the trench is excavated along a single contour. When practicable, slope barriers should be placed along contours to avoid a concentration of flow. Place the soil on the upslope side of the trench for later use.
Place the bales in the trench, making sure that they are butted tightly. Two stakes should be driven through each bale along the centerline of the ditch check, approximately 6" to 8" in from the bale ends. Stakes should be driven at least 12" into the ground.
Once all the bales have been installed and anchored, place the excavated soil against the upslope side of the check and compact it. The compacted soil should be no more than 3" to 4" deep.

List of common placement/installation mistakes to avoid:

When practicable, do not place bale slope barriers across contours. Slope barriers should be placed along contours to avoid a concentration of flow. Concentrated flow over a slope barrier creates a scour hole on the downslope side of the barrier. The scour hole eventually undermines the bales and the barrier fails.
Do not place bale slope barriers in areas with shallow soils underlain by rock. If the barrier is not anchored sufficiently, it will wash out.
Bale slope barriers must be dug into the ground. Bales at ground level do not work because they allow water to flow under the barrier.

Inspection and Maintenance:

Bale slope barriers should be inspected every 7 days and within 24 hours of a rainfall of 1/2" or more. The following is a list of questions that should be addressed during each inspection:

Are there any points along the slope barrier where water is concentrating?
Does water flow under the slope barrier?
Does water flow through spaces between abutting bales?
Are any bales dislodged?
Are bales decomposing due to age and/or water damage?
Does sediment need to be removed from behind the slope barrier?

NOTE: Point A must be higher than Point B so that water flows over the bales and not around them.

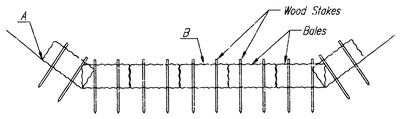

STRAW BALE DITCH CHECKS

Material Specification:

Bale ditch checks may be constructed of wheat straw, oat straw, prairie hay, or bromegrass hay that is free of weeds declared noxious by the Kansas State Board of Agriculture.
The stakes used to anchor the bales should be a hardwood material with the following minimum dimensions: 2" square (nominal) by 4' long.
Optional: The downstream scour apron should be constructed of a double-netted straw erosion-control blanket at least 6' wide.
Optional: The metal landscape staples used to anchor the erosion-control blanket should be at least 8" long.

Placement:

Bale ditch checks should be placed perpendicular to the flowline of the ditch.
The ditch check should extend far enough so that the ground level at the ends of the check is higher than the top of the lowest center bale. This prevents water from flowing around the check.
Checks should not be placed in ditches where high flows are expected. Rock checks should be used instead.
Bales should be placed in ditches with slopes of 6% or less. For slopes steeper than 6%, rock checks should be used.
The following table provides check spacing for a given ditch grade:

Ditch grade (%)	Check Spacing (feet)
0.5	200
1.0	200
2.0	100
3.0	65
4.0	50
5.0	40
6.0	30

Proper installation method:

Excavate a trench perpendicular to the ditch flowline that is 4" deep and a bale's width wide. Extend the trench in a straight line along the entire length of the proposed ditch check. Place the soil on the upstream side of the trench-it will be used later.
Optional: On the downstream side of the trench, roll out a length of erosion-control blanket (scour apron) equal to the length of the trench. Place the upstream edge of the erosion-control blanket along the bottom upstream edge of the trench. The erosion control blanket should be anchored in the trench with one row of 8" landscape staples placed on 18" centers. The remainder of the erosion-control blanket (the portion that is not lying in the trench) will serve as the downstream scour apron. This section of the blanket should be anchored to the ground with 8" landscape staples placed around the perimeter of the blanket on 18" centers. The remainder of the blanket should be anchored using two evenly spaced rows of 8" landscape staples on 18" centers placed perpendicular to the flowline of the ditch.
Place the bales in the trench, making sure that they are butted tightly. Two stakes should be driven through each bale along the centerline of the ditch check, approximately 6" to 8" in from the bale ends. Stakes should be driven at least 12" into the ground.
Once all the bales have been installed and anchored, place the excavated soil against the upstream side of the check and compact it. The compacted soil should be no more than 3" to 4" deep and extend upstream no more than 24".

List of common placement/installation mistakes to avoid:

Do not place a bale ditch check directly in front of a culvert outlet. It will not stand up to the concentrated flow.
Do not place bale ditch checks in ditches that will likely experience high flows. They will not stand up to concentrated flow.
Follow prescribed ditch-check spacing guidelines. If spacing guidelines are exceeded, erosion will occur between the ditch checks.
Do not allow water to flow around the ditch check. Make sure that the ditch check is long enough so that the ground level at the ends of the check is higher than the top of the lowest center bale.
Do not place bale ditch checks in channels with shallow soils underlain by rock. If the check is not anchored sufficiently, it will wash out.
Bale ditch checks must be dug into the ground. Bales at ground level do not work because they allow water to flow under the check.

Inspection and Maintenance:

Bale ditch checks should be inspected every 7 days and within 24 hours of a rainfall of 1/2" or more. The following is a list of questions that should be addressed during each inspection:

Does water flow around the ditch check?
Does water flow under the ditch check?
Does water flow through spaces between abutting bales?
Are any bales and/or scour aprons (optional) dislodged?
Are bales decomposing due to age and/or water damage?
Does sediment need to be removed from behind the ditch check?

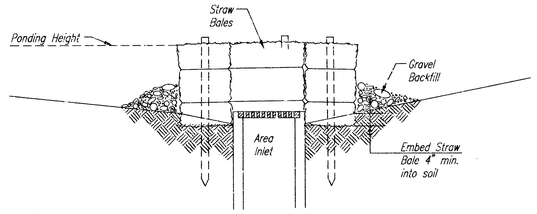

SECTION A-A

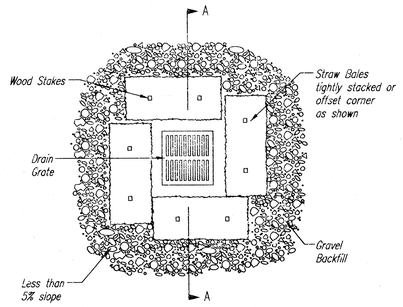

STRAW BALE BARRIERS FOR AREA INLETS
(INLET PROTECTION)

Material Specification:

Bale area inlet barriers should be constructed of wheat straw, oat straw, prairie hay, or bromegrass hay that is free of weeds declared noxious by the Kansas State Board of Agriculture.
The stakes used to anchor the bales should be a hardwood material with the following minimum dimensions: 2" square (nominal) by 4' long.

Placement:

Bale area inlet barriers should be placed directly around the perimeter of a drop inlet.
When a bale area inlet barrier is located near an inlet that has steep approach slopes, the storage capacity behind the barrier is drastically reduced. Timely removal of sediment must occur for a barrier to operate properly in this location.

Proper installation Method:

Excavate a trench around the perimeter of the area inlet that is at least 4" deep by a bale's width wide.
Place the bales in the trench, making sure that they are butted tightly. Some bales may need to be shortened to fit into the trench around the area inlet. Two stakes should be driven through each bale, approximately 6" to 8" in from the bale ends.
Stakes should be driven at least 12" into the ground.
Once all the bales have been installed and anchored, place the excavated soil against the receiving side of the barrier and compact it. The compacted soil should be no more than 3" to 4" deep.
Note: When a bale area inlet barrier is placed in a shallow median ditch, make sure that the top of the barrier is not higher than the paved road. In this configuration, water may spread onto the roadway causing a hazardous condition.

List of common placement installation mistakes to avoid:

Bales should be placed directly against the perimeter of the area inlet. This allows overtopping water to flow directly into the inlet instead of onto nearby soil causing scour.
Bale area inlet barriers must be dug into the ground. Bales at ground level do not work because they allow water to flow under the barrier.

Inspection and Maintenance:

Bale area inlet barriers should be inspected every 7 days and within 24 hours of a rainfall 1/2" or more. The following is a list of questions that should be addressed during each inspection:

Does water flow under the area inlet barrier?
Does water flow through spaces between abutting bales?
Are any bales dislodged?
Are bales decomposing due to age and/or water damage?
Does sediment need to be removed from behind the area inlet barrier?

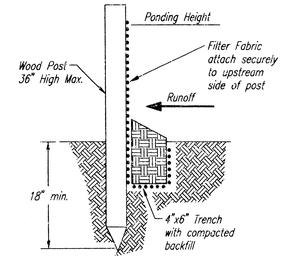

SILT FENCE BARRIERS

SILT FENCE BARRIERS

Material Specification:

Silt fence fabric should conform to the AASHTO M288 96 silt fence specification.
The posts used to support the silt fence fabric should be a hardwood material with the following minimum dimensions: 2" square (nominal) by 4' long.
Silt fence fabric should be attached to the wooden posts with staples, wire, zip ties, or nails.

Placement:

A slope barrier should be used at the toe of a slope when a ditch does not exist. The slope barrier should be placed on nearly level ground 5' to 10' away from the toe of a slope. The barrier is placed away from the toe of the slope to provide adequate storage for settling out sediment.
When practicable, silt fence slope barriers should be placed along contours to avoid a concentration of flow.
Silt fence slope barriers can also be placed along right-of-way fence lines to keep sediment from crossing onto adjacent property. When placed in this manner, the slope barrier will not likely follow contours.

Proper installation method:

Excavate a trench the length of the planned slope barrier that is 6" deep by 4" wide.
Make sure that the trench is excavated along a single contour. When practicable, slope barriers should be placed along contours to avoid a concentration of flow. Place the soil on the upslope side of the trench for later use.
Roll out a continuous length of silt fence fabric on the downslope side of the trench.
Place the edge of the fabric in the trench starting at the top upslope edge. Line all three sides of the trench with the fabric. Backfill over the fabric in the trench with the excavated soil and compact. After filling the trench, approximately 24" to 36" of silt-fence fabric should remain exposed.
Lay the exposed silt fence upslope of the trench to clear an area for driving in the posts.
Just downslope of the trench, drive posts into the ground to a depth of at least 18".
Place posts no more than 4' apart.
Attach the silt fence to the anchored post with staples, wire, zip ties, or nails.

List of common placement/installation mistakes to avoid:

When practicable, do not place silt fence slope barriers across contours. Slope barriers should be placed along contours to avoid a concentration of flow. When the flow concentrates, it overtops the barrier and the silt fence slope barrier quickly deteriorates.
Do not place silt-fence posts on the upslope side of the silt fence fabric. In this configuration, the force of the water is not restricted by the posts, but only by the staples (wire, zip ties, nails, etc.). The silt fence will rip and fail.
Do not place silt fence slope barriers in areas with shallow soils underlain by rock. If the barrier is not sufficiently anchored, it will wash out.
Silt fence slope barriers must be dug into the ground-silt fence at ground level does not work because water will flow underneath.

Inspection and Maintenance:

Silt fence slope barriers should be inspected every 7 days and within 24 hours of a rainfall of 1/2" or more. The following is a list of questions that should be addressed during each inspection:

Are there any points along the slope barrier where water is concentrating?
Does water flow under the slope barrier?
Do the silt fences sag excessively?
Has the silt fence torn or become detached from the posts?
Does sediment need to be removed from behind the slope barrier?

CITY OF WICHITA

SOIL EROSION BMP DETAILS

CHRISTOPHER M. CARRIER, P.E.
STORM WATER ENGINEER

PROJECT NUMBER	OCA NO.
____-_____	_____
DATE: MAY 2001	SHEET 14 OF 18

G:\CITY\L\351380\0264\BRIDGE\01264FI.DWG Wed Feb 06 09:31:24 2002
XSNR: DEP OPER: DEP SCALE: 1=1.00
Z:\STANDARD\Standards Work\0 STORM_PRC_DTL\ST 06-05-2001 01:59:12 pm

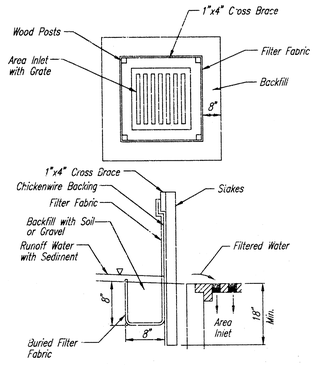

SILT FENCE BARRIERS FOR AREA INLETS
(INLET PROTECTION)

Material Specification:

Silt fence fabric should conform to the AASHTO M288 96 silt fence specification.
The wire or polymeric mesh backing used to help support the silt fence fabric should conform to the AASHTO M288 96 silt fence specification.
The posts used to support the silt fence fabric should be a hardwood material with the following minimum dimensions: 2" square (nominal) by 4' long.
The material used to frame the tops of the posts should be 1" by 4" boards.
Silt fence fabric and support backing should be attached to the wooden posts and frame with staples, wire, zip ties, or nails.

Placement:

Place a silt fence drop inlet barrier in a location where it is unlikely to be overtopped.
Water should flow through silt fence, not over it. Silt fence barriers for area inlets often fail when repeatedly overtopped.
When used as a barrierfor area inlets, silt fence fabric and posts must be supported at the top by a wooden frame.
When a silt fence barrier for area inlets is located near an inlet that has steep approach slopes, the storage capacity behind the barrier is drastically reduced. Timely removal of sediment must occur for a barrier to operate properly in this location.

Proper installation method:

Excavate a trench around the perimeter of the area inlet that is at least 8" deep by 8" wide.
Drive posts to a depth of at least 18" around the perimeter of the area inlet.
The distance between posts should be 4' or less. If the distance between two adjacent corner posts is more than 4', add another post(s) between them.
Connect the tops of all the posts with a wooden frame made of 1" by 4" boards. Use nails or screws for fastening.
Attach the wire or polymeric-mesh backing to the outside of the post/frame structure with staples, wire, zip ties, or nails.
Roll out a continuous length of silt fence fabric long enough to wrap around the perimeter of the area inlet. Add more length for overlapping the fabric joint. Place the edge of the fabric in the trench, starting at the outside edge of the trench. Line all three sides of the trench with the fabric. Backfill over the fabric in the trench with the excavated soil and compact. After filling the trench, approximately 24" to 36" of silt fence fabric should remain exposed.
Attach the silt fence to the outside of the post/frame structure with staples, wire, zip ties, or nails. The joint should be overlapped to the next post.

Note: When a silt fence barrier for area inlet is placed in a shallow median ditch, make sure that the top of the barrier is not higher than the paved road. In this configuration, water may spread onto the roadway causing a hazardous condition.

List of common placement/installation mistakes to avoid:

Water should flow through a silt fence barrier for area inlet-not over it. Place a silt fence barrier for area inlet in a location where it is unlikely to be overtopped. Silt fence barrier for area inlets often fail when repeatedly overtopped.
Do not place posts on the outside of the silt fence barrier for area inlet. In this configuration, the force of the water is not resisted by the posts, but only by the staples (wire, zip-ties, nails, etc.). The silt fence will rip and fail.
Do not install silt fence barrier for area inlets without framing the top of the posts.
The corner posts around area inlets are stressed in two directions whereas a normal silt fence is only stressed in one direction. This added stress requires more support.

Inspection and Maintenance:

Silt fence barrier for area inlets should be inspected every 7 days and within 24 hours of a rainfall of 1/2" or more. The following is a list of questions that should be addressed during each inspection:

Does water flow under the silt fence?
Does the silt fence sag excessively?
Has the silt fence torn or become detached from the posts?
Does sediment need to be removed from behind the area inlet barrier?

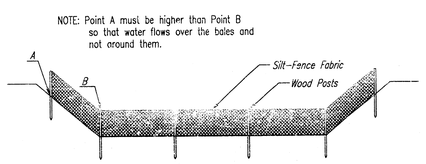

ELEVATION

SILT FENCE DITCH CHECKS
(STREAM PROTECTION)

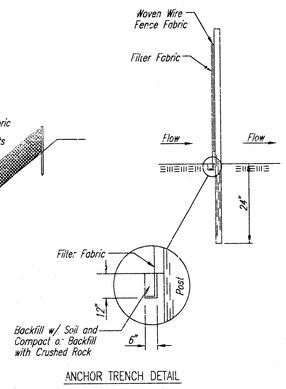

ANCHOR TRENCH DETAIL

Material Specification:

Silt fence fabric should conform to the AASHTO M288 96 silt fence specification.
The posts used to support the silt fence fabric should be a hardwood material with the following minimum dimensions: 2" square (nominal) by 4' long.
Silt fence fabric should be attached to the wooden posts with staples, wire, zip ties, or nails.

Placement:

Place silt fence in ditches where it is unlikely that it will be overtoppea.
Water should flow through a silt fence ditch check, not over it. Silt fence ditch checks often fail when overtopped.
Silt fence ditch checks should be placed perpendicular to the flowline of the ditch.
The silt fence should extend far enough so that the ground level at the ends of the fence is higher than the top of the low point of the fence. This prevents water from flowing around the check.
Checks should not be placed in ditches where high flows are expected. Rock checks should be used instead.
Silt fence should be placed in ditches with slopes of 6% or less. For slopes steeper than 6%, rock checks should be used.

The following table provides check spacing for a given ditch grade:

Ditch grade (%)	Check Spacing (feet)
0.5	200
1.0	200
2.0	100
3.0	65
4.0	50
5.0	40
6.0	30

Proper installation method:

Excavate a trench perpendicular to the ditch flowline that is at least 12" deep by 6" wide.
Extend the trench in a straight line along the entire length of the proposed ditch check.
Place the soil on the upstream side of the trench for later use.
Roll out a continuous length of silt fence fabric on the downstream side of the trench.
Place the edge of the fabric in the trench starting at the top upstream edge of the trench.
Line two sides of the trench with the fabric as shown on detail. Backfill over the fabric in the trench with the excavated soil and compact. After filling the trench, approximately 24" to 36" of silt fence fabric should remain exposed.
Lay the exposed silt fence on the upstream side of the trench to clear an area for driving in the posts. Just downstream of the trench, drive posts into the ground to a depth of at least 24". Place posts no more than 4' apart.
Attach the silt fence to the anchored post with staples, wire, zip ties, or nails.

List of common placement/installation mistakes to avoid:

Water should flow through a silt fence ditch check-not over it. Place silt fence in ditches where it is unlikely that it will be overtopped. Silt fence installations quickly deteriorate when water overtops them.
Do not place silt fence posts on the upstream side of the silt fence fabric. In this configuration, the force of the water is not restricted by the posts, but only by the staples (wire, zip ties, nails, etc.). The silt fence will rip and fail.
Do not place a silt fence ditch check directly in front of a culvert outlet. It will not stand up to the concentrated flow.
Do not place silt fence ditch checks in ditches that will likely experience high flows. They will not stand up to concentrated flow.
Follow prescribed ditch check spacing guidelines. If spacing guidelines are exceeded, erosion will occur between the ditch checks.
Do not allow water to flow around the ditch check. Make sure that the ditch check is long enough so that the ground level at the ends of the fence is higher than the low point on the top of the fence.
Do not place silt fence ditch checks in channels with shallow soils underlain by rock. If the check is not anchored sufficiently, it will wash out.

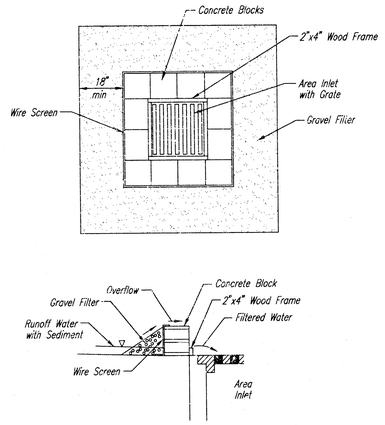

CONCRETE BLOCK FILTER FOR AREA DRAIN
(INLET PROTECTION)

Gravel barriers provide little filtering of large inflow waters. However, when installed correctly and maintained, they can effectively treat low runoff flows.

Placement of gravel filters around area drains must be completed in a manner that will not cause local flooding.

Gravel filters can be used if the immediate and adjacent area to the area drain consists of soil or pavement.

Only gravel filters are to be installed on top of the pavement.

Instructions for Installing:

STEP 1: Place concrete blocks around the grate. The blocks can be stacked one or two high and should be supported by a 2"x4" board.
STEP 2: Wrap 1/2" mesh wire screen around the concrete blocks.
STEP 3: Place 1" to 1-1/2" diameter rock around the blocks and wire screen. Be sure the rock extends down from the top of the concrete block.
STEP 4: To prevent damage to vehicles, signs warning drivers about the structures may be necessary.

An alternative method is use of gravel bags that are supported to prevent collapsing.

Use of rock having diameters smaller than 1" may result in clogging of pores and reduce the amount of water flowing into an inlet.

Maintenance:

All gravel filters installed around area drains should be inspected and repaired after each runoff event. Sediment should be removed when material is within 3" of the top of any block. Periodically, the gravel should be raked to increase infiltration and filtering of runoff waters. Accumulated sediment is to be removed immediately from roads and streets after every runoff event.

Inspection and Maintenance:

Silt fence ditch checks should be inspected every 7 days and within 24 hours of a rainfall of 1/2" or more. The following is a list of questions that should be addressed during each inspection:

Does water flow around the ditch check?
Does water flow under the ditch check?
Does the silt fence sag excessively?
Has the silt fence torn or become detached from the posts?
Does sediment need to be removed from behind the ditch check?

CITY OF WICHITA

SOIL EROSION BMP DETAILS

CHRISTOPHER M. CARRIER, P.E.
STORM WATER ENGINEER

PROJECT NUMBER ____-____-____
OCA NO. _____
DATE MAY 2001
SHEET 15 OF 18

G:\CIVIL\361WV0126A\BRIDGE\0126ERO2.DWG Wed Feb 06 09:36:26 2002
)SNR: DEP OPER: DEP SCALE: 1=1.00
2:\STANDARD\Standards Wichita\SEDMP_PEC_DTLS2 06-05-2001 01:58:26 pm

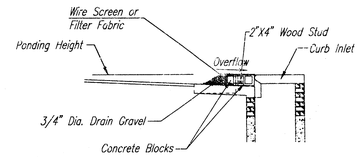

SECTION A-A

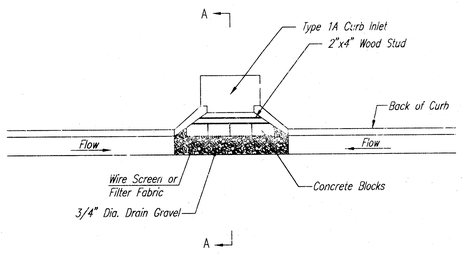

CURB INLET GRAVEL FILTERS
(INLET PROTECTION-RESIDENTIAL STREETS ONLY)

NOTE: Other types of curb inlet protection may be approved by the city so long as equal protection is provided.

A gravel inlet filter shall be installed at sump locations on residential streets. This type of protection is not to be used on arterial or collector streets at any time that it would pose an undue traffic hazard.

Instructions for Installing:

STEP 1: Place concrete blocks around the inlet as shown on drawing. Insert 2x4 board as shown.
STEP 2: Wrap 1/2" mesh wire screen around the concrete blocks.
STEP 3: Place 1" to 1-1/2" diameter rock around the blocks and wire screen. Be sure the rock extends down from the top of the concrete block.
STEP 4: To prevent damage to vehicles, signs warning drivers about the structures may be necessary. An alternative installation is the use of gravel bags supported by a 2"x4" board to prevent collapsing.

Use of rock with diameters smaller than 1" in the bag may result in clogging of pores and reduce the amount of water flowing into an inlet.

Maintenance:

All curb inlet gravel filters shall be inspected and repaired after each runoff event. Sediment deposits are to be removed once material is within 8 cm (3 inches) of the top of any block. Periodically, the gravel shall be raked to increase infiltration and filtering of runoff waters. Accumulated sediment is to be removed immediately from roads and streets.

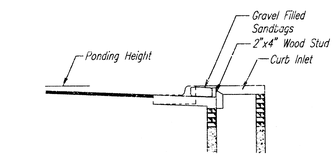

SECTION B-B

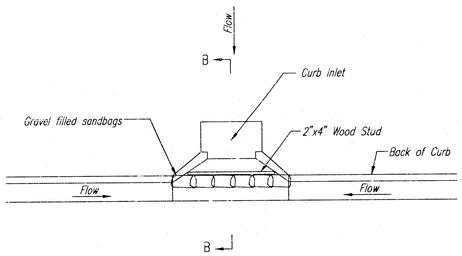

CURB INLET SANDBAG FILTERS
(INLET PROTECTION)

NOTE: Other types of curb inlet protection may be approved by the City so long as equal protection is provided.

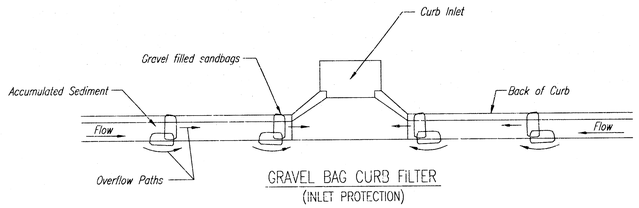

GRAVEL BAG CURB FILTER
(INLET PROTECTION)

NOTE: Place two or more sets of bags in a manner that results in maximum support. The flow line bag must be lower than top of curb.

CURB SEDIMENT TRAPS

When inlets are located on streets having a grade (i.e., sump conditions do not exist), installing gravel (or sand) bags in the gutter flow line to create small sediment traps can be considered. Gravel bags are recommended over sand bags to allow for drainage.

If the spacing between bags becomes too large, little sediment may be trapped. Spacing of bags should be completed using the table or graph that illustrates placement distances based upon street slope. When installed in the gutter, bag tops must be lower than the sidewalk.

Spacing:

Gravel bags are to be placed according to street grades using the following table or graph that appears below.

GRADE (%)	SPACING (FEET)
0.5	75
1.0	45
2.0	18
3.0	12
4.0	9
5.0	6

Maintenance:

Collected sediment shall be removed after every runoff event. Bags that are destroyed by vehicular traffic or through natural deterioration are to be immediately replaced.

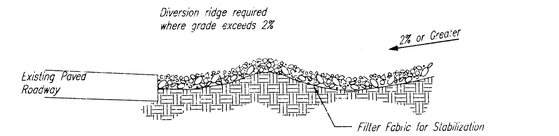

SECTION C-C

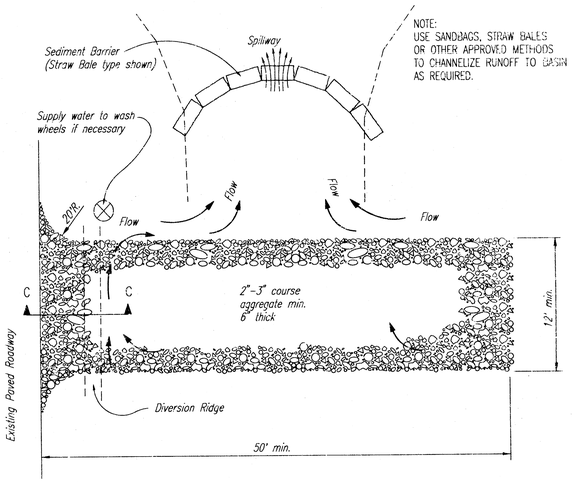

NOTE:
USE SANDBAGS, STRAW BALES OR OTHER APPROVED METHODS TO CHANNELIZE RUNOFF TO BASIN AS REQUIRED.

STABILIZED CONSTRUCTION ENTRANCE

NOTES:

1. THE ENTRANCE SHALL BE MAINTAINED IN A CONDITION THAT WILL PREVENT TRACKING OR FLOWING OF SEDIMENT ONTO PUBLIC RIGHTS-OF-WAY. THIS MAY REQUIRE TOP DRESSING, REPAIR AND/OR CLEANOUT OF ANY MEASURES USED TO TRAP SEDIMENT.
2. WHEN NECESSARY, WHEELS SHALL BE CLEANED PRIOR TO ENTRANCE ONTO PUBLIC RIGHT-OF-WAY.
3. WHEN WASHING IS REQUIRED, IT SHALL BE DONE ON AN AREA STABLIZED WITH CRUSHED STONE THAT DRAINS INTO AN APPROVED SEDIMENT TRAP OR SEDIMENT BASIN, AS SHOWN ABOVE.
4. DRIVE ENTRANCES ONTO RESIDENTIAL LOTS WILL NOT BE REQUIRED TO HAVE THE SEDIMENT BARRIER SHOWN, BUT WHEEL WASHING MAY BE REQUIRED IF STABILIZED ENTRANCE IS NOT SUFFICIENT TO KEEP MUD FROM BEING TRACKED ONTO ADJACENT STREET. ENTRANCE SHALL EXTEND FROM BACK OF CURB TO DWELLING.

CITY OF WICHITA

SOIL EROSION BMP DETAILS

CHRISTOPHER M. CARRIER, P.E.
STORM WATER ENGINEER

PROJECT NUMBER	OCA NO.
468-83199	------
DATE: MAY 2001	SHEET 16 OF 18

JSNR: DEP OPER: DEP SCALE: 1=1.00
2:\STANDARD\Standards Wichita\SEBMP_PEC_DTLS3 06-05-2001 02:03:06 pm
G:\CIVIL\R5130\V1264\BRIDGE\V1264ER3.DWG Wed Feb 06 09:34:14 2002

PHASE 1 – INITIAL EARTHWORK AND UTILITIES (EXCEPT STORM SEWER)

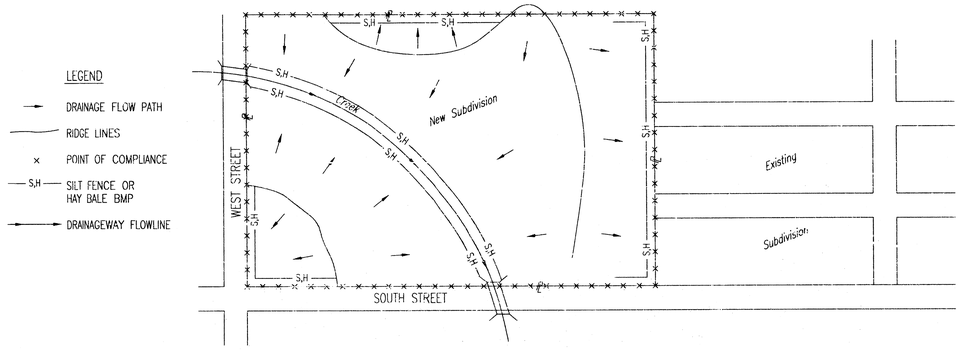

1. DURING THIS PHASE OF SUBDIVISION CONSTRUCTION, THE POINTS OF COMPLIANCE ARE THE PERIMETER BOUNDARIES AND ANY DRAINAGE WAYS OR STORM SEWERS DRAINING THRUGH OR FROM THE SITE. SHOULD LAKES BE CONSTRUCTED WITHIN THE SUBDIVISION THAT WILL DISCHARGE DURING STORMS, THEY ARE ALSO A POINT OF COMPLIANCE.
2. HAYBALES OR SILT FENCE MUST BE CONSTRUCTED ALONG THE PROPERTY LINE WHERE ON SITE WATER CAN DRAIN OFF THE PROPERTY. THESE BMP'S WILL ALSO BE INSTALLED ALONG ANY DRAINAGE DITCH OR LAKE THAT CAN DISCHARGE.
3. SHOULD SILT OR SEDIMENT ENTER THE DITCHES OR GUTTERLINES ON THE ADJACENT BOUNDRY STREETS, APPROPRIATE BMP'S WILL BE PLACED WITHIN THE SUBDIVISION TO PREVENT THIS.
4. ANY MUD TRACKED ONTO ADJACENT STREETS WILL BE REMOVED AT THE END OF EACH WORK DAY.
5. CONTRACTORS WORKING WITHIN THE SITE WILL NOT BE REQUIRED TO USE INDIVIDUAL BMP'S AS LONG AS THOSE SPECIFIED ABOVE ARE IN PLACE AND EFFECTIVE. CONTRACTORS WORKING ON THE BOUNDRY LINE STREETS OR ON ADJACENT PROPERTIES TO EXTEND UTILITIES ARE EXPECTED TO USE BMP'S AT THEIR WORK LOCATIONS, AS NEEDED
6. UTILIZE STABILIZED CONSTRUCTION ENTRANCE AT ENTRANCE AND EXIT ONTO ANY EXISTING PUBLIC STREETS.
7. THE SUBDIVISION DEVELOPER (OWNER) SHALL INSTALL AND MAINTAIN THE ON-SITE BMP'S.

PHASE 2 – INSTALLATION OF STORM SEWER

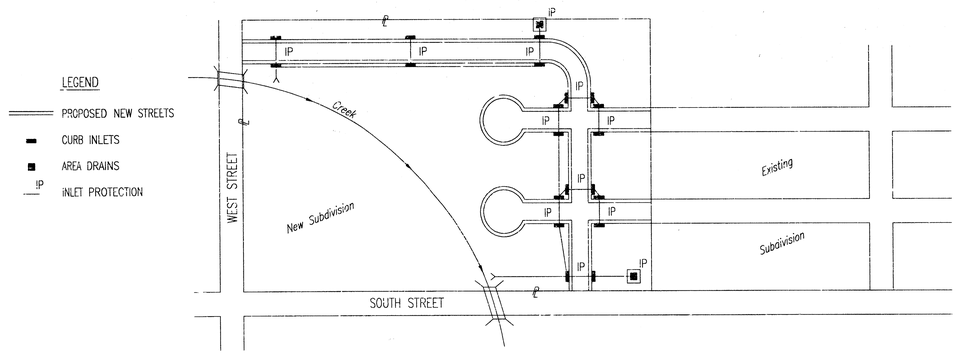

1. DURING THIS PHASE OF SUBDIVISION DEVELOPMENT, ALL BMP'S REQUIRED IN PHASE 1 SHALL REMAIN IN PLACE AND BE MAINTAINED.
2. AS NEW STORM SEWERS, WITH INLETS, ARE INSTALLED, THE STORM SEWERS MUST NOW BE PROTECTED SO ALL NEW INLETS BECOME POINTS OF COMPLIANCE.
3. AREA DRAINS – AS SOON AS WATER CAN FLOW INTO THESE DRAINS, HAYBALE OR SILT FENCE PROTECTION WILL BE INSTALLED AROUND THEM.
4. CURB OPENING INLETS – AS SOON AS WATER CAN FLOW INTO THESE DRAINS, INLET PROTECTION BMP'S MUST BE INSTALLED. SEE PHASE 3 – STREET CONSTRUCTION.
5. THE STORM SEWER CONTRACTOR WILL BE RESPONSIBLE FOR INSTALLING THESE BMP'S. IF WATER CANNOT FLOW INTO CURB INLETS UNTIL STREET CONSTRUCTION IS COMPLETE, THEN STREET CONTRACTOR WILL INSTALL INLET PROTECTION.
6. THE SUBDIVISION DEVELOPER WILL MAINTAIN THESE BMP'S ONCE INSTALLED.
7. ONCE ALL DISTURBED GROUND DRAINING TO AN INLET HAS BEEN RESTABILIZED WITH GRASS OR SOD, THE SUBDIVISION DEVELOPER WILL BE RESPONSIBLE FOR PERMANENTLY REMOVING THE INLET PROTECTION.

PHASE 3 – STREET CONSTRUCTION

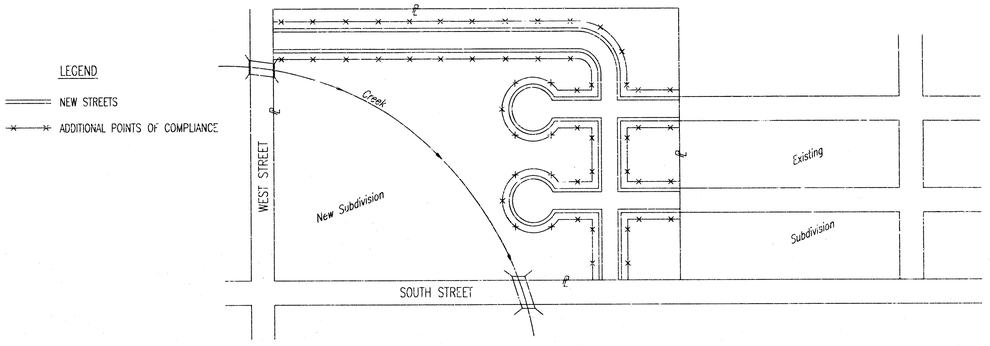

1. DURING THIS PHASE OF SUBDIVISION CONSTRUCTION, NEW STREETS ARE INSTALLED. ALL BMP'S INSTALLED DURING PHASE 1 AND 2 MUST STILL BE MAINTAINED. THE POINT OF COMPLIANCE NOW SHIFTS TO THE BACK OF CURB ALONG EACH STREET.
2. CURB OPENING INLET PROTECTION:
   A. SUMP AREAS – INLET PROTECTION SHALL BE PROVIDED WHEN STREET SUBGRADE WORK IS COMPLETED.
   B. NON-SUMP LOCATIONS – PROVIDE INLET PROTECTION AS SOON AS BASE COURSE ASPHALT IS INSTALLED, BEFORE THE SURFACE COURSE LIFT.
3. BMP'S WILL BE REQUIRED BACK OF CURB WHEREVER WATER CAN FLOW OVER THE CURB AND THE CURB HAS BEEN BACKFILLED TO WITHIN 3" OR LESS OF THE TOP OF CURB (SEE CURB BACKFILL DETAIL). FOR CURBS NOT YET ENTIRELY BACKFILLED (3" OR MORE BELOW TOP OF CURB), BMP'S WILL BE REQUIRED AT POINTS WHERE WATER BREAKS OVER CURB WHICH COULD RESULT IN THE PLACEMENT OF SEDIMENT IN THE GUTTER.
4. SEE DETAIL THIS SHEET ON BACK OF CURB PROTECTION.
5. THE BACK OF CURB PROTECTION SPECIFIED ON THIS PLAN MAY HAVE TO BE SUPPLIMENTED WITH HAYBALE OR SILT FENCE BMP'S AT LOCATIONS WHERE CONCENTRATED FLOW RESULTS IN SEDIMENT BEING CARRIED OVER THE EXCELSIOR MATS.
6. THE STREET CONTRACTOR WILL BE RESPONSIBLE FOR INSTALLING BACK OF CURB BMP'S.
7. THE INDIVIDUAL LOT OWNERS WILL BE RESPONSIBLE FOR MAINTAINING THE BACK OF CURB BMP'S IN FRONT OF THEIR LOTS UNTIL SUCH TIME AS ADJACENT DISTURBED EARTH IS STABILIZED WITH GRASS OR SOD.

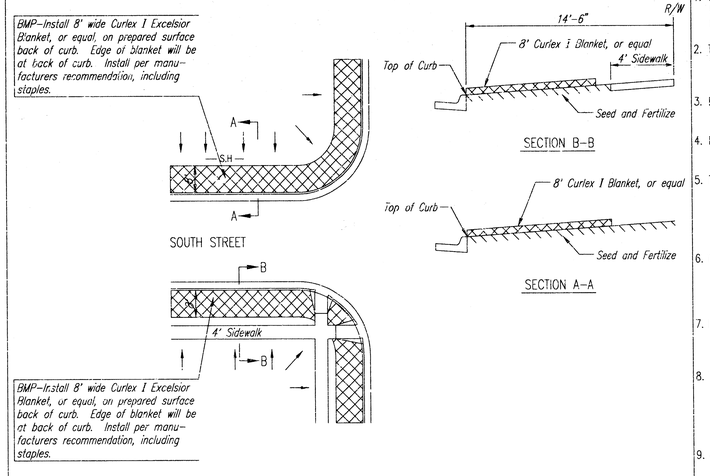

BACK OF CURB PROTECTION DETAIL

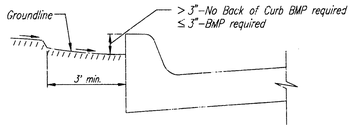

CURB BACKFILL DETAIL

GENERAL NOTES:

1. THE INTENT OF ALL BEST MANAGEMENT PRACTICES (B.M.P.'S) IS TO PREVENT ERODED SOIL FROM ENTERING DITCHES, STORM SEWERS, OR ANY OTHER DRAINAGE FEATURE.
2. THIS SHEET IS INTENDED TO PROVIDE GUIDELINES AS TO WHAT TYPE OF BMP'S WILL BE INSTALLED DURING THE CONSTRUCTION PROCESS. CONTRACTORS ARE EXPECTED TO BID PROJECTS ACCORDINGLY.
3. BMP'S SHALL BE MAINTAINED DURING THE CONSTRUCTION PROCESS TO REMAIN EFFECTIVE. MAINTENANCE SHALL BE AS INDICATED ON THE BMP DETAIL SHEETS.
4. PERSONS DESTROYING BMP'S SHALL BE RESPONSIBLE FOR IMMEDIATELY REPAIRING THEM OR INSTALLING SUITABLE REPLACEMENT BMP'S.
5. THE DEVELOPMENT OF ANY SUBDIVISION THAT DISTURBS 5 ACRES OR MORE WILL REQUIRE A FEDERAL/STATE NPDES STORMWATER PERMIT. THE PREPARATION OF A STORMWATER POLLUTION PREVENTION PLAN IS REQUIRED. EROSION CONTROL BMP'S ARE REQUIRED. THE DETAILS SHOWN ON THIS SHEET ARE THE MINIMUM STANDARDS TO BE SHOWN ON POLLUTION PREVENTION PLAN.
6. FOR SUBDIVISIONS SMALLER THAN 5 ACRES, SOIL EROSION BMP'S ARE REQUIRED. ALSO, DEVELOPERS AND CONTRACTORS ARE ENCOURAGED TO DEVELOP POLLUTION PREVENTION PLANS FOR EACH PROJECT PRIOR TO CONSTRUCTION.
7. FAILURE TO USE AND MAINTAIN BMP'S IS A VIOLATION OF SECTION 16.32 OF THE CITY CODE AND WILL SUBJECT THE SUBDIVISION DEVELOPER AND CONTRACTORS TO THE PENALTIES PROVIDED THEREIN.
8. THE APPLICATION OF BMP'S SHOWN ON THIS SHEET IS FOR SITUATIONS NORMALLY ENCOUNTERED. FROM TIME TO TIME, SITUATIONS WILL ARISE THAT MAY REQUIRE A DIFFERENT BMP OTHER THAN THAT SHOWN. BMP'S, OTHER THAN THOSE SHOWN, MAY BE UTILIZED SO LONG AS THEY ARE EFFECTIVE AND MAINTAINED.
9. A STABILIZED EARTH SURFACE IS DEFINED AS ONE THAT IS HARD SURFACED WITH CONCRETE, ASPHALT, OR THE LIKE, OR ONE ON WHICH 70% OF THE GRASS HAS GERMINATED ON THE ENTIRE SURFACE

CITY OF WICHITA

SOIL EROSION BMPS SUBDIVISION DEVELOPMENT PROCESS

CHRISTOPHER M. CARRIER, P.E.
STORM WATER ENGINEER

PROJECT NUMBER	OCA NO.
468-83199	

DATE	SHEET 17 OF 18
MAY 2001	

G:\CIVIL\95198\0126A\WR198E\0126-BE14.DWG Wed Feb 06 09:35:22 2002
DSNR: DEP OPER: DEP SCALE: 1=1.00
X:\STANDARDS\Standards Wichita\SEBMP_SUBDIVISION 06-05-2001 01:57:53 pm

PC 91-6A 1/2

THE LEGACY ADDITION

AN ADDITION TO WICHITA SEDGWICK COUNTY, KANSAS

FINAL PLAT

MINIMUM PAD ELEVATION			
LOWEST OPENING			
LOT	BLOCK	ELEVATION CITY DATUM	ELEVATION USGS DATUM
5-11	1	9S.00	1282.4
1-7	2	9S.00	1282.4
14-25	2	9S.00	1282.4
32-43	2	9S.00	1282.4
52-66	2	9S.00	1282.4
12-27	6	9S.00	1283.4
13-18	8	9S.00	1282.4
1-8	9	9S.00	1282.4
1-4	10	9S.00	1282.4
1-24	3	9S.5	1283.9
1-4	4	9S.5	1283.9
1-8	5	9S.5	1283.9
1-11	6	9S.5	1283.9
1-7	7	9S.5	1283.9
1-9	8	9S.5	1283.9
5-7	10	9S.5	1283.9
1-13	11	9S.5	1281.9

LEGEND
- ● – Iron
- U.E. – Utility Easement
- D.E. – Drainage Easement

SCALE: 1" = 100'

N

LIBRARY COPY
SEDGWICK COUNTY, KANSAS
REGISTER OF DEEDS