STORM WATER DRAIN #208

to serve

HARVEST RIDGE ADDITION

CITY OF WICHITA, KANSAS

James Armour, P.E. Acting City Engineer

Project Number

468-83662

O.C.A. Number

751351

GENERAL NOTES:

1. Contractor will be required to provide notice to utility companies a minimum of twenty-four (24) hours prior to any excavation, as follows:

   Kansas One-Call 687-2470

   The Contractor must notify the following in case of an emergency:

Cox Communications	262-4270
Kansas Gas Service	1-888-482-4950
Westar Energy	383-8650
Aquila Energy	1-800-303-0357
Southwestern Bell	268-2245
City of Wichita Water Dept.	268-4563
City of Wichita Sewer Maint.	268-4024
City of Wichita Storm Sewer Maint.	268-4080
City of Wichita Traffic Maint.	268-4034
Conoco Pipeline Co.	1-800-231-2551
Williams Pipeline Co.	529-6600
Phillips Pipeline Co.	1-800-766-8230

2. Utility service lines, poles, valve boxes, meters, and etcetera are to be adjusted as necessary by others prior to construction unless the plans specifically call for their adjustment by the Contractor or unless the plans specifically identify a utility to be adjusted by its owner during construction. Existing utilities and their location, as shown on the plans, represent the best information obtainable for design. The Contractor will be required to work around existing utilities within the right-of-way which do not conflict with proposed construction.

3. Rubble from the removal of miscellaneous structures and excess excavation which is to be wasted shall be disposed of on sites to be provided by the Contractor. These sites shall be approved by the Engineer as to suitability, appearance an site location. Locations, in the opinion of the Engineer, will leave an unsightly appearance will not be approved. All disposal sites must be approved by the Kansas Department of Health and Environment. Material either stockpiled or disposed of in a flood plain would require a Kansas State Board of Agriculture permit. Any material dumped in waters of the United States or wetlands is subject to U.S. Corps. of Engineers permitting regulations. Any material buried or stockpiled beyond approved construction limits would require additional archaeological investigations unless buried in a previously approved borrow location.

4. Trees and shrubs in public right-of-way which are in direct conflict with proposed new construction shall be removed by the Contractor with the Engineer's approval. Trees and shrubs which are not in direct conflict with proposed new construction shall be saved and protected from damage.

5. The Contractor shall give all property owners and/or tenants of developed property abutting the construction of this project a minimum of ten (10) days advance notice prior to start of construction.

6. The Contractor shall be responsible for preserving property irons. The Contractor will be required to re-establish any property irons which are damaged or destroyed by his construction operations. Such irons shall be re-established by a licensed land surveyor in accordance with state laws

7. All areas disturbed by construction operations shall be seeded in accordance with the following specifications.

   All of Reserve "A", State Highway Right-of-Way, Drainage Easement and any other disturbed area shall be seeded and mulched as follows: (Permanent Seeding)

   SEED -- Kansas Premium Fescue Blend; 8#/1000 Sq. Ft.
   FERTILIZER -- 12-24-12 Ratio at 350 Lbs./Ac.
   MULCH -- 2 Tons Prairie Hay / Acre

8. This project is subject to a current SWPP Plan. Contractor shall comply with any unusual requirements as necessary for site to be in compliance during construction.

Scale: 1" = 150'



Benchmark

BM #1: Small RR spike in 2nd PP north of K-42 Highway, west side of Maize
Elev. = 143.61 (City Datum)

BM #2: Small RR spike in PP east of East 1/4 Corner (G)
Elev. = 147.00 (City Datum)

BM #3: "□" Top Headwall southeast corner K-42 Highway and Maize (County BM with City Datum
Elev. = 144.04 (City Datum)

Sheet Index

Title Sheet	1
SWS Line 1	2-3
Std. Shallow Manhole Detail	4
Ring & Lid Detail	5
Headwall Detail	6
Erosion Control Plan	7
Erosion Control BMP's	8-9
Copy of Plat	10

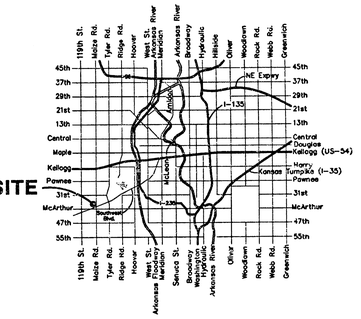

Vicinity Map

04/20/2004

April 2004

BAUGHMAN COMPANY P.A.
ENGINEERING, SURVEYING, & PLANNING
316-262-7271 • 315 ELLIS • WICHITA, KANSAS 67211

Benchmarks:

BM #1: Small RR spike in 2nd PP north of K-42 Highway, west side of Maize
Elev. = 143.61 (City Datum)

BM #2: Small RR spike in PP east of East 1/4 Corner (G)
Elev. = 147.00 (City Datum)

BM #3: "□" Top Headwall southeast corner K-42 Highway and Maize (County BM with City Datum
Elev. = 144.04 (City Datum)

Sta. 0+00, Line 1, Begin construction of ditch. Match flowline at existing box.

Ditch flowline may be re-aligned as needed in the field to allow for trees.

CAUTION! Ex. 6" steel gas line crossing. Contact Kansas Gas Service prior to construction to confirm line has been lowered.

Scale: 1" = 20' Horizontal
1" = 5' Vertical
* = Iron

Install hay bale barrier per detail, sheet 6.

Sta 4+83.10, Line 1
Construct KDOT Type 1 Ditch Inlet.
Top Elev. = 140.00
Match Point

Sta 3+54 to Sta 4+64
Install 110.0 L.F. 36" steel casing by boring and jacking.

Trim trees only as needed. Trees to be removed with Engineer's approval only. Cost incidental to "Site Clearing & Restoration".

Regrade ditch from end of proposed RCP to existing wooden box culvert to ensure positive drainage. Cost to be incidental to "Site Clearing & Restoration".

Sta 3+39.01, Line 1
Begin construction of 24" RCP w/ end section.
Install 92.0 S.Y. light stone rip-rap as indicated.

Transition exist. ditch into new ditch.

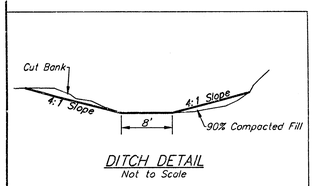

DITCH DETAIL
Not to Scale

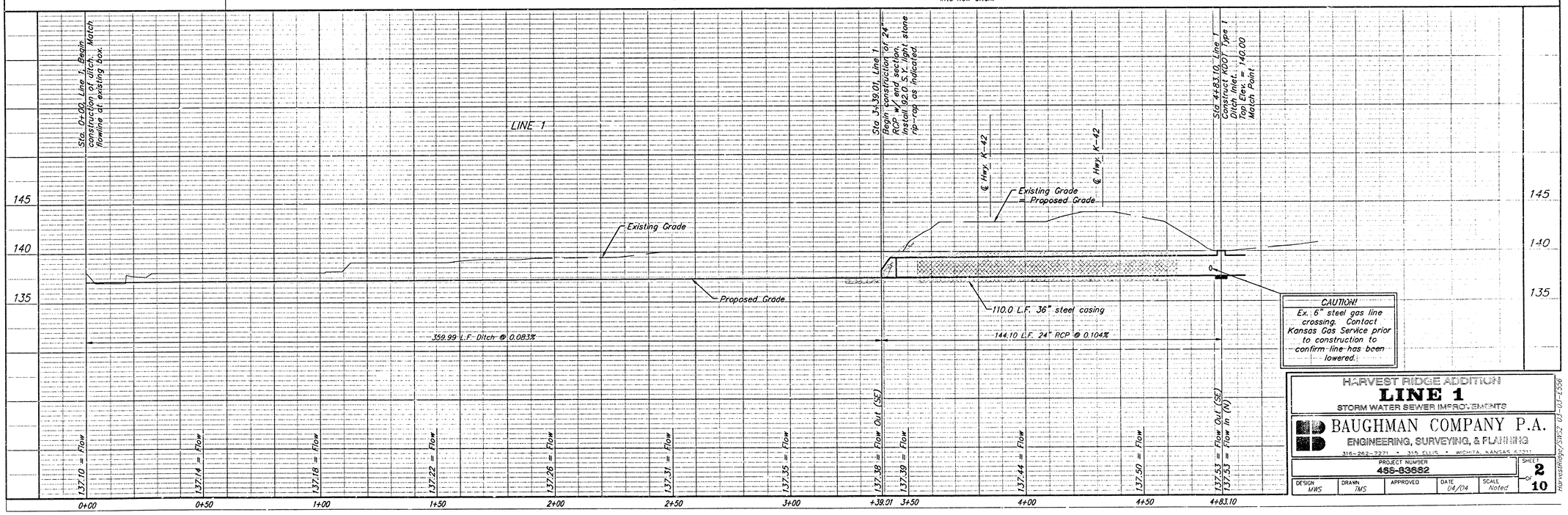

HARVEST RIDGE ADDITION

LINE 1

STORM WATER SEWER IMPROVEMENTS

BAUGHMAN COMPANY P.A.
ENGINEERING, SURVEYING, & PLANNING
316-262-7271 • 315 ELLIS • WICHITA, KANSAS 67211

PROJECT NUMBER	SHEET
455-83582	2 OF 10

DESIGN	DRAWN	APPROVED	DATE	SCALE
MWS	TMS		04/04	Noted

Plotted: Mar 03, 2004 - 9:52am

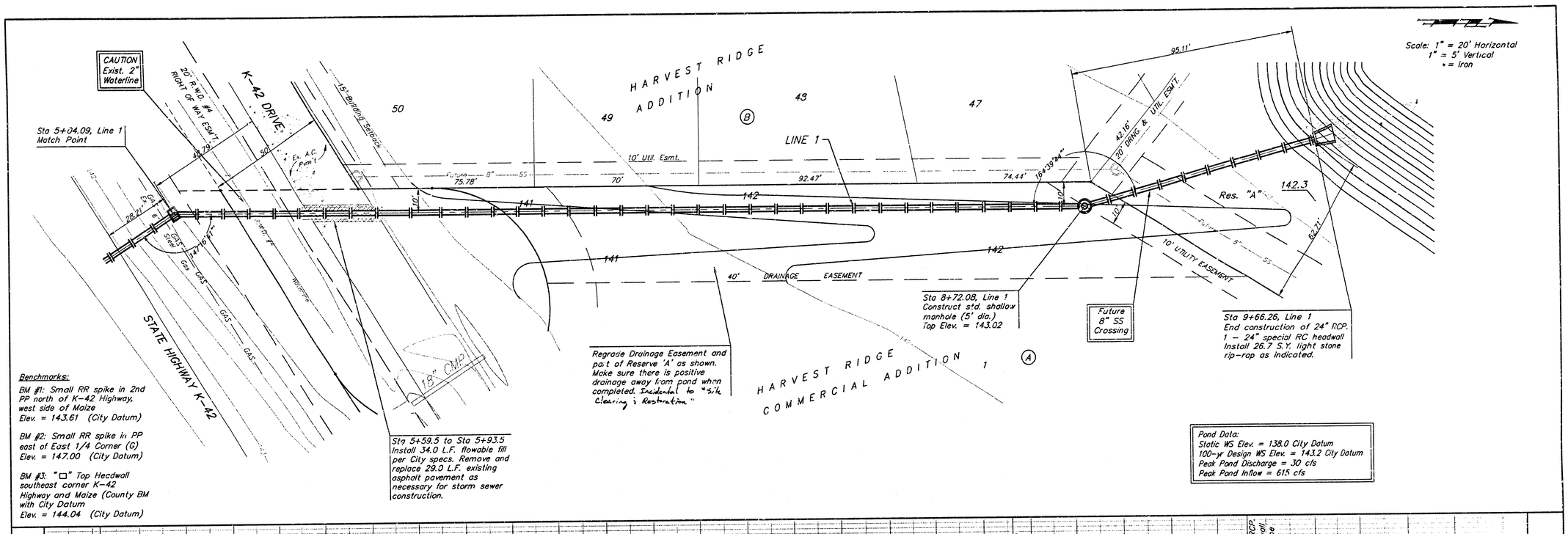

Benchmarks:

BM #1: Small RR spike in 2nd PP north of K-42 Highway, west side of Maize
Elev. = 143.61 (City Datum)

BM #2: Small RR spike in PP east of East 1/4 Corner (G)
Elev. = 147.00 (City Datum)

BM #3: "□" Top Headwall southeast corner K-42 Highway and Maize (County BM with City Datum
Elev. = 144.04 (City Datum)

Pond Data:
Static WS Elev. = 138.0 City Datum
100-yr Design WS Elev. = 143.2 City Datum
Peak Pond Discharge = 30 cfs
Peak Pond Inflow = 61.5 cfs

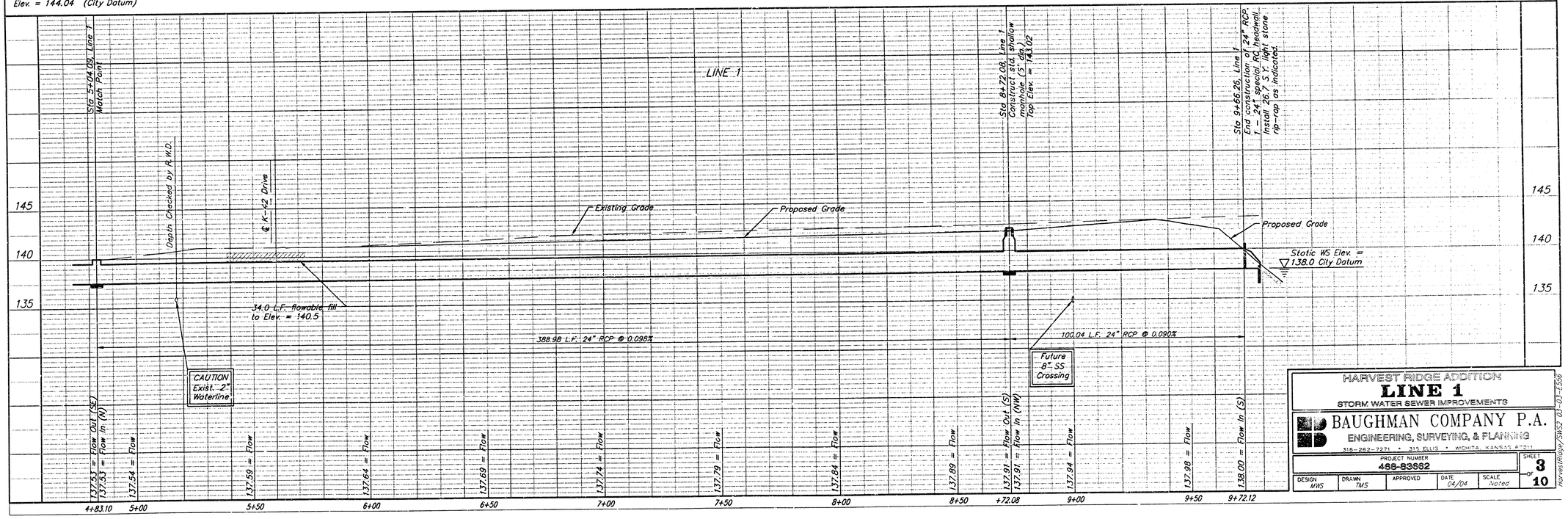

HARVEST RIDGE ADDITION
LINE 1
STORM WATER SEWER IMPROVEMENTS

BAUGHMAN COMPANY P.A.
ENGINEERING, SURVEYING, & PLANNING
316-262-7271 • 315 ELLIS • WICHITA, KANSAS 67211

PROJECT NUMBER 468-83662
SHEET 3 OF 10

DESIGN	DRAWN	APPROVED	DATE	SCALE
MWS	TMS		04/04	Noted

HarvestRidge/SW52 03-03-1556

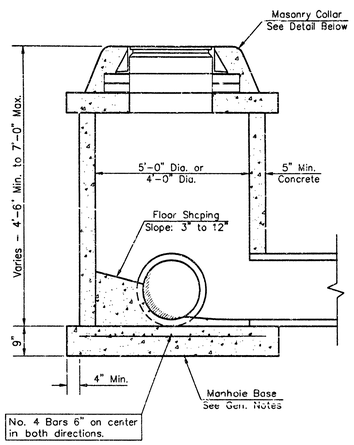

SHALLOW TYPE "P" MANHOLE

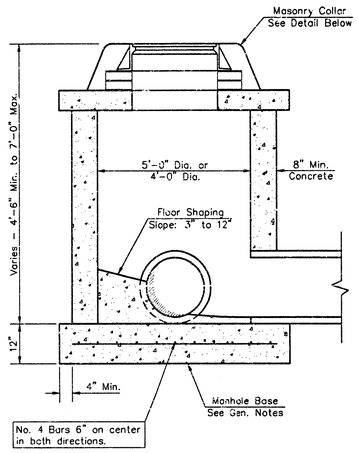

SHALLOW TYPE "C" MANHOLE

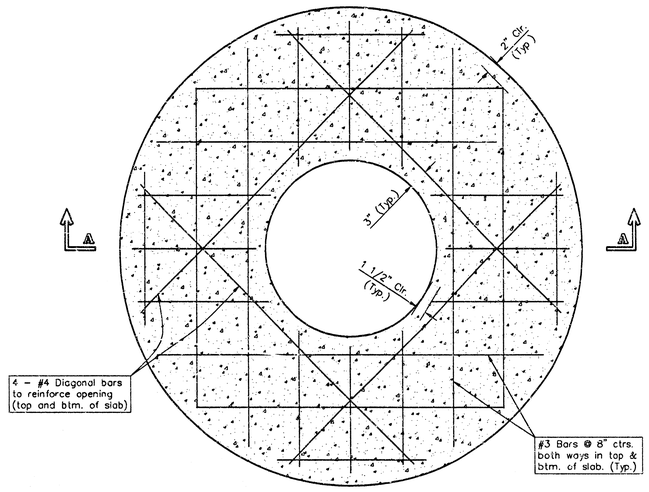

PLAN

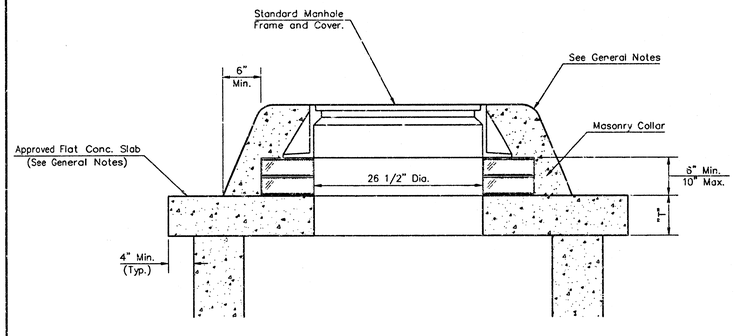

MASONRY COLLAR DETAIL

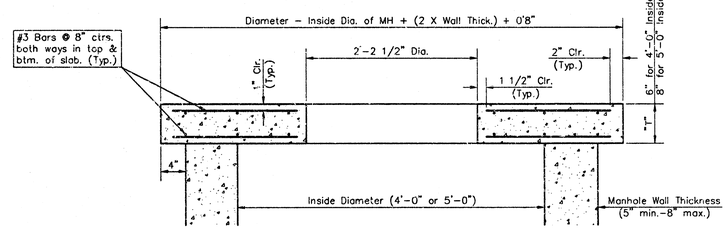

SECTION A–A

FLAT CONCRETE SLAB DETAILS

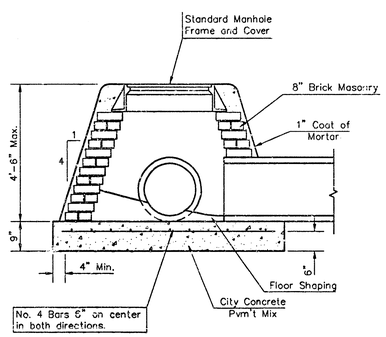

SPECIAL SHALLOW TYPE "A" MANHOLE

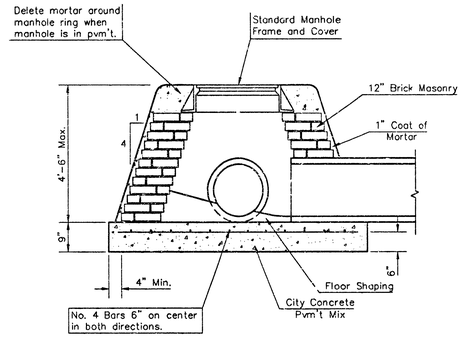

SPECIAL SHALLOW TYPE "B" MANHOLE

GENERAL NOTES

1. Mortar used in masonry construction shall contain 8 sacks of cement per cubic yard. Concrete used in manhole bases shall conform to the requirements of concrete for concrete pavement construction as specified in the city standard paving specifications using city concrete cement mix without air entraining admixture. Mortar shall be placed around the manhole ring as shown on the drawings when manholes are constructed in unpaved areas. Manholes constructed where pipe sizes are smaller than 24" shall have an inside diameter of 4'. Manholes constructed where pipe sizes are 24" or larger shall have an inside diameter of 5'. Completed manhole shall be without leaks and water tight.

2. Reinforcing steel shall be installed in the manhole bases and shall consist of no. 4 bars placed on 6" centers in both directions. The manhole base reinforcement shall be placed 6" above the bottom of the manhole base. All costs for furnishing and installing reinforcing steel shall be included in the unit price bid for the manhole.

3. The floors of all manholes shall be shaped with flow channels such that the manholes will be self cleaning and free of areas where solids could be deposited as sewage flows through the manhole from all inlet pipes to the outlet pipe. Flow channels shall be formed to match the bottom halves of the inflowing pipes and the outflowing pipe as shown by the drawings. Manhole floors shall have slopes of 3 inches per foot in the areas outside of the flow channels sloped toward the flow channels. Pipes laid through manholes shall have the top half removed to neat lines for the full inside diameter of the manhole. Manhole floors shall then be shaped around the bottom half of the pipe which forms the flow channel.

4. Pipes installed within the excavation made for the manhole shall be cradled with concrete to the limits of the manhole excavation. When clay pipe is used, the cradle shall extend to the first joint outside the manhole. The cradle shall be terminated at the clay pipe joint in a manner which will maintain the flexibility of the joint. Cost of cradle within manhole excavation or to clay pipe joints adjacent to manhole shall be included in the unit price bid for the manhole.

5. Manhole cover castings and manhole frame castings shall conform to the requirements as indicated in the standard specifications and as shown in the standard detail drawings.

6. The crowns of inflowing pipes shall never be set lower than the crown of the outflowing pipe.

7. Standard shallow manholes type "P" and "C" shall be paid for at the unit price bid per each for the type and diameter indicated. All standard shallow manhole diameters will be 4' unless indicated otherwise.

8. All brick used in manhole construction shall meet Grade SW of ASTM C652 or C62-87.

CITY OF WICHITA, KANSAS

STD. SHALLOW MANHOLES

TYPE 'P' AND TYPE 'C'

BAUGHMAN COMPANY P.A.
ENGINEERING, SURVEYING, & PLANNING
316-262-7271 • 315 ELLIS • WICHITA, KANSAS 67211

PROJECT NUMBER	SHEET
468-83682	4 OF 10

DESIGN	DRAWN	APPROVED	DATE	SCALE
STAFF	STAFF	STAFF	07/03	NONE

CITY STD SHWMHZ.DWG 03-03-ES

MANHOLE FRAME AND COVER DETAIL

ADOPTED AS STANDARD DESIGN BY
CITY OF WICHITA, KANSAS

MANHOLE COVER
Weight = 180 Lbs.

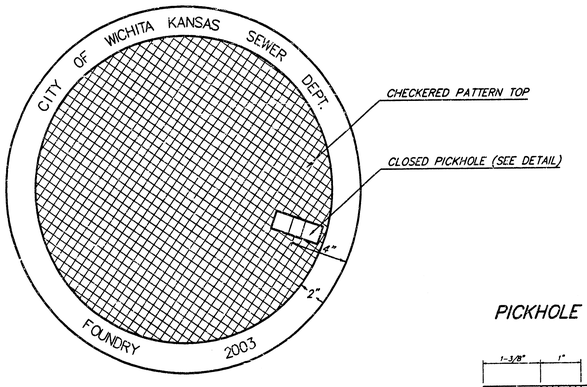

TOP VIEW

PICKHOLE DETAIL

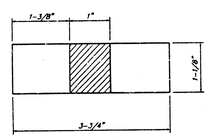

TOP VIEW

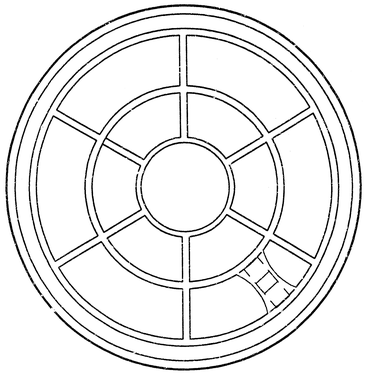

BOTTOM VIEW

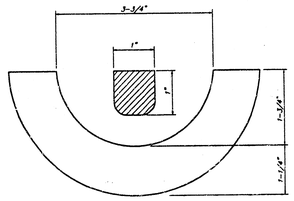

SECTION VIEW

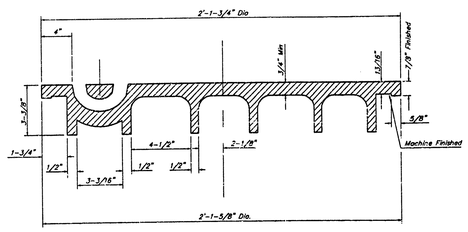

SECTION VIEW

MANHOLE FRAME
Weight = 145 Lbs.

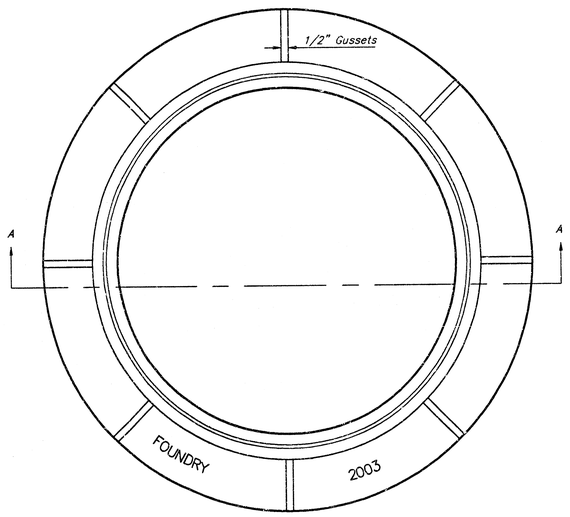

TOP VIEW

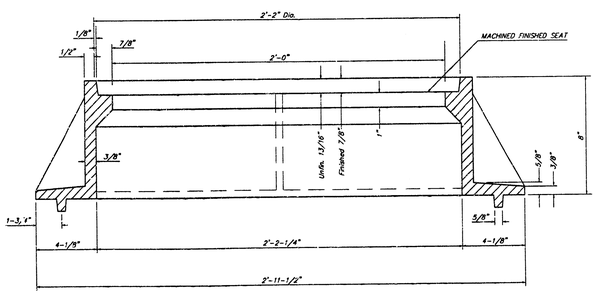

SECTION A–A

GENERAL NOTES

MANHOLE CASTINGS SHALL BE MANUFACTURED USING GOOD QUALITY GRAY IRON CONFORMING TO CLASS 30 OF A.S.T.M. DESIGNATION A-48. DIMENSIONS AND WEIGHTS SHOWN ON THE DETAILED DRAWINGS SHALL BE CONSIDERED AS MINIMUM REQUIREMENTS AND ANY DEVIATIONS FROM THE DIMENSIONS SHOWN MUST BE SPECIFICALLY APPROVED. THE FINISHED CASTINGS SHALL BE OF UNIFORM QUALITY, FREE FROM BLOWHOLES, POROSITY, HARD SPOTS, SHRINKAGE DISTORTIONS OR OTHER DEFECTS.

MANHOLE CASTINGS SHALL BE COATED WITH AN ASPHALT PAINT RESULTING IN A SMOOTH, TOUGH AND TENACIOUS COATING WHICH IS NOT BRITTLE OR TACKY.

MANHOLE CASTINGS SHALL BE MANUFACTURED SUCH THAT A COVER MANUFACTURED BY ANY ONE FOUNDRY WILL FIT INTERCHANGEABLY INTO A FRAME MANUFACTURED BY ANOTHER FOUNDRY AND STILL MEET ALLOWABLE CLEARANCES AND NON-ROCKING REQUIREMENTS. THIS WILL REQUIRE MANUFACTURING OF THE MATCHING FACES ON THE COVER AND THE FRAME TO CLOSE TOLERANCES.

THE OUTSIDE CIRCUMFERENCE OF THE VERTICAL FACE OF THE COVER AND THE INSIDE CIRCUMFERENCE OF THE VERTICAL FACE IN THE FRAME RECESS SHALL BE MANUFACTURED TO TOLERANCES SUCH THAT THE CLEARANCE BETWEEN THE COVER AND FRAME WILL NOT EXCEED 1/8" AT ANY POINT AROUND THE CIRCUMFERENCE OF THE COVER. THE SEATING SURFACES BETWEEN THE COVER AND FRAME SHALL BE MACHINED SUCH AS THESE SURFACES SHALL MAKE FULL CONTACT FOR THEIR FULL CIRCUMFERENCE TO PRECLUDE THE COVER FROM ROCKING IN THE FRAME.

THE MANHOLE FRAME AND COVER SHALL BE MARKED WITH LETTERING INDICATING THE NAME OF THE MANUFACTURER AND THE YEAR WHEN THE COVER OR FRAME WAS CAST. THE COVER SHALL BE FURTHER IDENTIFIED WITH REGARDS TO OWNERSHIP USING LETTERS AT LEAST 1 INCH IN HEIGHT. THIS IDENTIFICATION SHALL BE "CITY OF WICHITA SEWER DEPARTMENT". THE WORD DEPARTMENT MAY BE ABBREVIATED. THE TEXTURE OF THE TOP SURFACE OF THE COVER SHALL BE MANUFACTURED IN A CHECKERED PATTERN DESIGN AS INDICATED ON THE DRAWINGS. SMOOTH BLOCKOUTS SHALL BE UTILIZED TO HIGHLIGHT THE LETTERING ON THE COVER SURFACE. THE TOTAL AREA OF SMOOTH SURFACE BLOCKOUT SHALL NOT EXCEED THE AREA AS INDICATED ON THE DRAWING. POSITIONING OF SMOOTH BLOCKOUTS AND LETTERING MAY VARY FROM THAT SHOWN ON THE DETAILED DRAWING.

MANHOLE FRAME AND COVER DETAIL
ADOPTED AS STANDARD DESIGN BY
CITY OF WICHITA, KANSAS

BAUGHMAN COMPANY P.A.
ENGINEERING, SURVEYING, & PLANNING
316-262-7271 • 315 ELLIS • WICHITA, KANSAS 67211

PROJECT NUMBER 468-83682 | SHEET 5 OF 10

DESIGN	DRAWN	APPROVED	DATE	SCALE
STAFF	STAFF		04/03	NONE

L:\Davis\Manning 03-03-E568

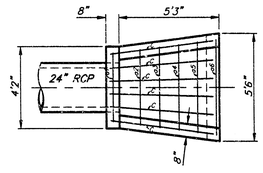

PLAN

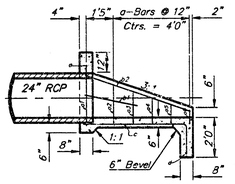

SECTION

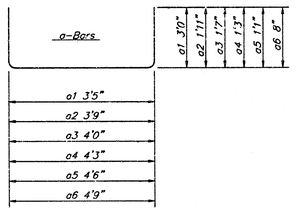

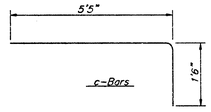

REBAR SCHEDULE

Bar	Shape	No.	Length	Weight
a1	⊔	1	9'5"	6.29
a2	⊔	1	7'7"	5.07
a3	⊔	1	7'2"	4.79
a4	⊔	1	6'9"	4.51
a5	⊔	1	6'4"	4.23
a6	⊔	1	6'1"	4.06
b1	—	2	2'9"	3.67
b2	—	2	5'10"	7.79
c	⊓	6	6'11"	27.72
d	—	1	5'0"	3.37
e	—	1	3'10"	2.56
Total Rebar			74.03 Lbs.	
Concrete			1.40 C.Y.	

A Deduction in Concrete Quantities Has Been Made for Pipe Openings Through the Headwall

* Field Bend or Cut Reinforcing as Required for Clearance.

All Concrete Reinforcement to be #4 Rebar

All Rebar to Have Min. of 1 1/2" Conc. Cover

GENERAL NOTES

1. ALL PIPES SHALL BE FLUSH CUT PRIOR TO BEING CAST INTO CONCRETE HEADWALL
2. CONCRETE USED IN HEADWALL CONSTRUCTION SHALL BE SAME AS PER CITY STANDARD PAVING MIX EXCEPT THAT IT SHALL HAVE A MINIMUM 28 DAY COMPRESSIVE STRENGTH OF 4000 PSI.
3. ALL EXPOSED EDGES SHALL BE BEVELED 1/2".
4. REINFORCING STEEL SHALL COMPLY TO A.S.T.M. DESIGNATION A615 GRADE 60. ALL DIMENSIONS RELATIVE TO REINFORCING STEEL ARE TO CENTERLINE OF BAR UNLESS OTHERWISE NOTED.
5. THE "REIN. CONC. HEADWALL" SHALL BE PAID FOR AT THE UNIT PRICE BID PER EACH IN PLACE WHICH SHALL INCLUDE ALL LABOR, MATERIALS, EXCAVATION, CONCRETE, REINFORCING STEEL AND ALL OTHER INCIDENTAL ITEMS NECESSARY TO COMPLETE THE WORK. MATERIAL QUANTITIES SHOWN ARE FOR INFORMATION ONLY.

HEADWALL FOR 24" RCP

HEADWALL DETAIL

BAUGHMAN COMPANY P.A.
ENGINEERING, SURVEYING, & PLANNING
316-262-7271 • 315 ELLIS • WICHITA, KANSAS 67211

PROJECT NUMBER	SHEET
468-83662	6 OF 10

DESIGN	DRAWN	APPROVED	DATE	SCALE
MWS	JAK			NONE

\Hdwall-swd out 03-03-E556

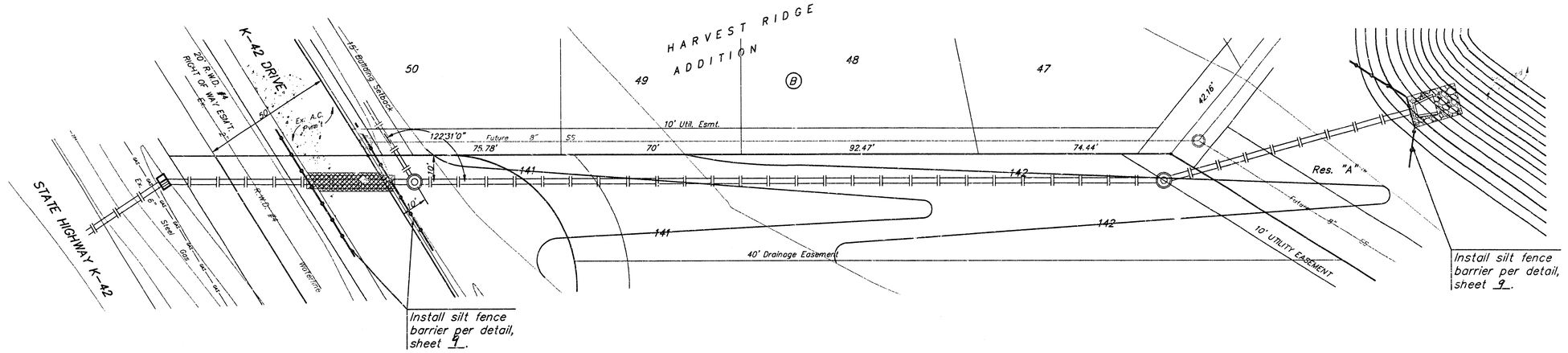

NOTE:

Erosion Control Devices show on this plan sheet are the minimum required. The Contractor shall install as many devices as necessary to fulfill Best Management Practice. Cost of Erosion Control Devices shall be incidental to bid item "Erosion Control BMP's".

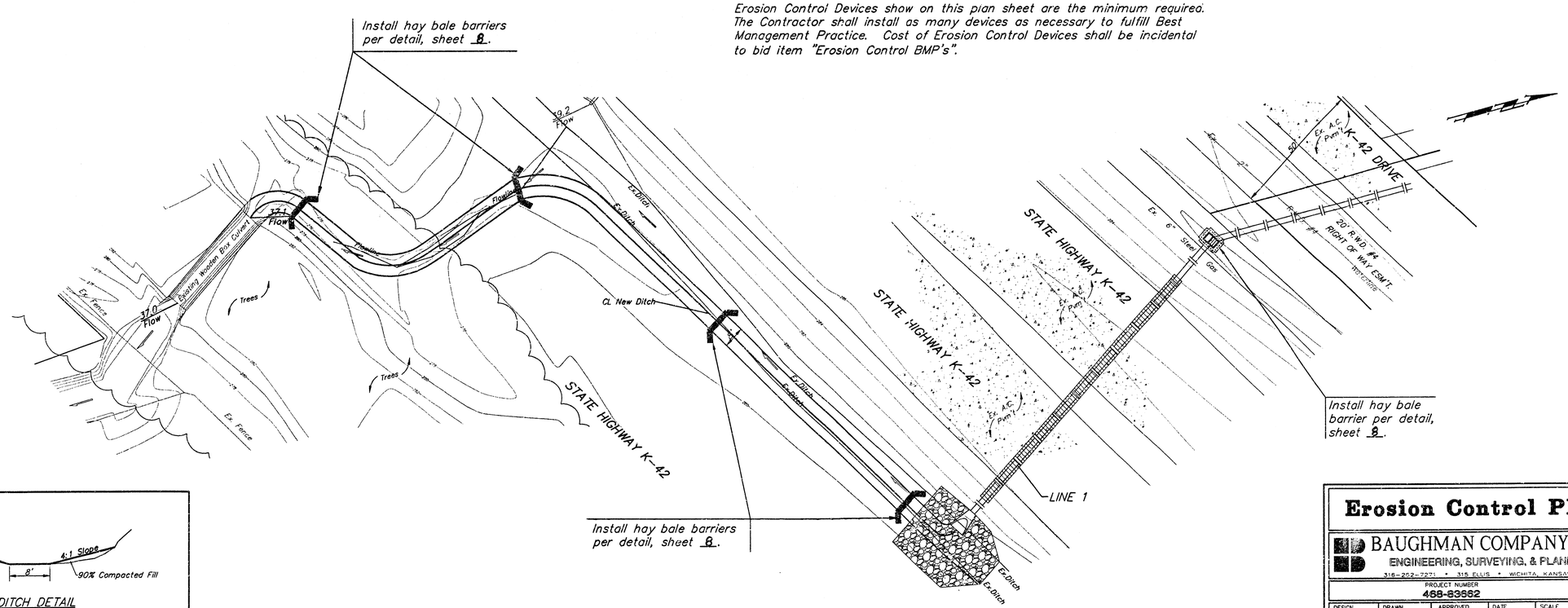

DITCH DETAIL

Erosion Control Plan

BAUGHMAN COMPANY P.A.
ENGINEERING, SURVEYING, & PLANNING
316-262-7271 • 315 ELLIS • WICHITA, KANSAS 67211

PROJECT NUMBER	SHEET
468-83882	7 of 10

DESIGN	DRAWN	APPROVED	DATE	SCALE
MWS	MWS		03/31/04	NONE

01-01-E556

NOTE: Point A must be higher than Point B so that water flows over the bales and not around them.

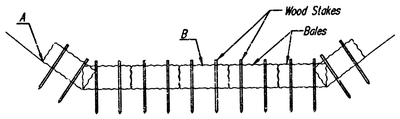

STRAW BALE DITCH CHECKS

Material Specification:

Bale ditch checks may be constructed of wheat straw, oat straw, prairie hay, or bromegrass hay that is free of weeds declared noxious by the Kansas State Board of Agriculture.
The stakes used to anchor the bales should be a hardwood material with the following minimum dimensions: 2" square (nominal) by 4' long.
Optional: The downstream scour apron should be constructed of a double-netted straw erosion-control blanket at least 6' wide.
Optional: The metal landscape staples used to anchor the erosion-control blanket should be at least 8" long.

Placement:

Bale ditch checks should be placed perpendicular to the flowline of the ditch.
The ditch check should extend far enough so that the ground level at the ends of the check is higher than the top of the lowest center bale. This prevents water from flowing around the check.
Checks should not be placed in ditches where high flows are expected. Rock checks should be used instead.
Bales should be placed in ditches with slopes of 6% or less. For slopes steeper than 6%, rock checks should be used.
The following table provides check spacing for a given ditch grade:

Ditch grade (%)	Check Spacing (feet)
0.5	200
1.0	200
2.0	100
3.0	65
4.0	50
5.0	40
6.0	30

Proper installation method:

Excavate a trench perpendicular to the ditch flowline that is 4" deep and a bale's width wide. Extend the trench in a straight line along the entire length of the proposed ditch check. Place the soil on the upstream side of the trench-it will be used later.
Optional: On the downstream side of the trench, roll out a length of erosion-control blanket (scour apron) equal to the length of the trench. Place the upstream edge of the erosion-control blanket along the bottom upstream edge of the trench. The erosion control blanket should be anchored in the trench with one row of 8" landscape staples placed on 18" centers. The remainder of the erosion-control blanket (the portion that is not lying in the trench) will serve as the downstream scour apron. This section of the blanket should be anchored to the ground with 8" landscape staples placed around the perimeter of the blanket on 18" centers. The remainder of the blanket should be anchored using two evenly spaced rows of 8" landscape staples on 18" centers placed perpendicular to the flowline of the ditch.
Place the bales in the trench, making sure that they are butted tightly. Two stakes should be driven through each bale along the centerline of the ditch check, approximately 6" to 8" in from the bale ends. Stakes should be driven at least 12" into the ground.
Once all the bales have been installed and anchored, place the excavated soil against the upstream side of the check and compact it. The compacted soil should be no more than 3" to 4" deep and extend upstream no more than 24".

List of common placement/installation mistakes to avoid:

Do not place a bale ditch check directly in front of a culvert outlet. It will not stand up to the concentrated flow.
Do not place bale ditch checks in ditches that will likely experience high flows. They will not stand up to concentrated flow.
Follow prescribed ditch-check spacing guidelines. If spacing guidelines are exceeded, erosion will occur between the ditch checks.
Do not allow water to flow around the ditch check. Make sure that the ditch check is long enough so that the ground level at the ends of the check is higher than the top of the lowest center bale.
Do not place bale ditch checks in channels with shallow soils underlain by rock. If the check is not anchored sufficiently, it will wash out.
Bale ditch checks must be dug into the ground. Bales at ground level do not work because they allow water to flow under the check.

Inspection and Maintenance:

Bale ditch checks should be inspected every 7 days and within 24 hours of a rainfall of 1/2" or more. The following is a list of questions that should be addressed during each inspection:

Does water flow around the ditch check?
Does water flow under the ditch check?
Does water flow through spaces between abutting bales?
Are any bales and/or scour aprons (optional) dislodged?
Are bales decomposing due to age and/or water damage?
Does sediment need to be removed from behind the ditch check?

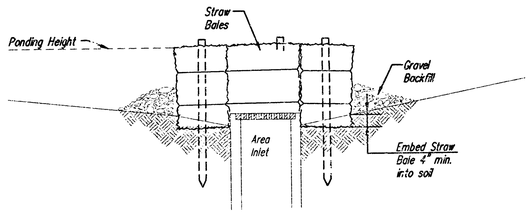

SECTION A-A

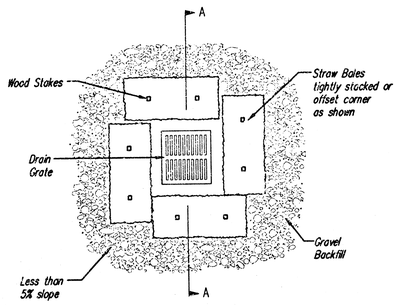

STRAW BALE BARRIERS FOR AREA INLETS
(INLET PROTECTION)

Material Specification:

Bale area inlet barriers should be constructed of wheat straw, oat straw, prairie hay, or bromegrass hay that is free of weeds declared noxious by the Kansas State Board of Agriculture.
The stakes used to anchor the bales should be a hardwood material with the following minimum dimensions: 2" square (nominal) by 4' long.

Placement:

Bale area inlet barriers should be placed directly around the perimeter of a drop inlet.
When a bale area inlet barrier is located near an inlet that has steep approach slopes, the storage capacity behind the barrier is drastically reduced. Timely removal of sediment must occur for a barrier to operate properly in this location.

Proper installation Method:

Excavate a trench around the perimeter of the area inlet that is at least 4" deep by a bale's width wide.
Place the bales in the trench, making sure that they are butted tightly. Some bales may need to be shortened to fit into the trench around the area inlet. Two stakes should be driven through each bale, approximately 6" to 8" in from the bale ends.
Stakes should be driven at least 12" into the ground.
Once all the bales have been installed and anchored, place the excavated soil against the receiving side of the barrier and compact it. The compacted soil should be no more than 3" to 4" deep.
Note: When a bale area inlet barrier is placed in a shallow median ditch, make sure that the top of the barrier is not higher than the paved road. In this configuration, water may spread onto the roadway causing a hazardous condition.

List of common placement insiallation mistakes to avoid:

Bales should be placed directly against the perimeter of the area inlet. This allows overlapping water to flow directly into the inlet instead of onto nearby soil causing scour.
Bale area inlet barriers must be dug into the ground. Bales at ground level do not work because they allow water to flow under the barrier.

Inspection and Maintenance:

Bale area inlet barriers should be inspected every 7 days and within 24 hours of a rainfall 1/2" or more. The following is a list of questions that should be addressed during each inspection:

Does water flow under the area inlet barrier?
Does water flow through spaces between abutting bales?
Are any bales dislodged?
Are bales decomposing due to age and/or water damage?
Does sediment need to be removed from behind the area inlet barrier?

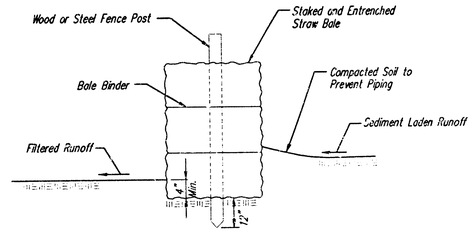

STRAW BALE BARRIERS

Material Specification:

Bale slope barriers may be constructed of wheat straw, oat straw, prairie hay, or bromegrass hay that is free of weeds declared noxious by the Kansas State Board of Agriculture.
The stakes used to anchor the bales should be a hardwood material with the following minimum dimensions: 2" square (nominal) by 4' long.

Placement:

A slope barrier should be used at the toe of a slope when a ditch does not exist. The slope barrier should be placed on nearly level ground 5' to 10' away from the toe of a slope. The barrier is placed away from the toe of the slope to provide adequate storage for settling out sediment.
When practicable, bale slope barriers should be placed along contours to avoid a concentration of flow.
Bale slope barriers can also be placed along right-of-way fence lines to keep sediment from crossing onto adjacent property. When placed in this manner, the slope barrier will not likely follow contours.

Proper installation method:

Excavate a trench the length of the planned slope barrier that is 4" deep and a bale's width wide. Make sure that the trench is excavated along a single contour. When practicable, slope barriers should be placed along contours to avoid a concentration of flow. Place the soil on the upslope side of the trench for later use.
Place the bales in the trench, making sure that they are butted tightly. Two stakes should be driven through each bale along the centerline of the ditch check, approximately 6" to 8" in from the bale ends. Stakes should be driven at least 12" into the ground.
Once all the bales have been installed and anchored, place the excavated soil against the upslope side of the check and compact it. The compacted soil should be no more than 3" to 4" deep.

List of common placement/installation mistakes to avoid:

When practicable, do not place bale slope barriers across contours. Slope barriers should be placed along contours to avoid a concentration of flow. Concentrated flow over a slope barrier creates a scour hole on the downslope side of the barrier. The scour hole eventually undermines the bales and the barrier fails.
Do not place bale slope barriers in areas with shallow soils underlain by rock. If the barrier is not anchored sufficiently, it will wash out.
Bale slope barriers must be dug into the ground. Bales at ground level do not work because they allow water to flow under the barrier.

Inspection and Maintenance:

Bale slope barriers should be inspected every 7 days and within 24 hours of a rainfall of 1/2" or more. The following is a list of questions that should be addressed during each inspection:

Are there any points along the slope barrier where water is concentrating?
Does water flow under the slope barrier?
Does water flow through spaces between abutting bales?
Are any bales dislodged?
Are bales decomposing due to age and/or water damage?
Does sediment need to be removed from behind the slope barrier?

CITY OF WICHITA

SOIL EROSION BMP DETAILS

CHRISTOPHER M. CARRIER, P.E.
STORM WATER ENGINEER

PROJECT NUMBER	OCA NO.
468-83662	751351

DATE SEP 2003

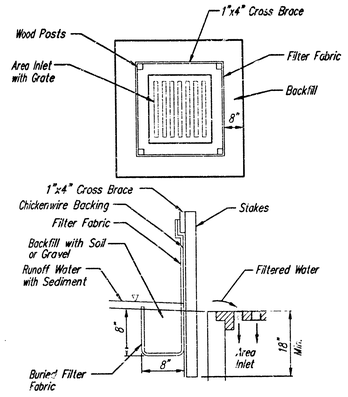

SILT FENCE BARRIERS FOR AREA INLETS
(INLET PROTECTION)

Material Specification:

Silt fence fabric should conform to the AASHTO M288 96 silt fence specification.
The wire or polymeric mesh backing used to help support the silt fence fabric should conform to the AASHTO M288 96 silt fence specification.
The posts used to support the silt fence fabric should be a hardwood material with the following minimum dimensions: 2" square (nominal) by 4' long.
The material used to frame the tops of the posts should be 1" by 4" boards.
Silt fence fabric and support backing should be attached to the wooden posts and frame with staples, wire, zip ties, or nails.

Placement:

Place a silt fence drop inlet barrier in a location where it is unlikely to be overtopped.
Water should flow through silt fence, not over it. Silt fence barriers for area inlets often fail when repeatedly overtopped.
When used as a barrierfor area inlets, silt fence fabric and posts must be supported at the top by a wooden frame.
When a silt fence barrier for area inlets is located near an inlet that has steep approach slopes, the storage capacity behind the barrier is drastically reduced. Timely removal of sediment must occur for a barrier to operate properly in this location.

Proper installation method:

Excavate a trench around the perimeter of the area inlet that is at least 8" deep by 8" wide.
Drive posts to a depth of at least 18" around the perimeter of the area inlet.
The distance between posts should be 4' or less. If the distance between two adjacent corner posts is more than 4', add another post(s) between them.
Connect the tops of all the posts with a wooden frame made of 1" by 4" boards. Use nails or screws for fastening.
Attach the wire or polymeric-mesh backing to the outside of the post/frame structure with staples, wire, zip ties, or nails.
Roll out a continuous length of silt fence fabric long enough to wrap around the perimeter of the area inlet. Add more length for overlapping the fabric joint. Place the edge of the fabric in the trench, starting at the outside edge of the trench. Line all three sides of the trench with the fabric. Backfill over the fabric in the trench with the excavated soil and compact. After filling the trench, approximately 24" to 36" of silt fence fabric should remain exposed.
Attach the silt fence to the outside of the post/frame structure with: staples, wire, zip ties, or nails. The joint should be overlapped to the next post.

Note: When a silt fence barrier for area inlet is placed in a shallow median ditch, make sure that the top of the barrier is not higher than the paved road. In this configuration, water may spread onto the roadway causing a hazardous condition.

List of common placement/installation mistakes to avoid:

Water should flow through a silt fence barrier for area inlet-not over it. Place a silt fence barrier for area inlet in a location where it is unlikely to be overtopped. Silt fence barrier for area inlets often fail when repeatedly overtopped.
Do not place posts on the outside of the silt fence barrier for area inlet. In this configuration, the force of the water is not resisted by the posts, but only by the staples (wire, zip-ties, nails, etc.). The silt fence will rip and fail.
Do not install silt fence barrier for area inlets without framing the top of the posts. The corner posts around area inlets are stressed in two directions whereas a normal silt fence is only stressed in one direction. This added stress requires more support.

Inspection and Maintenance:

Silt fence barrier for area inlets should be inspected every 7 days and within 24 hours of a rainfall of 1/2" or more. The following is a list of questions that should be addressed during each inspection:

Does water flow under the silt fence?
Does the silt fence sag excessively?
Has the silt fence torn or become detached from the posts?
Does sediment need to be removed from behind the area inlet barrier?

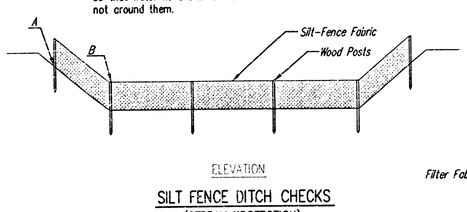

ELEVATION

SILT FENCE DITCH CHECKS
(STREAM PROTECTION)

Material Specification:

Silt fence fabric should conform to the AASHTO M288 96 silt fence specification.
The posts used to support the silt fence fabric should be a hardwood material with the following minimum dimensions: 2" square (nominal) by 4' long.
Silt fence fabric should be attached to the wooden posts with staples, wire, zip ties, or nails.

Placement:

Place silt fence in ditches where it is unlikely that it will be overtopped.
Water should flow through a silt fence ditch check, not over it. Silt fence ditch checks often fail when overtopped.
Silt fence ditch checks should be placed perpendicular to the flowline of the ditch.
The silt fence should extend far enough so that the ground level at the ends of the fence is higher than the top of the low point of the fence. This prevents water from flowing around the check.
Checks should not be placed in ditches where high flows are expected. Rock checks should be used instead.
Silt fence should be placed in ditches with slopes of 6% or less. For slopes steeper than 6%, rock checks should be used.

The following table provides check spacing for a given ditch grade:

Ditch grade (%)	Check Spacing (feet)
0.5	200
1.0	200
2.0	100
3.0	65
4.0	50
5.0	40
6.0	30

Proper installation method:

Excavate a trench perpendicular to the ditch flowline that is at least 12" deep by 6" wide.
Extend the trench in a straight line along the entire length of the proposed ditch check.
Place the soil on the upstream side of the trench for later use.
Roll out a continuous length of silt fence fabric on the downstream side of the trench.
Place the edge of the fabric in the trench starting at the top upstream edge of the trench.
Line two sides of the trench with the fabric as shown on detail. Backfill over the fabric in the trench with the excavated soil and compact. After filling the trench, approximately 24" to 36" of silt fence fabric should remain exposed.
Lay the exposed silt fence on the upstream side of the trench to clear an area for driving in the posts. Just downstream of the trench, drive posts into the ground to a depth of at least 24". Place posts no more than 4' apart.
Attach the silt fence to the anchored post with staples, wire, zip ties, or nails.

List of common placement/installation mistakes to avoid:

Water should flow through a silt fence ditch check-not over it. Place silt fence in ditches where it is unlikely that it will be overtopped. Silt fence installations quickly deteriorate when water overtops them.
Do not place silt fence posts on the upstream side of the silt fence fabric. In this configuration, the force of the water is not restricted by the posts, but only by the staples (wire, zip ties, nails, etc.). The silt fence will rip and fail.
Do not place a silt fence ditch check directly in front of a culvert outlet. It will not stand up to the concentrated flow.
Do not place silt fence ditch checks in ditches that will likely experience high flows. They will not stand up to concentrated flow.
Follow prescribed ditch check spacing guidelines. If spacing guidelines are exceeded, erosion will occur between the ditch checks.
Do not allow water to flow around the ditch check. Make sure that the ditch check is long enough so that the ground level at the ends of the fence is higher than the low point on the top of the fence.
Do not place silt fence ditch checks in channels with shallow soils underlain by rock. If the check is not anchored sufficiently, it will wash out.

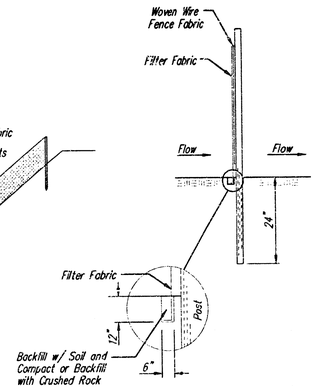

ANCHOR TRENCH DETAIL

Inspection and Maintenance:

Silt fence ditch checks should be inspected every 7 days and within 24 hours of a rainfall of 1/2" or more. The following is a list of questions that should be addressed during each inspection:

Does water flow around the ditch check?
Does water flow under the ditch check?
Does the silt fence sag excessively?
Has the silt fence torn or become detached from the posts?
Does sediment need to be removed from behind the ditch check?

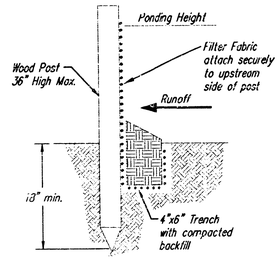

SILT FENCE BARRIERS

SILT FENCE BARRIERS

Material Specification:

Silt fence fabric should conform to the AASHTO M288 96 silt fence specification.
The posts used to support the silt fence fabric should be a hardwood material with the following minimum dimensions: 2" square (nominal) by 4' long.
Silt fence fabric should be attached to the wooden posts with staples, wire, zip ties, or nails.

Placement:

A slope barrier should be used at the toe of a slope when a ditch does not exist. The slope barrier should be placed on nearly level ground 5' to 10' away from the toe of a slope. The barrier is placed away from the toe of the slope to provide adequate storage for settling out sediment.
When practicable, silt fence slope barriers should be placed along contours to avoid a concentration of flow.
Silt fence slope barriers can also be placed along right-of-way fence lines to keep sediment from crossing onto adjacent property. When placed in this manner, the slope barrier will not likely follow contours.

Proper installation method:

Excavate a trench the length of the planned slope barrier that is 6" deep by 4" wide.
Make sure that the trench is excavated along a single contour. When practicable, slope barriers should be placed along contours to avoid a concentration of flow. Place the soil on the upslope side of the trench for later use.
Roll out a continuous length of silt fence fabric on the downslope side of the trench.
Place the edge of the fabric in the trench starting at the top upslope edge. Line all three sides of the trench with the fabric. Backfill over the fabric in the trench with the excavated soil and compact. After filling the trench, approximately 24" to 36" of silt-fence fabric should remain exposed.
Lay the exposed silt fence upslope of the trench to clear an area for driving in the posts.
Just downslope of the trench, drive posts into the ground to a depth of at least 18".
Place posts no more than 4' apart.
Attach the silt fence to the anchored post with staples, wire, zip ties, or nails.

List of common placement/installation mistakes to avoid:

When practicable, do not place silt fence slope barriers across contours. Slope barriers should be placed along contours to avoid a concentration of flow. When the flow concentrates, it overtops the barrier and the silt fence slope barrier quickly deteriorates.
Do not place silt-fence posts on the upslope side of the silt fence fabric. In this configuration, the force of the water is not restricted by the posts, but only by the staples (wire, zip ties, nails, etc.). The silt fence will rip and fail.
Do not place silt fence slope barriers in areas with shallow soils underlain by rock. If the barrier is not sufficiently anchored, it will wash out.
Silt fence slope barriers must be dug into the ground-silt fence at ground level does not work because water will flow underneath.

Inspection and Maintenance:

Silt fence slope barriers should be inspected every 7 days and within 24 hours of a rainfall of 1/2" or more. The following is a list of questions that should be addressed during each inspection:

Are there any points along the slope barrier where water is concentrating?
Does water flow under the slope barrier?
Do the silt fences sag excessively?
Has the silt fence torn or become detached from the posts?
Does sediment need to be removed from behind the slope barrier?

CITY OF WICHITA

SOIL EROSION BMP DETAILS

CHRISTOPHER M. CARRIER, P.E.
STORM WATER ENGINEER

PROJECT NUMBER	OCA NO.
468-83662	751351

DATE: MAY 2001

HARVEST RIDGE ADDITION

WICHITA, SEDGWICK COUNTY, KANSAS

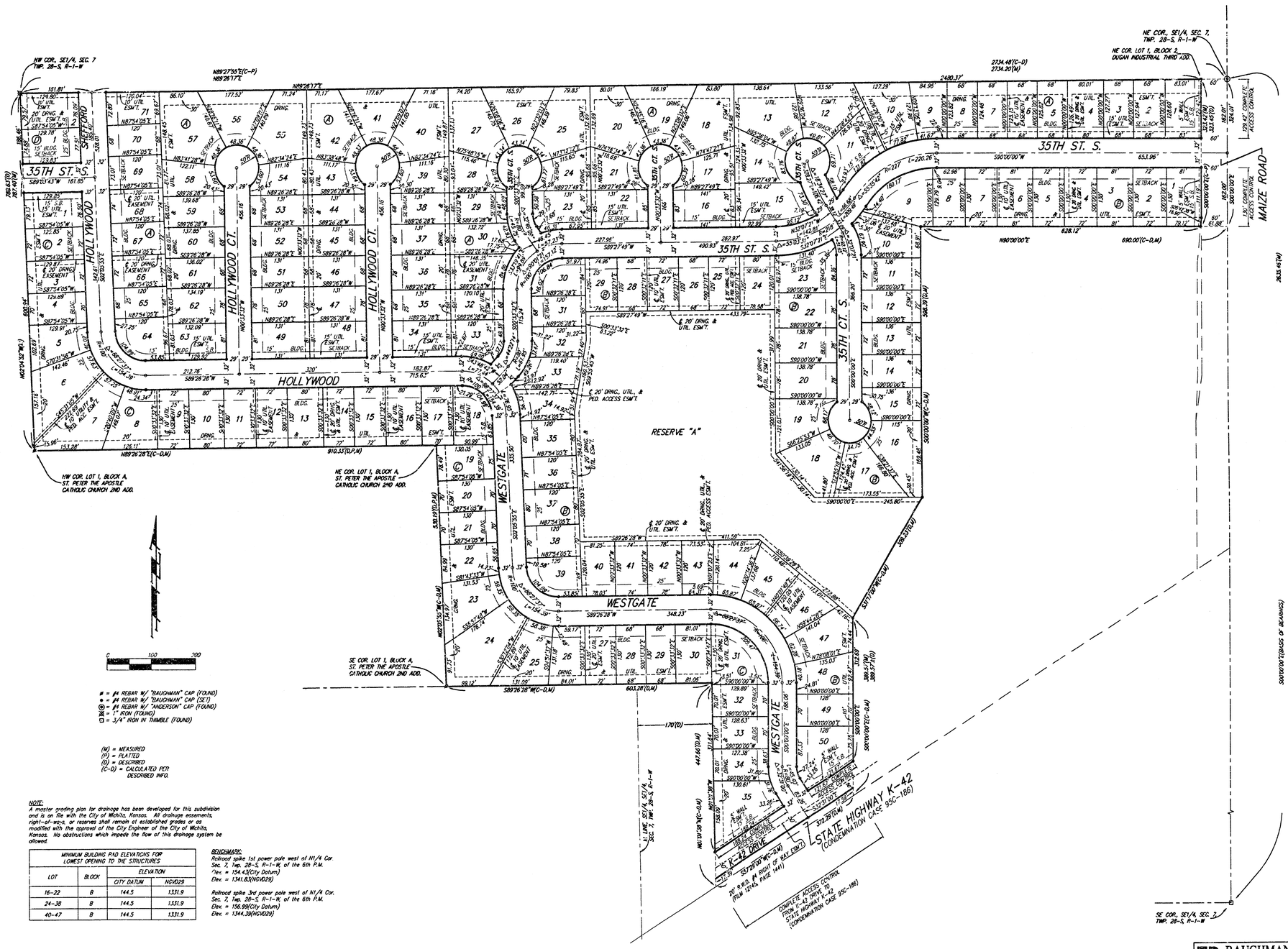

= #4 REBAR W/ "BAUGHMAN" CAP (FOUND)
● = #4 REBAR W/ "BAUGHMAN" CAP (SET)
◎ = #4 REBAR W/ "ANDERSON" CAP (FOUND)
⊗ = 1" IRON (FOUND)
□ = 3/4" IRON IN THIMBLE (FOUND)

(M) = MEASURED
(P) = PLATTED
(D) = DESCRIBED
(C-D) = CALCULATED PER DESCRIBED INFO.

NOTE:
A master grading plan for drainage has been developed for this subdivision and is on file with the City of Wichita, Kansas. All drainage easements, right-of-ways, or reserves shall remain at established grades or as modified with the approval of the City Engineer of the City of Wichita, Kansas. No obstructions which impede the flow of this drainage system be allowed.

MINIMUM BUILDING PAD ELEVATIONS FOR LOWEST OPENING TO THE STRUCTURES			
LOT	BLOCK	ELEVATION	
		CITY DATUM	NGVD29
16-22	B	144.5	1331.9
24-38	B	144.5	1331.9
40-47	B	144.5	1331.9

BENCHMARK:
Railroad spike 1st power pole west of N1/4 Cor. Sec. 7, Twp. 28-S, R-1-W, of the 6th P.M.
Elev. = 154.43(City Datum)
Elev. = 1341.83(NGVD29)

Railroad spike 3rd power pole west of N1/4 Cor. Sec. 7, Twp. 28-S, R-1-W, of the 6th P.M.
Elev. = 156.99(City Datum)
Elev. = 1344.39(NGVD29)

BAUGHMAN COMPANY P. A.
ENGINEERING, SURVEYING, & PLANNING
316-262-7271 • 315 ELLIS • WICHITA, KANSAS 67211

ONE-STEP FINAL PLAT

HARVEST RIDGE COMMERCIAL ADDITION

WICHITA, SEDGWICK COUNTY, KANSAS

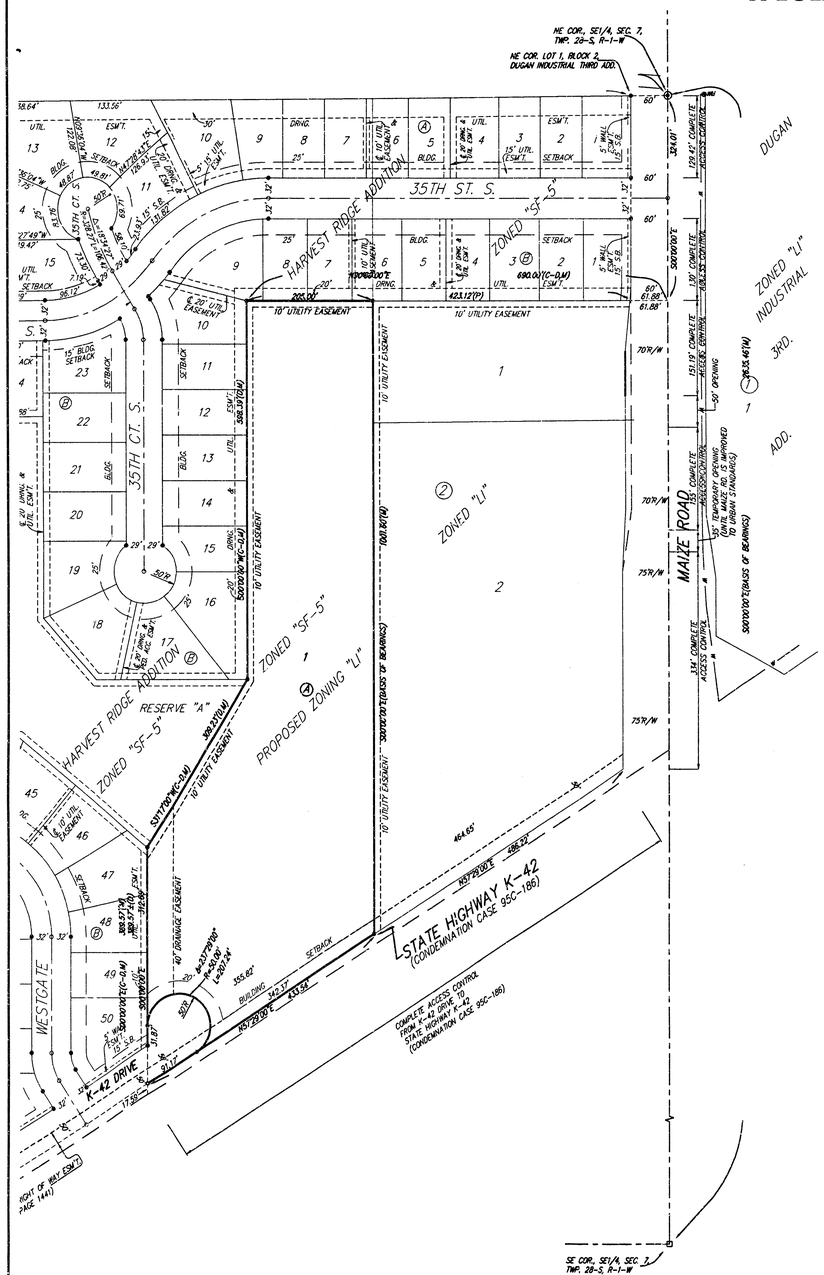

0 100 200

DATE OF PREPARATION: 13 APRIL 2004
DATE OF TOPOGRAPHY: 07 JULY 2003
CONTOUR INTERVALS = 1 FOOT

NOTE:
A drainage plan has been developed for this subdivision and is on file with the City of Wichita, Kansas. Drainage intent shall remain as depicted or as modified with the approval of the City Engineer of the City of Wichita, Kansas. No obstructions which impede the flow of this drainage plan shall be allowed.

MINIMUM BUILDING PAD ELEVATIONS FOR LOWEST OPENING TO THE STRUCTURES			
LOT	BLOCK	ELEVATION	
		CITY DATUM	NGVD29
1	A	144.5	1331.9

BENCHMARK:
Railroad spike 1st power pole west of N1/4 Cor. Sec. 7, Twp. 28-S, R-1-W, of the 6th P.M.
Elev. = 154.43(City Datum)
Elev. = 1341.83(NGVD29)

Railroad spike 3rd power pole west of N1/4 Cor. Sec. 7, Twp. 28-S, R-1-W, of the 6th P.M.
Elev. = 156.59(City Datum)
Elev. = 1344.39(NGVD29)

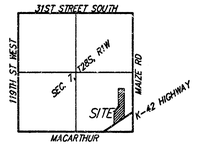

VICINITY MAP

State of Kansas)
Sedgwick County) SS

We, Baughman Company, P.A., Surveyors in aforesaid county and state do hereby certify that we have surveyed and platted "HARVEST RIDGE COMMERCIAL ADDITION", Wichita, Sedgwick County, Kansas and that the accompanying plat is a true and correct exhibit of the property surveyed, described as that part of the SE ¼ of Sec. 7, Twp. 28-S, R-1-W of the 6th P.M., Sedgwick County, Kansas described as follows: Commencing at the NW corner of Lot 1, Block 2, in said Dugan Industrial Third Addition; thence southerly along the west line of said Block 2, 319.47 feet for a point of beginning; thence continuing southerly along the west line of said Block 2, 1019.17 feet to the SW corner of Lot 2 in said Bock 2, said SW corner also being on the northerly right-of-way line of K-42 Highway; thence southwesterly along the northerly right-of-way line of said K-42 Highway, 433.57 feet; thence northerly parallel with the east line of said SE ¼, 389.57 feet; thence northeasterly with a deflection angle to the right of 31°17'00", 309.23 feet; thence northerly with a deflection angle to the left of 31°17'00" and parallel with the east line of said SE ¼, 598.39 feet; thence easterly perpendicular to the east line of said SE ¼, 205.02 feet to the point of beginning, all being subject to road rights-of-way of record.

Existing public easements and dedications being vacated by virtue of K.S.A. 12-512(b).

Baughman Company, P.A.

_____, Surveyor
Michael G. Conrey

Know all men by these presents that we, the undersigned, have caused the land in the surveyors certificate to be platted into a Lot, a Block, and a Street, to be known as "HARVEST RIDGE COMMERCIAL ADDITION", Wichita, Sedgwick County, Kansas. The utility easements are hereby granted as indicated for the construction and maintenance of all public utilities. The drainage easement is hereby granted as indicated for drainage purposes. The street is hereby dedicated to and for the use of the public. Access controls shall be as depicted on the face of the plat and are hereby granted to the City of Wichita, Kansas. The Minimum Building Pad Elevations for the lowest opening to the structures shall be as indicated on the face of the plat.

_____ _____
John E. Dugan Marilyn K. Dugan

John E. Dugan Family Partnership, L.P.,
a Kansas limited partnership

_____, Manager
John E. Dugan, Trustee of the
John E. Dugan Revocable Trust #1

State of Kansas)
Sedgwick County) SS

The foregoing instrument acknowledged before me, this_____day of_____, 2004, by John E. Dugan and Marilyn K. Dugan, husband and wife.

_____, Notary Public

My App't. Exp. _____

State of Kansas)
Sedgwick County) SS

The foregoing instrument acknowledged before me, this_____day of_____, 2004, by John E. Dugan, Trustee of the John E. Dugan Revocable Trust #1, as Manager of the John E. Dugan Family Partnership, L.P., a Kansas limited partnership, on behalf of the limited partnership.

_____, Notary Public

My App't. Exp._____

This plat of "HARVEST RIDGE COMMERCIAL ADDITION" Wichita, Sedgwick County, Kansas has been submitted to and approved by the Wichita-Sedgwick County Metropolitan Area Planning Commission, Wichita, Kansas.

Dated this ____ day of _____, 2004.
Wichita-Sedgwick County Metropolitan Area Planning Commission

_____, Chair
Ronald L. Marnell

_____, Secretary
John L. Schlegel

This plat approved and all dedications shown hereon accepted by the City Council of the City of Wichita, Kansas, this ____ day of _____, 2004.

_____, Mayor
Carlos Mayans

_____, City Clerk
Karen Schofield

Reviewed in accordance with K.S.A. 58-2005 on this_____day of _____, 2004.

_____
Tricia L. Robello, L.S. #1246
Deputy County Surveyor
Sedgwick County, Kansas

Entered on transfer record this_____day of _____, 2004.

_____, County Clerk
Don Brace

State of Kansas)
Sedgwick County) SS

This is to certify that this plat has been filed for record in the office of the Register of Deeds, this____day of_____, 2004 at____o'clock__M, and is duly recorded.

_____, Register of Deeds
Bill Meek

_____, Deputy
Linda Kizzire

BAUGHMAN COMPANY P. A.
ENGINEERING, SURVEYING, & PLANNING
WICHITA, KANSAS 67211

SHEET 1OF 1 OF 1

1-1-05-D-1-05