83827

STORM WATER SEWER NO. 608

TO SERVE

EVERGREEN AND NEWMARKET SQUARE ADDITIONS

OCA NO. 751373

CITY OF WICHITA PROJECT NO. 468-83827

CITY OF WICHITA, KANSAS

JAMES L. ARMOUR, P.E. - ACTING CITY ENGINEER

INDEX OF SHEETS

1 TITLE SHEET
2. KEY MAP AND GENERAL NOTES
3. PLAT (NEWMARKET SQUARE)
4-5. PLAT (EVERGREEN)
6. PLAN AND PROFILE
7. PLAN AND PROFILE
8. MISCELLANEOUS DETAIL SHEET
9. EROSION CONTROL PLAN
10-13. EROSION CONTROL DETAILS

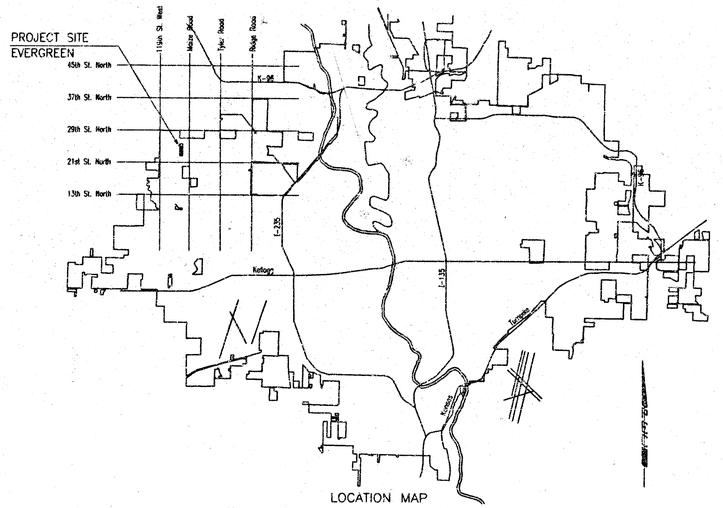

LOCATION MAP

MICHAEL D. KELLEY LICENSED 13944 7/14/04 KANSAS PROFESSIONAL ENGINEER

CONSTRUCTION SCHEDULE/SEQUENCE

STORM WATER SEWER (468-83827)
THE CONTRACTOR SHALL COMPLETE THE STORM WATER SEWER CONSTRUCTION BY OCTOBER 8, 2004.

JULY 2004

PLANS PREPARED BY

PROFESSIONAL ENGINEERING CONSULTANTS, P.A.

ENGINEERS

WICHITA, KANSAS

DSNR: MDK OPER: JLV SCALE: 1=1.00
Q:\2004\04275\SWS Force Main\SNSTITLE 07-14-2004 10:38:07 am

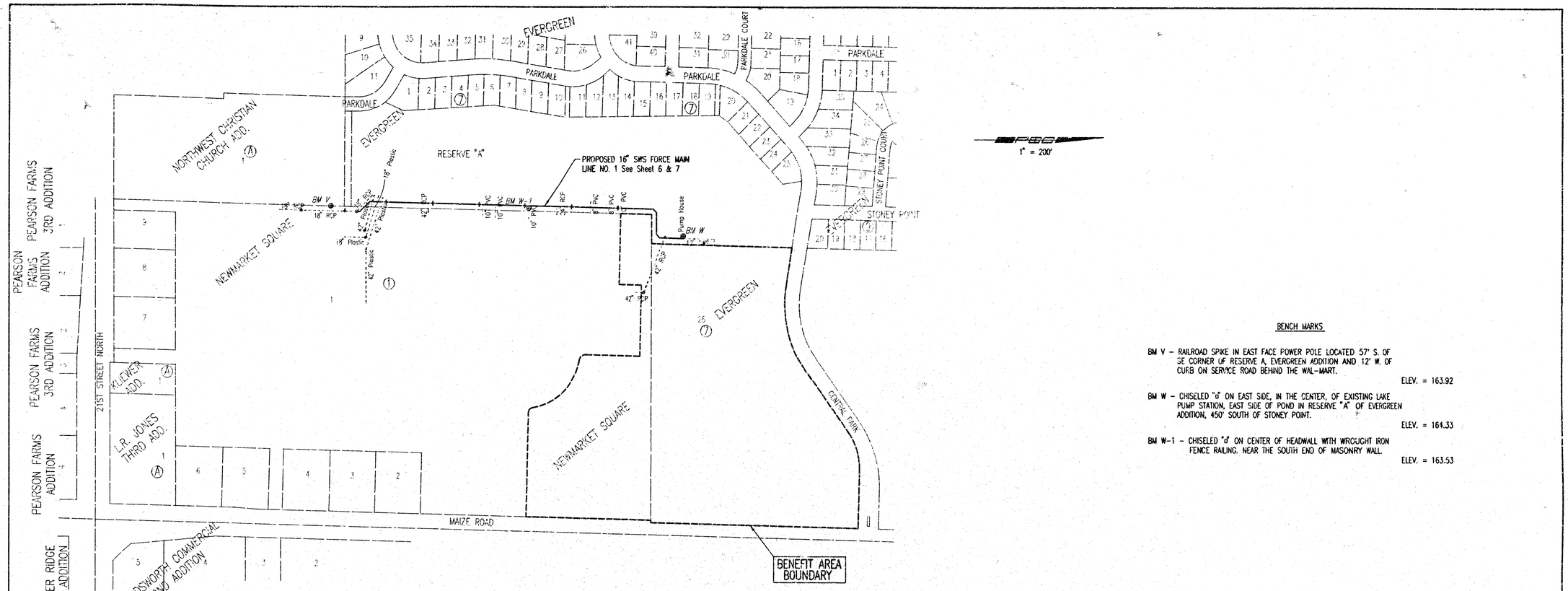

BENCH MARKS

BM V – RAILROAD SPIKE IN EAST FACE POWER POLE LOCATED 57' S. OF SE CORNER OF RESERVE A, EVERGREEN ADDITION AND 12' W. OF CURB ON SERVICE ROAD BEHIND THE WAL-MART.
ELEV. = 163.92

BM W – CHISELED "d" ON EAST SIDE, IN THE CENTER, OF EXISTING LAKE PUMP STATION, EAST SIDE OF POND IN RESERVE "A" OF EVERGREEN ADDITION, 450' SOUTH OF STONEY POINT.
ELEV. = 164.33

BM W-1 – CHISELED "d" ON CENTER OF HEADWALL WITH WROUGHT IRON FENCE RAILING. NEAR THE SOUTH END OF MASONRY WALL.
ELEV. = 163.53

GENERAL NOTES

1. ALL ELEVATIONS SHOWN ARE CITY OF WICHITA DATUM. (U.S.G.S. – 1187.4 = CITY DATUM)
2. CONTRACTOR WILL BE REQUIRED TO PROVIDE A MINIMUM ADVANCE NOTICE OF FORTY-EIGHT (48) HOURS TO UTILITY COMPANIES PRIOR TO STARTING ANY EXCAVATION AS FOLLOWS:

KANSAS ONE-CALL	687-2470

THE CONTRACTOR MUST NOTIFY THE FOLLOWING IN CASE OF AN EMERGENCY:

COX COMMUNICATIONS	262-0661
KANSAS GAS SERVICE	832-3169
WESTAR ENERGY	383-8600
AQUILA NETWORK	1(800)-527-0357
SBC	1(800)-870-8390
CITY OF WICHITA WATER DEPARTMENT	262-6000
CITY OF WICHITA SEWER MAINTENANCE	262-6000

3. THE FORCE MAIN SHALL BE CONSTRUCTED ON THE ALIGNMENT SHOWN BY THE PLANS. TREES AND SHRUBS IN PUBLIC RIGHT-OF-WAY WHICH ARE IN DIRECT CONFLICT WITH PROPOSED NEW CONSTRUCTION SHALL BE REMOVED BY THE CONTRACTOR WITH THE ENGINEER'S APPROVAL. TREES AND SHRUBS WHICH ARE NOT IN DIRECT CONFLICT WITH PROPOSED NEW CONSTRUCTION SHALL BE SAVED AND PROTECTED FROM DAMAGE. THE COST FOR ANY NECESSARY TREE TRIMMING, CLEARING AND/OR GRUBBING SHALL BE SUBSIDIARY TO SITE CLEARING.
4. THE CONTRACTOR SHALL NOT START WORK ON THE PROJECT UNTIL THE PROJECT INSPECTOR IS ASSIGNED TO THE PROJECT AND IS PRESENT ON THE SITE. ANY WORK DONE WITHOUT INSPECTION WILL BE REQUIRED TO BE UNCOVERED FOR INSPECTION.
5. THE CONTRACTOR SHALL GIVE ALL PROPERTY OWNERS AND/OR TENANTS OF DEVELOPED PROPERTY DIRECTLY ABUTTING THE CONSTRUCTION OF THIS PROJECT A MINIMUM OF TEN (10) DAYS ADVANCE NOTICE PRIOR TO START OF CONSTRUCTION.
6. THE CONTRACTOR SHALL BE RESPONSIBLE FOR PRESERVING PROPERTY IRONS. THE CONTRACTOR SHALL BE REQUIRED TO RE-ESTABLISH ANY PROPERTY IRONS WHICH ARE DAMAGED OR DESTROYED BY HIS CONSTRUCTION OPERATIONS. SUCH IRONS SHALL BE RE-ESTABLISHED BY A LICENSED LAND SURVEYOR IN ACCORDANCE WITH STATE LAWS. ALL COSTS FOR THIS WORK SHALL BE SUBSIDIARY TO SITE RESTORATION.
7. THE CONTRACTOR SHALL RESTORE ALL DITCHES, SWALES, ROAD SHOULDERS, ENTRANCES, AND BANK LINES TO THEIR ORIGINAL SLOPES AND GRADES EXCEPT AS SHOWN OTHERWISE.
8. INTERURBAN TRAFFIC GENERATED OUTSIDE THE PROJECT AREA AND LOCAL BUSINESS OR RESIDENTIAL TRAFFIC GENERATED WITHIN THE PROJECT AREA ARE TO BE CARRIED THROUGH CONSTRUCTION AS FURTHER PROMULGATED BY PROJECT SPECIAL PROVISIONS. THE CONTRACTOR SHALL UTILIZE BARRICADES, SIGNS, GUARDS, AND FLAGMEN IN ACCORDANCE WITH THE MANUAL ON UNIFORM TRAFFIC CONTROL DEVICES.
9. RUBBLE FROM THE REMOVAL OF MISCELLANEOUS STRUCTURES INCLUDING ANY TREES REMOVED AND TREE TRIMMINGS SHALL BE DISPOSED OF ON SITES PROVIDED BY THE CONTRACTOR. THESE SITES SHALL ALSO BE APPROVED OF BY THE ENGINEER AS TO SUITABILITY, APPEARANCE, AND SITE LOCATION. LOCATIONS THAT, IN THE OPINION OF THE ENGINEER, LEAVE AN UNSIGHTLY APPEARANCE WILL NOT BE APPROVED. ALL DISPOSAL SITES MUST BE APPROVED BY THE KANSAS DEPARTMENT OF HEALTH AND ENVIRONMENT. MATERIAL EITHER STOCKPILED OR DISPOSED OF IN A FLOOD PLAIN WILL REQUIRE A KANSAS STATE BOARD OF AGRICULTURE PERMIT. ANY MATERIAL DUMPED IN WATERS OF THE UNITED STATES OR WETLANDS IS SUBJECT TO U.S. CORPS OF ENGINEERS PERMITTING REGULATIONS. ANY MATERIAL BURIED OR STOCKPILED BEYOND APPROVED CONSTRUCTION LIMITS MAY REQUIRE ARCHAEOLOGICAL INVESTIGATIONS UNLESS BURIED IN A PREVIOUSLY APPROVED DISPOSAL LOCATION.
10. ALL LAWN/TURF AREAS DISTURBED BY CONSTRUCTION OF THE PROPOSED IMPROVEMENTS SHALL BE RESTORED WITH THE SAME GRASS/SOD AS EXISTING. RESTORATION OF DISTURBED AREAS SHALL INCLUDE, BUT NOT BE LIMITED TO, TOP SOIL PREPARATION, SEEDING, MULCH, AND/OR RESEEDING. ALL SEEDING/SODDING WORK SHALL BE IN ACCORDANCE WITH THE CITY OF WICHITA STANDARD SPECIFICATIONS AND THE CITY OF WICHITA ADMINISTRATIVE REGULATION NO. AR78 WHICH GOVERNS CLEANUP AND RESTORATION OR REPLACEMENT FOLLOWING CONSTRUCTION. ALL COSTS FOR THIS WORK SHALL BE SUBSIDIARY TO THE LUMP SUM PRICE BID FOR "SITE RESTORATION".
11. EACH BIDDER SHALL VISIT THE SITE OF THE PROJECT BEFORE SUBMITTING THE PROPOSAL FOR THIS WORK SO THAT HE WILL BE FULLY INFORMED OF THE EXISTING FIELD CONDITIONS AND THE OBSTACLES WHICH MIGHT BE ENCOUNTERED. UPON AWARD OF THE CONTRACT THE CONTRACTOR WILL NOT BE GRANTED ANY ADDITIONAL COMPENSATION WITH REGARDS TO TIME AND MONEY FOR CONDITIONS THAT MAY HAVE BEEN EVALUATED DURING ANY INSPECTION OF THE SITE.
12. THE CONTRACTOR SHALL SEED ALL AREAS DISTURBED BY CONSTRUCTION ACTIVITIES WITH TEMPORARY RYE GRASS. RYE GRASS SEED SHALL BE PLANTED AT A MINIMUM RATE OF SIX (6) POUNDS PER ONE THOUSAND (1,000) SQUARE FEET. THIS TEMPORARY SEEDING MAY BE OMITTED ONLY IF OTHER SEEDING IS REQUIRED IN ACCORDANCE WITH GENERAL NOTE NO. 10 ABOVE. TEMPORARY SEEDING OR PERMANENT SEEDING/SODDING SHALL BE APPLIED WITHIN 14 DAYS AFTER THE AREA HAS BEEN DISTURBED.
13. THE CONTRACTOR SHALL INSTALL AND/OR MAINTAIN EROSION CONTROL METHODS AS SPECIFIED ON SHEET 9. THE FOLLOWING QUANTITIES ARE ESTIMATED, AND SHOULD BE CONSIDERED THE MINIMUM EFFORT REQUIRED. THE WATERLINE CONTRACTOR SHALL BE RESPONSIBLE FOR MAINTAINING THE EROSION CONTROL SHOWN THROUGH THE COMPLETION OF THIS PROJECT. INSTALLATION OF THESE BMP'S DOES NOT RELIEVE THE CONTRACTOR OF THE RESPONSIBILITY OF ABATING SOIL EROSION.

SILT FENCE BARRIER	1552 L.F.
CONSTRUCTION ENTRANCE	1 EACH

14. UNDERGROUND UTILITY SERVICE LINES AND OVERHEAD UTILITY POLE LINES ARE TO BE ADJUSTED AS NECESSARY BY OTHERS PRIOR TO CONSTRUCTION UNLESS THE PLANS SPECIFICALLY CALL FOR THEIR ADJUSTMENT BY THE CONTRACTOR. EXISTING UTILITIES AND THEIR LOCATION, AS SHOWN ON THE PLANS, REPRESENT THE BEST INFORMATION OBTAINABLE FOR DESIGN. LOCATION INFORMATION HAS BEEN OBTAINED FROM THE VARIOUS UTILITY COMPANIES AND IS EITHER FROM COMPANY RECORD DRAWINGS OR COMPANY PROVIDED FIELD LOCATIONS. THE CONTRACTOR WILL BE REQUIRED TO WORK AROUND EXISTING UTILITIES WITHIN THE RIGHT-OF-WAY WHICH DO NOT CONFLICT WITH PROPOSED CONSTRUCTION.
15. CONTRACTOR SHALL PROVIDE A MINIMUM FORTY-EIGHT (48) HOUR ADVANCE NOTICE (EXCLUDING WEEKENDS AND HOLIDAYS) PRIOR TO BEGINNING ANY EXCAVATION, TO KANSAS ONE-CALL SYSTEM, A UTILITY LOCATION SERVICE, AT (316) 687-2470 TO REQUEST THE FOLLOWING UTILITY COMPANIES TO LOCATE ALL EXISTING LINES WITHIN THE PROJECT AREA: AQUILA NETWORK, WESTAR ENERGY, SBC, COX COMMUNICATIONS, CITY OF WICHITA SEWER MAINTENANCE AND CITY OF WICHITA WATER DEPARTMENT.
16. CONTRACTOR SHALL BE RESPONSIBLE FOR UTILITY RELOCATIONS NECESSITATED BY CONSTRUCTION AND SHALL COORDINATE THIS EFFORT WITH THE VARIOUS UTILITY COMPANIES AFFECTED.
17. THE CONTRACTOR SHALL ABIDE BY THE PROVISIONS OF THE STORM WATER POLLUTION PREVENTION PLAN DURING CONSTRUCTION AND SHALL EXECUTE A CONTRACTOR CERTIFICATION FOR PRIOR TO CONSTRUCTION. THE CONTRACTOR SHALL BE RESPONSIBLE FOR MAINTAINING EROSION CONTROL MEASURES UNTIL A WRITTEN RELEASE TRANSFER OF OF RESPONSIBILITY IS ISSUED BY THE OWNER.
18. ACCESS TO THE SITE SHALL BE RESTRICTED TO ONE OR BOTH OF THE EXISTING ENTRANCES OFF MAIZE ROAD. A CONSTRUCTION ENTRANCE SHALL BE CONSTRUCTED PRIOR TO USE OF EITHER ENTRANCE.
19. THE CONTRACTOR SHALL COORDINATE HIS WORK WITH OTHER CONSTRUCTION ACTIVITY ON SITE SUCH THAT POSITIVE DRAINAGE ACROSS THE SITE IS MAINTAINED AT ALL TIMES AND CONCURRENT OPERATIONS ARE ACHIEVED. THIS MAY REQUIRE THE SUSPENSION OF EARTHWORK OPERATIONS DURING OTHER CONSTRUCTION.
20. THE WATER DEPARTMENT SHALL FIELD LOCATE WATER VALVES ONE TIME DURING CONSTRUCTION WHEN REQUESTED BY THE CONTRACTOR. IT SHALL BE THE CONTRACTOR'S RESPONSIBILITY TO PRESERVE SUCH FIELD LOCATIONS DURING THE CONSTRUCTION PROCESS. WATER VALVES, WATER VALVE BOXES OR FIRE HYDRANTS DAMAGED DURING CONSTRUCTION SHALL BE REPAIRED BY THE CONTRACTOR AT HIS OWN EXPENSE.
21. ALL IRRIGATION, LANDSCAPING, AND FENCING DISTURBED DURING CONSTRUCTION SHALL BE REMOVED AND RESET/REPLACED IN KIND. THE CONTRACTOR SHALL PROVIDE A MINIMUM ADVANCE NOTICE OF FORTY-EIGHT (48) HOURS TO THE AFFECTED PROPERTY OWNERS PRIOR TO BEGINNING CONSTRUCTION. THIS WORK SHALL BE CONSIDERED SUBSIDIARY TO "SITE CLEARING AND RESTORATION".
22. PROPERTIES WITHIN THE PROJECT LIMITS MAY HAVE UNDERGROUND SPRINKLER SYSTEMS IN PUBLIC RIGHT-OF-WAY WHICH CONFLICT WITH NEW CONSTRUCTION. CONTRACTOR WILL BE REQUIRED TO REMOVE SUCH IMPROVEMENTS SHOULD THEY NOT BE REMOVED BY THEIR OWNER AT THE TIME OF CONSTRUCTION OF THE PROJECT. THE CONTRACTOR WILL BE REQUIRED TO SALVAGE ALL SPRINKLER HEADS AND/OR VALVES AND GIVE SUCH MATERIAL TO THEIR OWNER. PORTIONS OF UNDERGROUND SPRINKLER SYSTEMS NOT IN CONFLICT WITH NEW CONSTRUCTION SHALL BE PROTECTED FROM DAMAGE AND SHALL REMAIN IN PLACE. ALL WORK IN CONNECTION WITH UNDERGROUND SPRINKLER SYSTEMS SHALL BE CONSIDERED AS SUBSIDIARY TO PRICE BID FOR PIPE IN PLACE.
23. ACCEPTABLE PIPE MATERIALS FOR THIS PROJECT WILL INCLUDE AWWA C-905 DR-25 OR PRESSURE CLASS 200 DUCTILE IRON PIPE WITH POLYETHYLENE TUBE ENCASEMENT IN ACCORDANCE WITH AWWA C-105, UNLESS OTHERWISE SPECIFIED. PIPE MATERIAL REQUIREMENTS AND TESTING OF THE COMPLETED FORCE MAIN SHALL BE IN ACCORDANCE WITH THE STANDARD SPECIFICATIONS FOR WATERLINE CONSTRUCTION IN THE CITY OF WICHITA.
24. ALL CONSTRUCTION AND MATERIALS TO COMPLY WITH CITY OF WICHITA SPECIFICATIONS AND STANDARDS.
25. THE CONTRACTOR SHALL LIMIT THE EXTENT OF TRENCH TO REMAIN OPEN OVERNIGHT AND WEEKENDS TO LESS THAN 50 FEET.
26. SEQUENCE OF PUMP OPERATIONS:
CONTRACTOR SHALL PROVIDE A NEW FLOAT CONTROL SYSTEM FOR THE EXISTING PUMP TO ACHIEVE THE FOLLOWING OPERATIONS:

ELEV.= 158.50	LOW-WATER PUMP OFF
ELEV.= 159.00	LOW-WATER PUMP ON
ELEV.= 162.00	HIGH-WATER PUMP ON/OFF

UNDER THESE OPERATIONS AND LOW-WATER CONDITIONS, THE PUMP WILL BE TRIGGERED TO TURN ON AT ELEV.= 159.00 AND CONTINUE TO REMOVE WATER FROM THE RESERVOIR UNTIL STATIC WATER ELEVATION IS ATTAINED AT ELEV.= 158.50. IN THE EVENT OF HIGH-WATER CONDITIONS (I.E. THE INFLOW EXCEEDS THE PUMP CAPACITY), THE PUMP WILL CONTINUE TO RUN UNTIL THE RESERVOIR REACHES AN ELEVATION OF 162.00 AT WHICH THE PUMP WILL BE SWITCHED OFF AND OVERFLOW WATER IS CARRIED SOLELY BY THE GRAVITY OUTFALL SYSTEM. THE GRAVITY OUTFALL SYSTEM CONTINUES TO CARRY THE SUM OF THE OVERFLOW FROM THE RESERVOIR UNTIL AN ELEVATION OF 162.00 IS RE-ESTABLISHED; AT WHICH TIME, THE PUMP WILL AGAIN BE ACTIVATED.

DSNR: MDK OPER: JLM SCALE: 1=200.00
Q:\2004\04275\SWS Force Main\keymap.DWG 07-14-2004 03:45:30 pm

MICHAEL D. KEPLER LICENSED KANSAS 13944 PROFESSIONAL ENGINEER 7/14/04

No.	Revision	By	Date

EVERGREEN AND NEWMARKET SQUARE ADDITIONS
STORM WATER SEWER NO. 608

KEY MAP AND GENERAL NOTES

JAMES L. ARMOUR, P.E.- ACTING CITY ENGINEER
CITY OF WICHITA PROJECT NO. 468-83827

Professional Engineering Consultants, P.A.
303 S. TOPEKA • WICHITA, KANSAS 67202
316-262-2691 • FAX 316-262-3003

Designed by	MDK	Job No.	35-04275-042
Drawn by	TLB	Date	May 2004

Sht. 2 of 13

NEWMARKET SQUARE

AN ADDITION TO WICHITA, SEDGWICK COUNTY, KANSAS

SCALE: 1"=100'

● = IRON FOUND

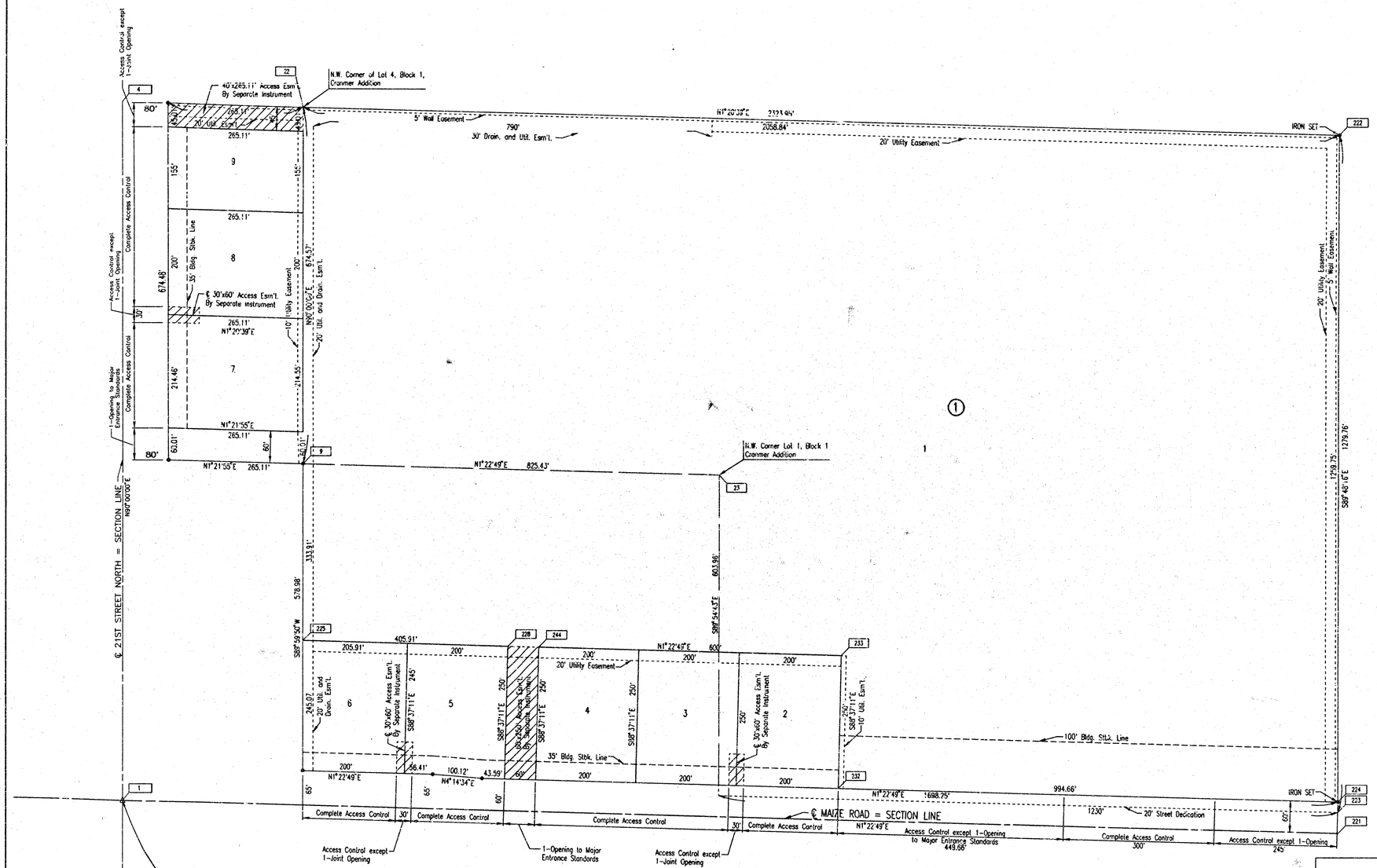

COORDINATE LIST		
POINT	NORTH	EAST
1	5,000.0000	5,000.0000
4	5,000.0001	3,681.6447
9	5,345.0325	4,364.3163
22	5,345.0325	3,689.7410
23	6,170.2203	4,384.1985
221	7,398.7988	5,057.7972
222	7,403.3026	3,738.0388
223	7,398.9353	5,017.7889
224	7,399.0035	4,997.7847
225	5,345.0482	4,698.2237
228	5,750.8451	4,708.0011
232	6,404.6318	4,973.8261
233	6,410.6536	4,723.8986
244	5,810.8277	4,709.4463

1 = COORDINATE POINT NO.

DSNR: PEC OPER: JLM SCALE: 1=100.00
Q:\2004\04275\SWS Force Main\NewMarketPlat 07-14-2004 09:32:03 am

No.	Revison	By	Date

EVERGREEN AND NEWMARKET SQUARE ADDITIONS
STORM WATER SEWER NO. 608

PLAT

(NEWMARKET SQUARE)

JAMES L. ARMOUR, P.E.- ACTING CITY ENGINEER
CITY OF WICHITA PROJECT NO. 468-83827

Professional Engineering Consultants, P.A.
303 S. TOPEKA - WICHITA, KANSAS 67202
316-262-2691 • FAX 316-262-3003

Designed by	SANCHEZ	Job No.	35-04275-042
Drawn by	DEP	Date	May 2004

Sht. 3 of 13

EVERGREEN

AN ADDITION TO WICHITA, SEDGWICK COUNTY, KANSAS

COORDINATE LIST		
POINT	NORTH	EAST
100	7,403.3020	3,738.0388
101	6,071.1795	3,706.7802
102	6,072.4203	3,314.7822
103	6,137.8021	3,314.9891
104	6,245.6703	3,280.1526
105	6,329.6488	3,312.6943
106	6,390.5482	3,309.1926
107	6,460.6599	3,305.1612
108	6,530.7716	3,301.1298
109	6,600.8833	3,297.0985
110	6,670.9950	3,293.0671
111	6,741.0049	3,293.4448
112	6,810.7673	3,304.5445
113	6,880.5298	3,315.6442
114	6,950.2922	3,326.7439
115	7,022.9076	3,338.2975
116	7,042.9140	3,338.1094
117	7,112.9500	3,337.4508
118	7,182.9860	3,336.7922
119	7,253.0220	3,336.1336
120	7,323.0580	3,335.4750
121	7,393.0940	3,334.8165
122	7,463.1299	3,334.1579
[illegible]	7,533.1659	3,333.4993
[illegible]	7,603.2019	3,332.8407
125	7,673.2379	3,332.1821
126	7,693.2482	3,331.9940
127	7,727.9233	3,356.7979
128	7,775.8221	3,407.8441
129	7,871.6196	3,509.9364
130	7,919.5183	3,560.9825
131	7,967.4171	3,612.0287
132	8,050.4278	3,600.0991
133	8,047.8090	3,634.7381
134	8,008.4456	3,872.3019
135	7,402.8946	3,857.4232

(100) = COORDINATE POINT NO.

Found 1/2" I.P. 0.18' West of Corner

N.W. Corner, S.E. 1/4 Sec. 6, T27S, R1W of the 6th P.M. Found 3/4" Iron Pipe

N.W. Corner, S. 1/2, N.E. 1/4 Sec. 6, T27S, R1W of the 6th P.M. Found 1/2" Rebar

RESERVE "A"

N.W. Corner Newmarket Square Add. Found 3/4" I.P.

SCALE: 1" = 100'

● = IRON SET

DSNR: PEC OPER: JLM SCALE: 1=100.00
Q:\2004\04275\SWS Force Main\Evergreen\Plat1 07-14-2004 08:39:41 am

No.	Revision	By	Date

EVERGREEN AND NEWMARKET SQUARE ADDITIONS
STORM WATER SEWER NO. 608

PLAT

(EVERGREEN)

JAMES L. ARMOUR, P.E. – ACTING CITY ENGINEER
CITY OF WICHITA PROJECT NO. 468-83827

Professional Engineering Consultants, P.A.
303 S. TOPEKA • WICHITA, KANSAS 67202
316-262-2691 • FAX 316-262-3003

Designed by	SANCHEZ	Job No.	35-04275-042
Drawn by	DEP	Date	May 2004

SHT 4 of 13

EVERGREEN

AN ADDITION TO WICHITA, SEDGWICK COUNTY, KANSAS

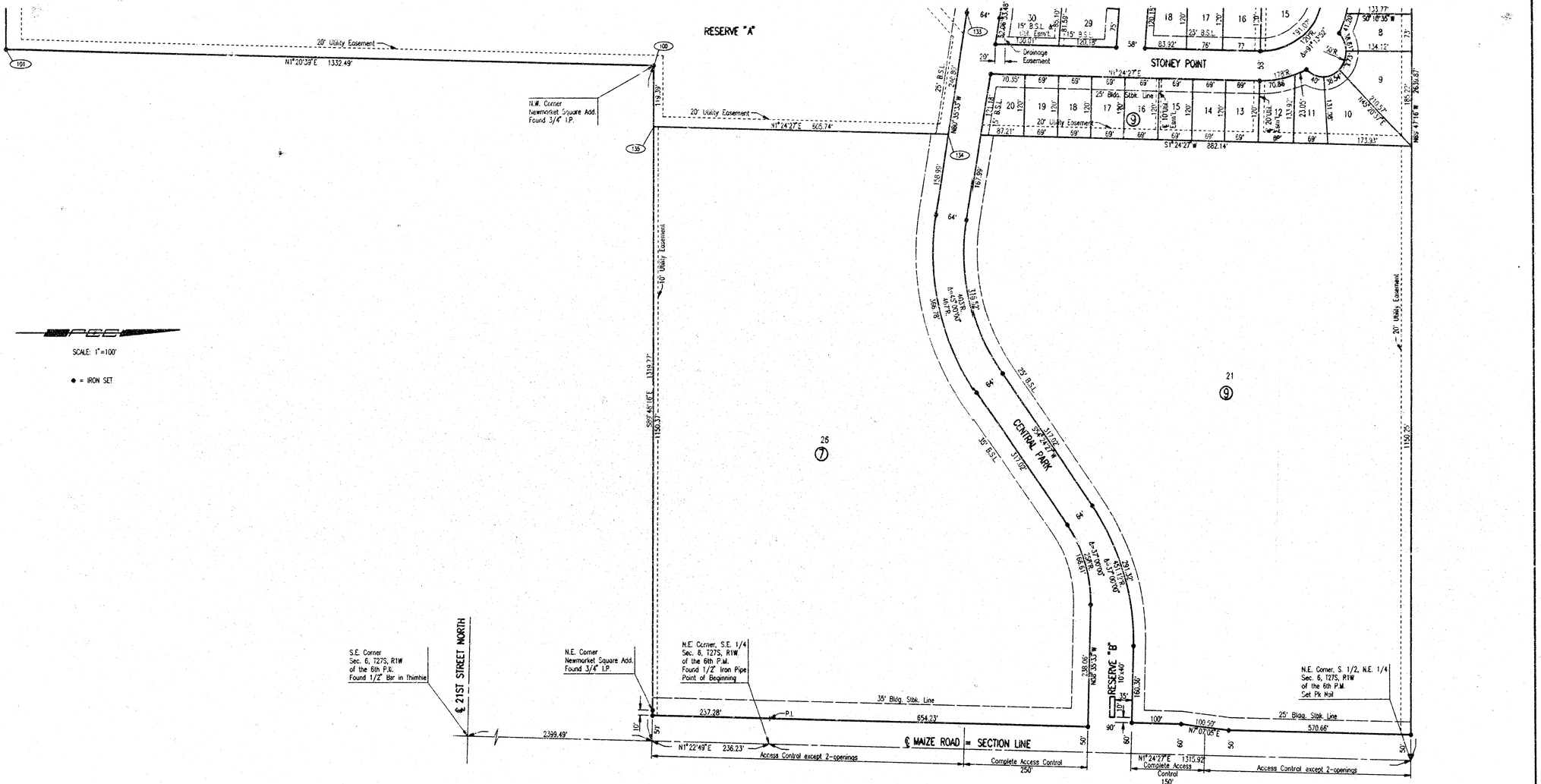

SCALE: 1"=100'

● = IRON SET

DSNR: PEC OPER: JLM SCALE: 1"=100.00
Q:\2004\04275\SWS Force Main\EvergreenPlat2 07-14-2004 08:37:12 am

No.	Revision	By	Date

EVERGREEN AND NEWMARKET SQUARE ADDITIONS
STORM WATER SEWER NO. 608

PLAT
(EVERGREEN)

JAMES L. ARMOUR, P.E. – ACTING CITY ENGINEER
CITY OF WICHITA PROJECT NO. 468-83827

Professional Engineering Consultants, P.A.
303 S. TOPEKA • WICHITA, KANSAS 67202
316-262-2691 • FAX 316-262-3003

Designed by	SANCHEZ	Job No.	35-04275-042
Drawn by	DEP	Date	May 2004

Sht. 5 of 13

N-6,125.5621, E-3,728.2061
FM 1, Sta. 10+00.00
Existing SWS MH
See Connection Detail, sheet no. 8

N-6,140.5580, E-3,728.5580
FM 1, Sta. 10+15.00
1- 16" CI CL MJ 45° Bend
Defl.= 45° 00' 00"

CAUTION!!!
4" Gas Line (Aquila Network)*
Buried Electric (Westar Energy)
Buried Telephone (SBC)
Buried CATV
(Cox Communications)

N-6,183.6793, E-3,687.4139
FM 1, Sta. 10+74.60
1- 16" CI CL MJ 45° Bend
Defl.= 45° 00' 00"

Remove and reset 42" Plastic SWS as required.

Remove and reset 18" Plastic SWS as required.

Remove and reset 42" Plastic SWS as required.

Remove and reset 42" RCP as required.

Remove and reset 10" PVC as required.

N-6,888.8842, E-3,703.9615
FM 1, Sta. 17+80.00
Match Point

SCALE:
PLAN: LAT. & LONG. 0 40 80
PROFILE: HORIZ. SAME AS ABOVE
VERT.

NORTHWEST CHRISTIAN CHURCH ADD.

EVERGREEN

RESERVE "A"

NEWMARKET SQUARE

Pond Water Surf. El.= 159.03 4-30-04

Edge of Water

Barbed wire fence

Squalings

Guardrails

Asphalt

Conc. Sidewalk

Masonry Wall

Masonry Fence

Conc. Gate

Gas Service

Mheelchair Ramp

Domestic Service

Asphalt-Pkg. Lot

Exist. 6" SS F.M.

18" RCP

21" PVC SS

SS (rec.)

SWS

16" Plastic

20' Utility Easement

5' Wall Easement

10' Sanitary Sewer Esmt.

20' Sanitary Sewer Esm't.

Sanitary Sewer Esmt.

Install 15.00 L.F. 16" Force Main.

Remove and replace 26 L.F. Asphalt Pavement in kind.

Remove and replace 6 L.F. Concrete sidewalk in kind.

Install 59.60 L.F. 16" Force Main.

Remove and replace 40 L.F. Concrete Pavement in kind.

Install 745.40 L.F. 16" Force Main.

Remove and reset concrete headwall as required.

* PRIOR TO BEGINNING CONSTRUCTION, THE CONTRACTOR SHALL EXCAVATE THE EXISTING 4" GAS LINE AT STATION 10+22 TO VERIFY PIPE SIZE, TYPE, FITTINGS, AND HORIZONTAL AND VERTICAL LOCATION. THE CONTRACTOR SHALL REPORT HIS FINDINGS TO THE ENGINEER SO THAT ANY NECESSARY PLAN MODIFICATIONS MAY BE MADE. ANY ADDITIONAL LABOR OR MATERIALS NECESSARY TO COMPLETE THE FORCE MAIN SHALL BE CONSIDERED SUBSIDIARY TO THE PROJECT.

Unless noted otherwise, elevations shown are top of pipe

X- Denotes Storm Sewer to be abandoned in place or trees to be removed.

SWS FORCE MAIN NO. 1

Existing SWS MH
Top Elev.= 163.92
42" Bend
4" Gas Line (Aquila)
Buried Telephone (SBC)
Buried Electric (Westar Energy)
Buried CATV (Cox Communications)
42" Plastic SWS
El.= 157.83
18" Plastic SWS
El.= 158.16
42" Plastic SWS
El.= 157.49
42" RCP SWS
El.= 159.41
10" PVC SWS
El.= 160.06
Match Point

℄ In = 161.20 from 18" RCP SWS (NW)

Existing Ground

Top of Proposed 16" Force Main

| | | |

N-6,888.8842, E-3,703.9615
FM 1, Sta. 17+80.00
Match Point

Remove and reset 24" RCP as required.

Remove and reset 8" PVC as required.

Remove and reset 10" PVC as required.

N-7,411.3769, E-3,716.2218
FM 1, Sta. 23+02.64
1- 16" CI CL MJ 45° Bend
Defl.= 44° 25' 32"

N-7,425.3278, E-3,730.5527
FM 1, Sta. 23+22.64
1- 16" CI CL MJ 45° Bend
Defl.= 44° 25' 33"

N-7,425.0261, E-3,818.9630
FM 1, Sta. 24+11.05
1- 16" CI CL MJ 45° Bend
Defl.= 44° 23' 39"

N-7,438.9690, E-3,833.3016
FM 1, Sta. 24+31.05
1- 16" CI CL MJ 45° Bend
Defl.= 44° 23' 38"

N-7,523.3361, E-3,835.3745
FM 1, Sta. 25+15.44
Check Valve Vault
See detail, sheet no. 8

N-7,538.4982, E-3,835.7471
FM 1, Sta. 25+30.61
Existing 12" SWS Force Main*
Remove existing 12" 90° Bend.
Install 1- 16" x 12" CI CL MJ x PE Reducer
and 1- 16" CI CL MJ 90° Bend on
existing 12" SWS Force Main.
All fittings, adaptors, and other
incidentals necessary to perform this
tie-in should be considered subsidiary
to the price bid for pipe.
Install 1- 12" CI MJ Cap on south end of pipe
to be abandoned in place.

CAUTION !!!
42" RCP SWS

SCALE:
PLAN: LAT. & LONG. 0 40 80
PROFILE: HORIZ. SAME AS ABOVE
VERT.

EVERGREEN

RESERVE "A"

NEWMARKET SQUARE

EVERGREEN

Remove and replace 36 L.F. Concrete sidewalk in kind.

Remove and reset/replace Existing Rip-rap in kind.

Remove and replace 186 L.F. Concrete sidewalk in kind.

Install 20.00 L.F. 16" Force Main.

Install 88.41 L.F. 16" Force Main.

Install 522.64 L.F. 16" Force Main.

Install 20.00 L.F. 16" Force Main.

Remove and reset/replace Existing Rip-rap in kind.

Install 84.39 L.F. 16" Force Main.

Install 15.17 L.F. 16" Force Main.

* PRIOR TO BEGINNING CONSTRUCTION, THE CONTRACTOR SHALL EXCAVATE THE EXISTING 12" SWS FORCE MAIN AT STATION 25+30.61 TO VERIFY PIPE SIZE, TYPE, FITTINGS, AND HORIZONTAL AND VERTICAL LOCATION. THE CONTRACTOR SHALL REPORT HIS FINDINGS TO THE ENGINEER SO THAT ANY NECESSARY PLAN MODIFICATIONS MAY BE MADE. ANY ADDITIONAL LABOR OR MATERIALS NECESSARY TO COMPLETE THE CONNECTION SHALL BE CONSIDERED SUBSIDIARY TO THE PROJECT.

℄ – Denotes Caps or Plugs to be installed.
X– Denotes Storm Sewer to be abandoned in pluce or trees to be removed.

Unless noted otherwise, elevations shown are top of pipe

SWS FORCE MAIN NO. 1

Match Point
24" RCP SWS
8" PVC SWS
8" PVC SWS
12" PVC SWS
45° Bend
45° Bend
45° Bend
45° Bend
42" RCP SWS
Cross Valve Vault
90° Bend
Exist. 12" SWS
Existing Ground
Top of Proposed 16" Force Main

PLAN | CHECKED | BY | DATE

PROFILE | CHECKED | BY | DATE

DSNR: MDK OPER: JLM SCALE: 1=40.00
Q:\2004\04275\SWS Force Main\SWSPP02 07-14-2004 08:58:06 am

EVERGREEN AND NEWMARKET SQUARE ADDITIONS
STORM WATER SEWER NO. 603

SWS FORCE MAIN NO. 1
STA. 17+80.00 TO STA. 25+30.61

JAMES L. ARMOUR, P.E.– ACTING CITY ENGINEER
CITY OF WICHITA PROJECT NO. 468-83827

Professional Engineering Consultants, P.A.
303 S. TOPEKA • WICHITA, KANSAS 67202
316-262-2691 • FAX 316-262-8003

Designed By MDK | Job No. 35-04275-042
Drawn By TLB | Date May 2004

Sheet 7 of 13

MICHAEL D. KITCH
LICENSED
13944
7/14/04
KANSAS
PROFESSIONAL ENGINEER

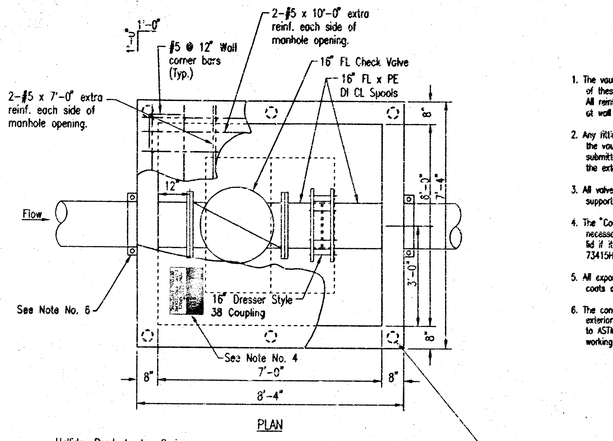

PLAN

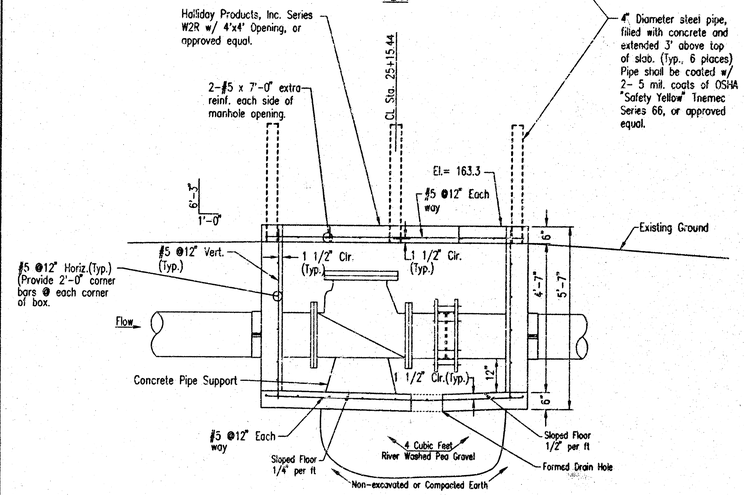

SECTION

CHECK VALVE VAULT DETAIL

NOTES

1. The vault shall be poured concrete, or approved precast structure. The intent of these details shall not be limited by drawings or standards of precast structures. All reinforcing shall conform to ASTM A615 Grade 60. Field cut or bend reinforcing at wall or slab openings.
2. Any fittings or appurtenances required to achieve proper elevation of pipe through the vault shall be provided by the contractor and appropriately noted on as-builts submitted by the inspecting engineer. Such fittings shall be a minimum of 2' from the exterior wall of vault.
3. All valves, and fittings shall be provided with sufficient concrete or other approved supports to the vault floor.
4. The "Confined Space Warning" sign shall be fastened to the top of all vaults. If necessary for landscaping or site considerations, the sign may be fastened to the vault lid if it does not impede access to the handle. Acceptable materials: Aluminum 73415HH, Plastic 73439HH, or S.A. Vinyl 73463HH.
5. All exposed D.I. pipe and fittings shall be factory primed and Epoxy coated with 2 coats of Tnemec Series 66, or approved equal.
6. The contractor shall install a mega lug, restrained joint, or approved equal on the exterior walls of the vault, which shall be manufactured of ductile iron conforming to ASTM A 536-80, heat treated to a minimum hardness of 370 BHN and have a working pressure of at least 250 P.S.I.

4" Diameter steel pipe, filled with concrete and extended 3' above top of slab. (Typ., 6 places) Pipe shall be coated w/ 2- 5 mil. coats of OSHA "Safety Yellow" Tnemec Series 66, or approved equal.

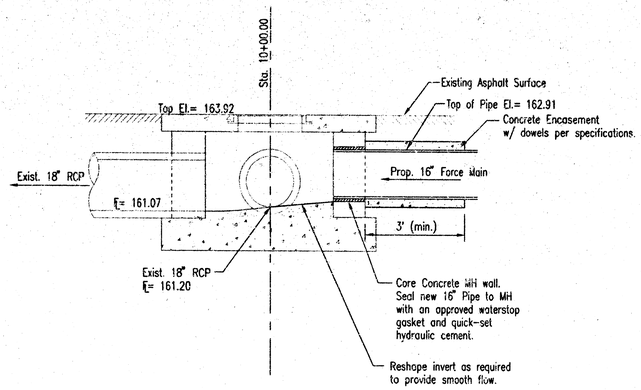

FORCE MAIN CONNECTION DETAIL

This work shall be subsidiary to the price bid for pipe in place.

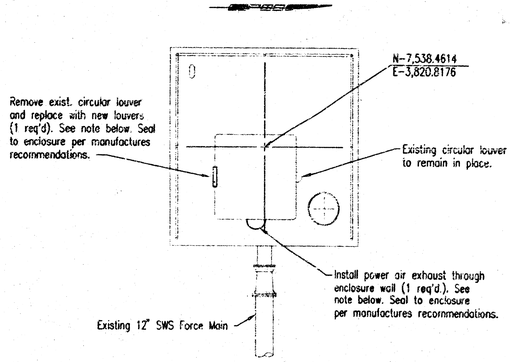

PLAN

Exhaust Fan:
450 CFM @ 0.125" ESP. Low-silhouette spun-aluminum centrifugal wall exhauster with aluminum mesh bird screen, backdraft damper, and fan speed controller. Mount speed controller inside enclosure for balancing. Provide line-voltage cooling thermostat to cycle fan based on encloser temperature. 1/6 HP ODP direct drive motor, 115V 1 phase. Fan shall be Aerovent FAWX or approved equal.

Provide 120V. connection to exhaust fan via a fustat from an existing 120V circuit at pump station. If no existing 120V circuit with adequate capacity is available,provide and install a 480V. primary/120V.secondary control power transformer sized adequately for the exhaust fan load. Provide over current protection and fustat as required for installation.

Louver:
2" deep extruded aluminum drainable stationary louver. Minimum frame and blade thickness, 0.060". Aluminum birdscreen, integral flange frame. Maximum pressure drop of 0.04" WC at 450 CFM intake. Maximum water penetration of 0.01 oz/sq. ft. at 1197 fpm. Provide gravity backdraft damper. Louver shall be Ruskin ELF211D or approved equal.

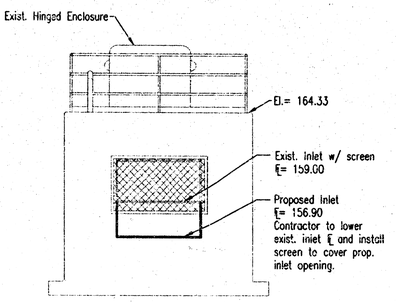

WEST ELEVATION

EXISTING LIFT STATION INLET DETAIL

Not to Scale

No.	Revision	By	Date

EVERGREEN AND NEWMARKET SQUARE ADDITIONS
STORM WATER SEWER NO. 608

MISCELLANEOUS DETAILS

JAMES L. ARMOUR, P.E.- ACTING CITY ENGINEER
CITY OF WICHITA PROJECT NO. 468-83827

Professional Engineering Consultants, P.A.
303 S. TOPEKA - WICHITA, KANSAS 67202
316-262-2691 • FAX 316-262-3003

Designed by	MDK	Job No.	35-04275-042	Sht. 8 of 13
Drawn by	TLB	Date	May 2004	

MICHAEL D. KELSEY 13944 7/14/04 KANSAS PROFESSIONAL ENGINEER

DSNR: MDK OPER: JLM SCALE: 1=2.00
Q:\2004\04275\SWS Force Main\Misc Detail 07-14-2004 08:45:04 am

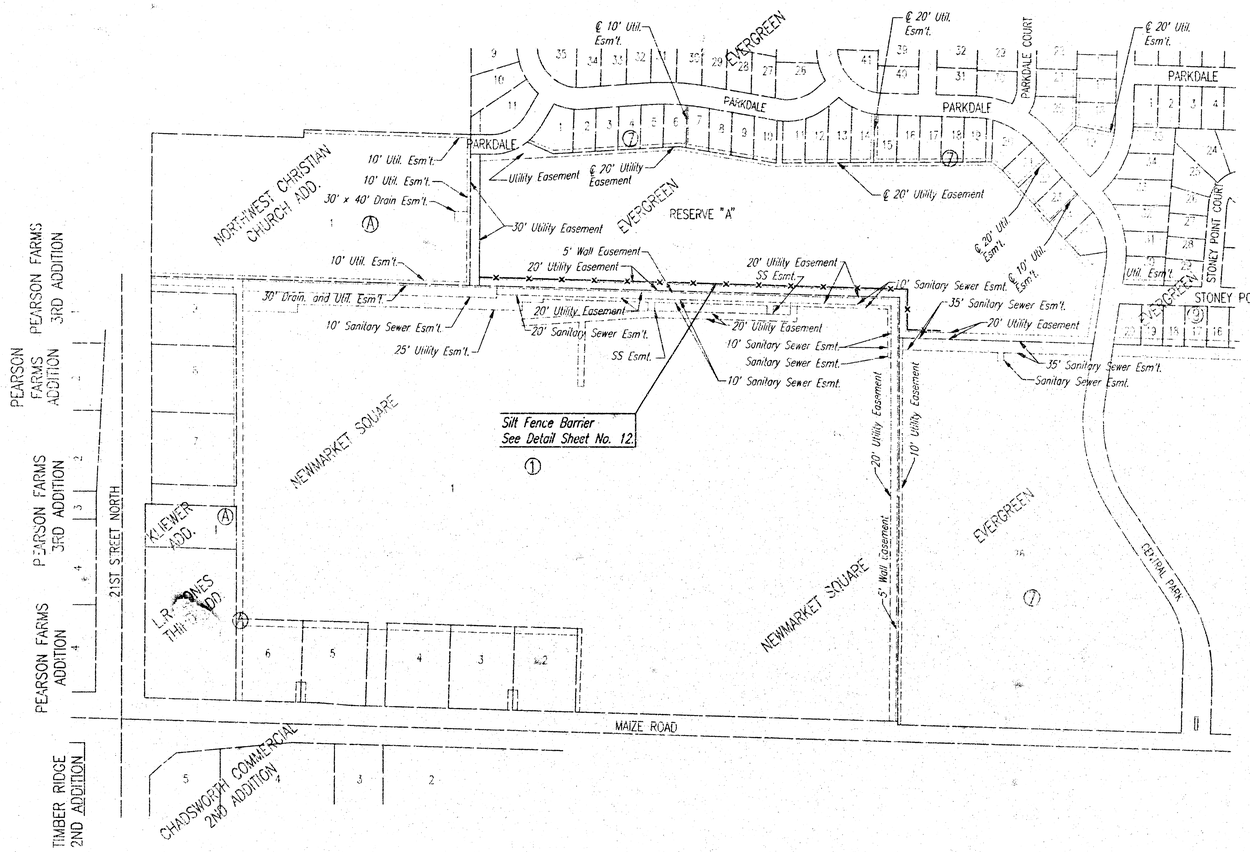

GENERAL NOTES

1. THE EROSION CONTROL DEVICES SHOWN ON THIS SHEET ARE CONSIDERED MINIMUM STANDARDS. WHENEVER SEDIMENT ENTERS THE STREETS, STORM SEWERS, DITCHES, OR PONDS, CONTRACTOR WILL INSTALL ADDITIONAL DEVICES, AS NEEDED, TO CORRECT THE PROBLEM.

2. THE EROSION CONTROL DEVICES SHOWN HEREON MUST BE IN PLACE AT ALL TIMES DURING CONSTRUCTION UNTIL SUCH TIME AS THE SITE IS REESTABLISHED WITH PAVING OR GRASS. TEMPORARY OR PERMANENT AND MULCH WILL BE INSTALLED WHEN EARTHWORK ACTIVITIES CEASE IN AN AREA FOR 14 DAYS OR MORE.

3. BACK OF CURB PROTECTION: AS SHOWN ON CITY STANDARD DETAILS. THESE DEVICES MUST REMAIN IN PLACE UNTIL THE AREA BETWEEN THE CURB AND RIGHT-OF-WAY LINE HAS BEEN PERMANENTLY STABILIZED.

4. ANY MUD INADVERTENTLY TRACKED ONTO ANY STREET WILL BE CLEANED UP BY THE CONTRACTOR, AT THE END OF EACH DAY'S WORK.

LEGEND

—×— Silt Fence Barrier

DSNR: MDK OPER: JLM SCALE: 1=200.00
Q:\2004\04275\SWS Force Main\Erosion Control Plan1 07-14-2004 08:41:50 am

MICHAEL D. KELSEY LICENSED 13944 7/14/04 KANSAS PROFESSIONAL ENGINEER

No.	Revision	By	Date

EVERGREEN AND NEWMARKET SQUARE ADDITIONS
STORM WATER SEWER NO. 608

EROSION CONTROL (BMP) PLAN

JAMES L. ARMOUR, P.E.- ACTING CITY ENGINEER
CITY OF WICHITA PROJECT NO. 468-83827

Professional Engineering Consultants, P.A.
303 S. TOPEKA • WICHITA, KANSAS 67202
316-262-2691 • FAX 316-262-3003

Designed by MDK	Job No. 35-04275-042	SN. 9 of 13
Drawn by TLB	Date May 2004	

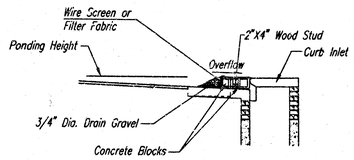

SECTION A-A

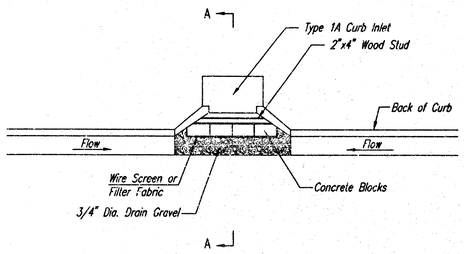

CURB INLET GRAVEL FILTERS
(INLET PROTECTION–RESIDENTIAL STREETS ONLY)

NOTE: Other types of curb inlet protection may be approved by the city so long as equal protection is provided.

A gravel inlet filter shall be installed at sump locations on residential streets. This type of protection is not to be used on arterial or collector streets at any time that it would pose an undue traffic hazard.

Instructions for Installing:

STEP 1: Place concrete blocks around the inlet as shown on drawing. Insert 2x4 board as shown.
STEP 2: Wrap 1/2" mesh wire screen around the concrete blocks.
STEP 3: Place 1" to 1-1/2" diameter rock around the blocks and wire screen. Be sure the rock extends down from the top of the concrete block.
STEP 4: To prevent damage to vehicles, signs warning drivers about the structures may be necessary. An alternative installation is the use of gravel bags supported by a 2"x4" board to prevent collapsing.

Use of rock with diameters smaller than 1" in the bag may result in clogging of pores and reduce the amount of water flowing into an inlet.

Maintenance:

All curb inlet gravel filters shall be inspected and repaired after each runoff event. Sediment deposits are to be removed once material is within 8 cm (3 inches) of the top of any block. Periodically, the gravel shall be raked to increase infiltration and filtering of runoff waters. Accumulated sediment is to be removed immediately from roads and streets.

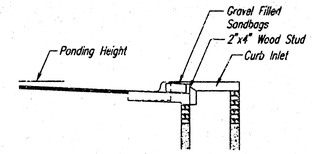

SECTION B-B

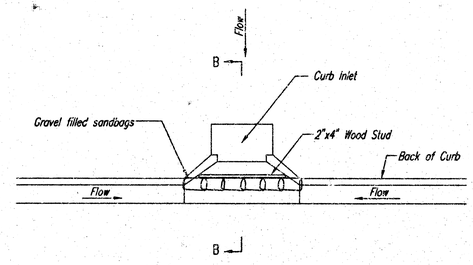

CURB INLET SANDBAG FILTERS
(INLET PROTECTION)

NOTE: Other types of curb inlet protection may be approved by the City so long as equal protection is provided.

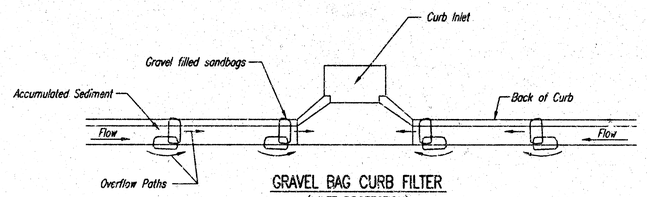

GRAVEL BAG CURB FILTER
(INLET PROTECTION)

NOTE: Place two or more sets of bags in a manner that results in maximum support. The flow line bag must be lower than top of curb.

CURB SEDIMENT TRAPS

When inlets are located on streets having a grade (i.e., sump conditions do not exist), installing gravel (or sand) bags in the gutter flow line to create small sediment traps can be considered. Gravel bags are recommended over sand bags to allow for drainage.

If the spacing between bags becomes too large, little sediment may be trapped. Spacing of bags should be completed using the table or graph that illustrates placement distances based upon street slope. When installed in the gutter, bag tops must be lower than the sidewalk.

Spacing:

Gravel bags are to be placed according to street grades using the following table or graph that appears below.

GRADE (%)	SPACING (FEET)
0.5	75
1.0	45
2.0	18
3.0	12
4.0	9
5.0	6

Maintenance:

Collected sediment shall be removed after every runoff event. Bags that are destroyed by vehicular traffic or through natural deterioration are to be immediately replaced.

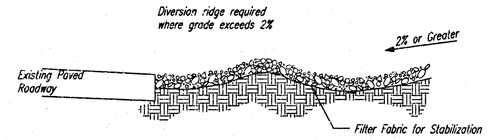

SECTION C-C

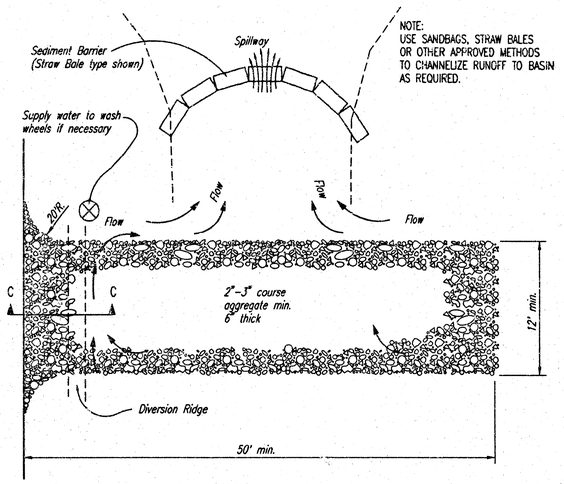

STABILIZED CONSTRUCTION ENTRANCE

NOTES:

1. THE ENTRANCE SHALL BE MAINTAINED IN A CONDITION THAT WILL PREVENT TRACKING OR FLOWING OF SEDIMENT ONTO PUBLIC RIGHTS-OF-WAY. THIS MAY REQUIRE TOP DRESSING, REPAIR AND/OR CLEANOUT OF ANY MEASURES USED TO TRAP SEDIMENT.
2. WHEN NECESSARY, WHEELS SHALL BE CLEANED PRIOR TO ENTRANCE ONTO PUBLIC RIGHT-OF-WAY.
3. WHEN WASHING IS REQUIRED, IT SHALL BE DONE ON AN AREA STABILIZED WITH CRUSHED STONE THAT DRAINS INTO AN APPROVED SEDIMENT TRAP OR SEDIMENT BASIN, AS SHOWN ABOVE.
4. DRIVE ENTRANCES ONTO RESIDENTIAL LOTS WILL NOT BE REQUIRED TO HAVE THE SEDIMENT BARRIER SHOWN, BUT WHEEL WASHING MAY BE REQUIRED IF STABILIZED ENTRANCE IS NOT SUFFICIENT TO KEEP MUD FROM BEING TRACKED ONTO ADJACENT STREET. ENTRANCE SHALL EXTEND FROM BACK OF CURB TO DWELLING.

DSNR: CDW OPER: JLM SCALE: 1=1.00
Q:\2004\04275\SWS Force Main\ErosionControl1 07-14-2004 08:41:32 am

CITY OF WICHITA

SOIL EROSION BMP DETAILS

CHRISTOPHER M. CARRIER, P.E.
STORM WATER ENGINEER

PROJECT NUMBER	OCA NO.
468-83827	751373
DATE: MAY 2001	SHEET 10 OF 13

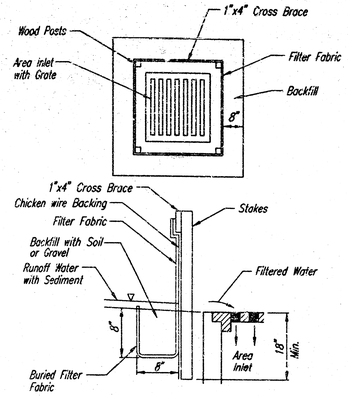

SILT FENCE BARRIERS FOR AREA INLETS
(INLET PROTECTION)

Material Specification:

Silt fence fabric should conform to the AASHTO M288 96 silt fence specification.
The wire or polymeric mesh backing used to help support the silt fence fabric should conform to the AASHTO M288 96 silt fence specification.
The posts used to support the silt fence fabric should be a hardwood material with the following minimum dimensions: 2" square (nominal) by 4' long.
The material used to frame the tops of the posts should be 1" by 4" boards.
Silt fence fabric and support backing should be attached to the wooden posts and frame with staples, wire, zip ties, or nails.

Placement:

Place a silt fence drop inlet barrier in a location where it is unlikely to be overtopped.
Water should flow through silt fence, not over it. Silt fence barriers for area inlets often fail when repeatedly overtopped.
When used as a barrier for area inlets, silt fence fabric and posts must be supported at the top by a wooden frame.
When a silt fence barrier for area inlets is located near an inlet that has steep approach slopes, the storage capacity behind the barrier is drastically reduced. Timely removal of sediment must occur for a barrier to operate properly in this location.

Proper installation method:

Excavate a trench around the perimeter of the area inlet that is at least 8" deep by 8" wide.
Drive posts to a depth of at least 18" around the perimeter of the area inlet.
The distance between posts should be 4' or less. If the distance between two adjacent corner posts is more than 4', add another post(s) between them.
Connect the tops of all the posts with a wooden frame made of 1" by 4" boards. Use nails or screws for fastening.
Attach the wire or polymeric-mesh backing to the outside of the post/frame structure with staples, wire, zip ties, or nails.
Roll out a continuous length of silt fence fabric long enough to wrap around the perimeter of the area inlet. Add more length for overlapping the fabric joint. Place the edge of the fabric in the trench, starting at the outside edge of the trench. Line all three sides of the trench with the fabric. Backfill over the fabric in the trench with the excavated soil and compact. After filling the trench, approximately 24" to 36" of silt fence fabric should remain exposed.
Attach the silt fence to the outside of the post/frame structure with staples, wire, zip ties, or nails. The joint should be overlapped to the next post.

Note: When a silt fence barrier for area inlet is placed in a shallow median ditch, make sure that the top of the barrier is not higher than the paved road. In this configuration, water may spread onto the roadway causing a hazardous condition.

List of common placement/installation mistakes to avoid:

Water should flow through a silt fence barrier for area inlet-not over it. Place a silt fence barrier for area inlet in a location where it is unlikely to be overtopped. Silt fence barrier for area inlets often fail when repeatedly overtopped.
Do not place posts on the outside of the silt fence barrier for area inlet. In this configuration, the force of the water is not resisted by the posts, but only by the staples (wire, zip ties, nails, etc.). The silt fence will rip and fail.
Do not install silt fence barrier for area inlets without framing the top of the posts. The corner posts around area inlets are stressed in two directions whereas a normal silt fence is only stressed in one direction. This added stress requires more support.

Inspection and Maintenance:

Silt fence barrier for area inlets should be inspected every 7 days and within 24 hours of a rainfall of 1/2" or more. The following is a list of questions that should be addressed during each inspection:

Does water flow under the silt fence?
Does the silt fence sag excessively?
Has the silt fence torn or become detached from the posts?
Does sediment need to be removed from behind the area inlet barrier?

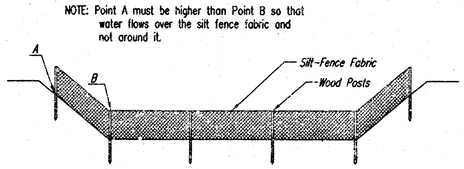

ELEVATION

SILT FENCE DITCH CHECKS
(STREAM PROTECTION)

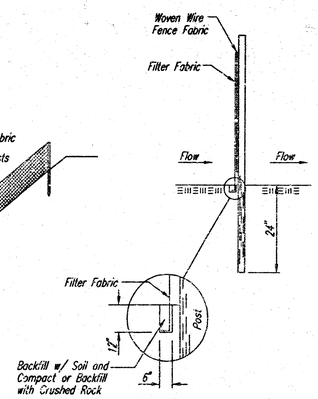

ANCHOR TRENCH DETAIL

Material Specification:

Silt fence fabric should conform to the AASHTO M288 96 silt fence specification.
The posts used to support the silt fence fabric should be a hardwood material with the following minimum dimensions: 2" square (nominal) by 4' long.
Silt fence fabric should be attached to the wooden posts with staples, wire, zip ties, or nails.

Placement:

Place silt fence in ditches where it is unlikely that it will be overtopped.
Water should flow through a silt fence ditch check, not over it. Silt fence ditch checks often fail when overtopped.
Silt fence ditch checks should be placed perpendicular to the flowline of the ditch.
The silt fence should extend far enough so that the ground level at the ends of the fence is higher than the top of the low point of the fence. This prevents water from flowing around the check.
Checks should not be placed in ditches where high flows are expected. Rock checks should be used instead.
Silt fence should be placed in ditches with slopes of 6% or less. For slopes steeper than 6%, rock checks should be used.

The following table provides check spacing for a given ditch grade:

Ditch grade (%)	Check Spacing (feet)
0.5	200
1.0	200
2.0	100
3.0	65
4.0	50
5.0	40
6.0	30

Proper installation method:

Excavate a trench perpendicular to the ditch flowline that is at least 12" deep by 6" wide.
Extend the trench in a straight line along the entire length of the proposed ditch check.
Place the soil on the upstream side of the trench for later use.
Roll out a continuous length of silt fence fabric on the downstream side of the trench.
Place the edge of the fabric in the trench starting at the top upstream edge of the trench. Line two sides of the trench with the fabric as shown on detail. Backfill over the fabric in the trench with the excavated soil and compact. After filling the trench, approximately 24" to 36" of silt fence fabric should remain exposed.
Lay the exposed silt fence on the upstream side of the trench to clear an area for driving in the posts. Just downstream of the trench, drive posts into the ground to a depth of at least 24". Place posts no more than 4' apart.
Attach the silt fence to the anchored post with staples, wire, zip ties, or nails.

List of common placement/installation mistakes to avoid:

Water should flow through a silt fence ditch check-not over it. Place silt fence in ditches where it is unlikely that it will be overtopped. Silt fence installations quickly deteriorate when water overtops them.
Do not place silt fence posts on the upstream side of the silt fence fabric. In this configuration, the force of the water is not restricted by the posts, but only by the staples (wire, zip ties, nails, etc.). The silt fence will rip and fail.
Do not place a silt fence ditch check directly in front of a culvert outlet. It will not stand up to the concentrated flow.
Do not place silt fence ditch checks in ditches that will likely experience high flows. They will not stand up to concentrated flow.
Follow prescribed ditch check spacing guidelines. If spacing guidelines are exceeded, erosion will occur between the ditch checks.
Do not allow water to flow around the ditch check. Make sure that the ditch check is long enough so that the ground level at the ends of the fence is higher than the low point on the top of the fence.
Do not place silt fence ditch checks in channels with shallow soils underlain by rock. If the check is not anchored sufficiently, it will wash out.

Inspection and Maintenance:

Silt fence ditch checks should be inspected every 7 days and within 24 hours of a rainfall of 1/2" or more. The following is a list of questions that should be addressed during each inspection:

Does water flow around the ditch check?
Does water flow under the ditch check?
Does the silt fence sag excessively?
Has the silt fence torn or become detached from the posts?
Does sediment need to be removed from behind the ditch check?

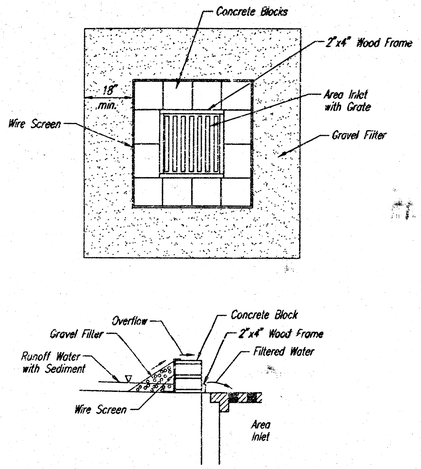

CONCRETE BLOCK FILTER FOR AREA DRAIN
(INLET PROTECTION)

Gravel barriers provide little filtering of large inflow waters. However, when installed correctly and maintained, they can effectively treat low runoff flows.

Placement of gravel filters around area drains must be completed in a manner that will not cause local flooding.

Gravel filters can be used if the immediate and adjacent area to the area drain consists of soil or pavement.

Only gravel filters are to be installed on top of the pavement.

instructions for installing:

STEP 1: Place concrete blocks around the grate. The blocks can be stacked one or two high and should be supported by a 2"x4" board.
STEP 2: Wrap 1/2" mesh wire screen around the concrete blocks.
STEP 3: Place 1" to 1-1/2" diameter rock around the blocks and wire screen. Be sure the rock extends down from the top of the concrete block.
STEP 4: To prevent damage to vehicles, signs warning drivers about the structures may be necessary.

An alternative method is use of gravel bags that are supported to prevent collapsing.

Use of rock having diameters smaller than 1" may result in clogging of pores and reduce the amount of water flowing into an inlet.

Maintenance:

All gravel filters installed around area drains should be inspected and repaired after each runoff event. Sediment should be removed when material is within 3" of the top of any block. Periodically, the gravel should be raked to increase infiltration and filtering of runoff waters. Accumulated sediment is to be removed immediately from roads and streets after every runoff event.

CITY OF WICHITA

SOIL EROSION BMP DETAILS

CHRISTOPHER M. CARRIER, P.E.
STORM WATER ENGINEER

PROJECT NUMBER	OCA NO.
468-83827	751373
DATE: MAY 2001	SHEET 11 OF 13

DSNR: COW OPER: JLM SCALE: 1=1.00
Q:\2004\04275\SWS Force Main\ErosionControl2 07-14-2004 08:41:15 am

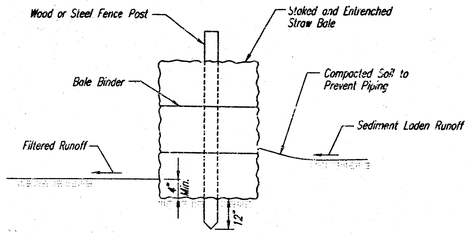

STRAW BALE BARRIERS

Material Specification:

Bale slope barriers may be constructed of wheat straw, oat straw, prairie hay, or bromegrass hay that is free of weeds declared noxious by the Kansas State Board of Agriculture.
The stakes used to anchor the bales should be a hardwood material with the following minimum dimensions: 2" square (nominal) by 4' long.

Placement:

A slope barrier should be used at the toe of a slope when a ditch does not exist. The slope barrier should be placed on nearly level ground 5' to 10' away from the toe of a slope. The barrier is placed away from the toe of the slope to provide adequate storage for settling out sediment.
When practicable, bale slope barriers should be placed along contours to avoid a concentration of flow.
Bale slope barriers can also be placed along right-of-way fence lines to keep sediment from crossing onto adjacent property. When placed in this manner, the slope barrier will not likely follow contours.

Proper installation method:

Excavate a trench the length of the planned slope barrier that is 4" deep and a bale's width wide. Make sure that the trench is excavated along a single contour. When practicable, slope barriers should be placed along contours to avoid a concentration of flow. Place the soil on the upslope side of the trench for later use.
Place the bales in the trench, making sure that they are butted tightly. Two stakes should be driven through each bale along the centerline of the ditch check, approximately 6" to 8" in from the bale ends. Stakes should be driven at least 12" into the ground.
Once all the bales have been installed and anchored, place the excavated soil against the upslope side of the check and compact it. The compacted soil should be no more than 3" to 4" deep.

List of common placement/installation mistakes to avoid:

When practical, do not place bale slope barriers across contours. Slope barriers should be placed along contours to avoid a concentration of flow. Concentrated flow over a slope barrier creates a scour hole on the downslope side of the barrier. The scour hole eventually undermines the bales and the barrier fails.
Do not place bale slope barriers in areas with shallow soils underlain by rock. If the barrier is not anchored sufficiently, it will wash out.
Bale slope barriers must be dug into the ground. Bales at ground level do not work because they allow water to flow under the barrier.

Inspection and Maintenance:

Bale slope barriers should be inspected every 7 days and within 24 hours of a rainfall of 1/2" or more. The following is a list of questions that should be addressed during each inspection:

Are there any points along the slope barrier where water is concentrating?
Does water flow under the slope barrier?
Does water flow through spaces between abutting bales?
Are any bales dislodged?
Are bales decomposing due to age and/or water damage?
Does sediment need to be removed from behind the slope barrier?

NOTE: Point A must be higher than Point B so that water flows over the bales and not around them.

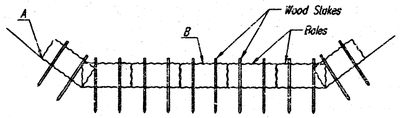

STRAW BALE DITCH CHECKS

Material Specification:

Bale ditch checks may be constructed of wheat straw, oat straw, prairie hay, or bromegrass hay that is free of weeds declared noxious by the Kansas State Board of Agriculture.
The stakes used to anchor the bales should be a hardwood material with the following minimum dimensions: 2" square (nominal) by 4' long.
Optional: The downstream scour apron should be constructed of a double-netted straw erosion-control blanket at least 6' wide.
Optional: The metal landscape staples used to anchor the erosion-control blanket should be at least 8" long.

Placement:

Bale ditch checks should be placed perpendicular to the flowline of the ditch.
The ditch check should extend far enough so that the ground level at the ends of the check is higher than the top of the lowest center bale. This prevents water from flowing around the check.
Checks should not be placed in ditches where high flows are expected. Rock checks should be used instead.
Bales should be placed in ditches with slopes of 6% or less. For slopes steeper than 6%, rock checks should be used.
The following table provides check spacing for a given ditch grade:

Ditch Check Spacing

Ditch grade (%)	Check Spacing (feet)
0.5	200
1.0	200
2.0	100
3.0	65
4.0	50
5.0	40
6.0	30

Proper installation method:

Excavate a trench perpendicular to the ditch flowline that is 4" deep and a bale's width wide. Extend the trench in a straight line along the entire length of the proposed ditch check. Place the soil on the upstream side of the trench-it will be used later.
Optional: On the downstream side of the trench, roll out a length of erosion-control blanket (scour apron) equal to the length of the trench. Place the upstream edge of the erosion-control blanket along the bottom upstream edge of the trench. The erosion control blanket should be anchored in the trench with one row of 8" landscape staples placed on 18" centers. The remainder of the erosion-control blanket (the portion that is not lying in the trench) will serve as the downstream scour apron. This section of the blanket should be anchored to the ground with 8" landscape staples placed around the perimeter of the blanket on 18" centers. The remainder of the blanket should be anchored using two evenly spaced rows of 8" landscape staples on 18" centers placed perpendicular to the flowline of the ditch.
Place the bales in the trench, making sure that they are butted tightly. Two stakes should be driven through each bale along the centerline of the ditch check, approximately 6" to 8" in from the bale ends. Stakes should be driven at least 12" into the ground.
Once all the bales have been installed and anchored, place the excavated soil against the upstream side of the check and compact it. The compacted soil should be no more than 3" to 4" deep and extend upstream no more than 24".

List of common placement/installation mistakes to avoid:

Do not place a bale ditch check directly in front of a culvert outlet. It will not stand up to the concentrated flow.
Do not place bale ditch checks in ditches that will likely experience high flows. They will not stand up to concentrated flow.
Follow prescribed ditch-check spacing guidelines. If spacing guidelines are exceeded, erosion will occur between the ditch checks.
Do not allow water to flow around the ditch check. Make sure that the ditch check is long enough so that the ground level at the ends of the check is higher than the top of the lowest center bale.
Do not place bale ditch checks in channels with shallow soils underlain by rock. If the check is not anchored sufficiently, it will wash out.
Bale ditch checks must be dug into the ground. Bales at ground level do not work because they allow water to flow under the check.

Inspection and Maintenance:

Bale ditch checks should be inspected every 7 days and within 24 hours of a rainfall of 1/2" or more. The following is a list of questions that should be addressed during each inspection:

Does water flow around the ditch check?
Does water flow under the ditch check?
Does water flow through spaces between abutting bales?
Are any bales and/or scour aprons (optional) dislodged?
Are bales decomposing due to age and/or water damage?
Does sediment need to be removed from behind the ditch check?

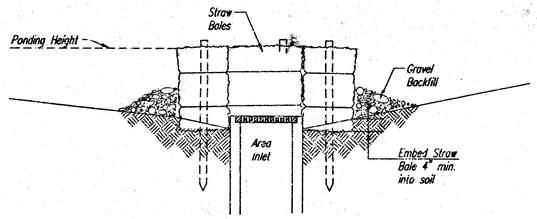

SECTION A-A

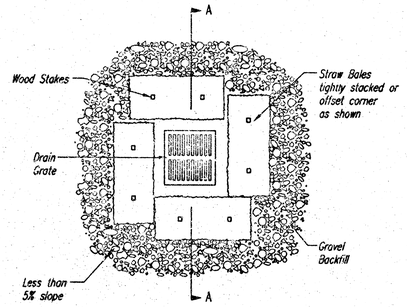

STRAW BALE BARRIERS FOR AREA INLETS
(INLET PROTECTION)

Material Specification:

Bale area inlet barriers should be constructed of wheat straw, oat straw, prairie hay, or bromegrass hay that is free of weeds declared noxious by the Kansas State Board of Agriculture.
The stakes used to anchor the bales should be a hardwood material with the following minimum dimensions: 2" square (nominal) by 4' long.

Placement:

Bale area inlet barriers should be placed directly around the perimeter of a drop inlet.
When a bale area inlet barrier is located near an inlet that has steep approach slopes, the storage capacity behind the barrier is drastically reduced. Timely removal of sediment must occur for a barrier to operate properly in this location.

Proper Installation Method:

Excavate a trench around the perimeter of the area inlet that is at least 4" deep by a bale's width wide.
Place the bales in the trench, making sure that they are butted tightly. Some bales may need to be shortened to fit into the trench around the area inlet. Two stakes should be driven through each bale, approximately 6" to 8" in from the bale ends.
Stakes should be driven at least 12" into the ground.
Once all the bales have been installed and anchored, place the excavated soil against the receiving side of the barrier and compact it. The compacted soil should be no more than 3" to 4" deep.
Note: When a bale area inlet barrier is placed in a shallow median ditch, make sure that the top of the barrier is not higher than the paved road. In this configuration, water may spread onto the roadway causing a hazardous condition.

List of common placement installation mistakes to avoid:

Bales should be placed directly against the perimeter of the area inlet. This allows overtopping water to flow directly into the inlet instead of onto nearby soil causing scour.
Bale area inlet barriers must be dug into the ground. Bales at ground level do not work because they allow water to flow under the barrier.

Inspection and Maintenance:

Bale area inlet barriers should be inspected every 7 days and within 24 hours of a rainfall 1/2" or more. The following is a list of questions that should be addressed during each inspection:

Does water flow under the area inlet barrier?
Does water flow through spaces between abutting bales?
Are any bales dislodged?
Are bales decomposing due to age and/or water damage?
Does sediment need to be removed from behind the area inlet barrier?

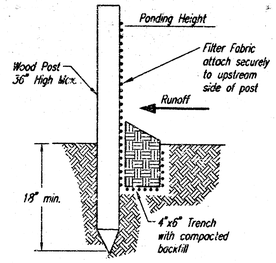

SILT FENCE BARRIERS

SILT FENCE BARRIERS

Material Specification:

Silt fence fabric should conform to the AASHTO M288 96 silt fence specification.
The posts used to support the silt fence fabric should be a hardwood material with the following minimum dimensions: 2" square (nominal) by 4' long.
Silt fence fabric should be attached to the wooden posts with staples, wire, zip ties, or nails.

Placement:

A slope barrier should be used at the toe of a slope when a ditch does not exist. The slope barrier should be placed on nearly level ground 5' to 10' away from the toe of a slope. The barrier is placed away from the toe of the slope to provide adequate storage for settling out sediment.
When practicable, silt fence slope barriers should be placed along contours to avoid a concentration of flow.
Silt fence slope barriers can also be placed along right-of-way fence lines to keep sediment from crossing onto adjacent property. When placed in this manner, the slope barrier will not likely follow contours.

Proper installation method:

Excavate a trench the length of the planned slope barrier that is 6" deep by 4" wide. Make sure that the trench is excavated along a single contour. When practicable, slope barriers should be placed along contours to avoid a concentration of flow. Place the soil on the upslope side of the trench for later use.
Roll out a continuous length of silt fence fabric on the downslope side of the trench. Place the edge of the fabric in the trench starting at the top upslope edge. Line all three sides of the trench with the fabric. Backfill over the fabric in the trench with the excavated soil and compact. After filling the trench, approximately 24" to 36" of silt-fence fabric should remain exposed.
Lay the exposed silt fence upslope of the trench to clear an area for driving in the posts. Just downslope of the trench, drive posts into the ground to a depth of at least 18".
Place posts no more than 4' apart.
Attach the silt fence to the anchored post with staples, wire, zip ties, or nails.

List of common placement/installation mistakes to avoid:

When practicable, do not place silt fence slope barriers across contours. Slope barriers should be placed along contours to avoid a concentration of flow. When the flow concentrates, it overtops the barrier and the silt fence slope barrier quickly deteriorates.
Do not place silt-fence posts on the upslope side of the silt fence fabric. in this configuration, the force of the water is not restricted by the posts, but only by the staples (wire, zip ties, nails, etc.). The silt fence will rip and fail.
Do not place silt fence slope barriers in areas with shallow soils underlain by rock. If the barrier is not sufficiently anchored, it will wash out.
Silt fence slope barriers must be dug into the ground-silt fence at ground level does not work because water will flow underneath.

Inspection and Maintenance:

Silt fence slope barriers should be inspected every 7 days and within 24 hours of a rainfall of 1/2" or more. The following is a list of questions that should be addressed during each inspection:

Are there any points along the slope barrier where water is concentrating?
Does water flow under the slope barrier?
Do the silt fences sag excessively?
Has the silt fence torn or become detached from the posts?
Does sediment need to be removed from behind the slope barrier?

CITY OF WICHITA

SOIL EROSION BMP DETAILS

CHRISTOPHER M. CARRIER, P.E.
STORM WATER ENGINEER

PROJECT NUMBER	OCA NO.
468-83827	751373
DATE: MAY 2001	SHEET 12 OF 13

DSNR: COW OPER: JLM SCALE: 1=1.00
Q:\2004\04279\SWS Force Main\ErosionControl3 07-14-2004 08:40:53 am

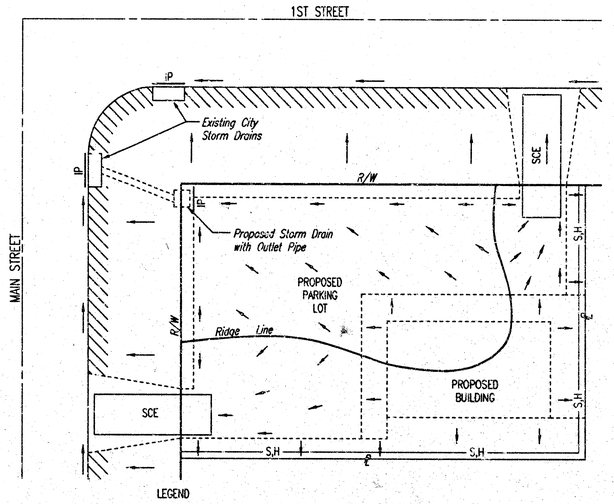

LEGEND

—— Flow Direction

—IP— Inlet Protection – to be provided at all inlets subject to silt laden runoff.

—S,H— Silt Fence or Hay Bale Barrier – to be installed along property lines where runoff from construction site can run onto other properties.

SCE Stabilized Construction Entrance – to be used at all locations where vehicles or equipment enter or exit property.

Back of Curb Protection – to be installed whenever curb is backfilled to less than 3 inches from top and disturbed earth exists adjacent thereto. (See City Standard Details.)

General Notes

1. This standard detail sheet is a part of your building permit. The BMP's shown on this sheet are considered minimum standards. Whenever sediment enters the streets, storm sewers, ditches, or ponds, contractor will install additional BMP's, as needed, to correct the problem.

2. Follow these general principals on all commercial building sides.

3. The soil erosion BMP's shown hereon must be in place at all times during construction until such time as the site is re-established with paving or grass.

4. Failure to install, protect, and maintain BMP's are violations of Section 16.32 of the City Code and will subject the contractor to the penalties provided therein. Included with your permit is an orange "notice" sign that must be posted on-site in a conspicuous place at all times during construction. This sign is provided to assist you in the maintenance of BMP's.

5. Back of Curb Protection: Can include hay bale, silt fence, or Curlex barrier, as shown on City BMP standard details. This BMP must remain in place until the area between the curb and right-of-way line has been permanently stabilized.

6. The General Contractor is responsible for the installation and maintenance of all BMP's.

7. Should the site abut a lake, BMP's will be installed to prevent sediment from entering the lake.

8. Any mud inadvertently tracked onto any street will be cleaned up by the general contractor at the end of each day's work.

DSNR: COW OPER: JLM SCALE: 1=1.00
G:\2004\04275\SWS Force Main\ErosionControl4 07-14-2004 08:40:36 am

CITY OF WICHITA

SOIL EROSION BMPS COMMERCIAL DEVELOPMENT SITES

CHRISTOPHER M. CARRIER, P.E.
STORM WATER ENGINEER

PROJECT NUMBER	OCA NO.
468-83827	751373
DATE: MAY 2001	SHEET 13 OF 13

14-06-05-05