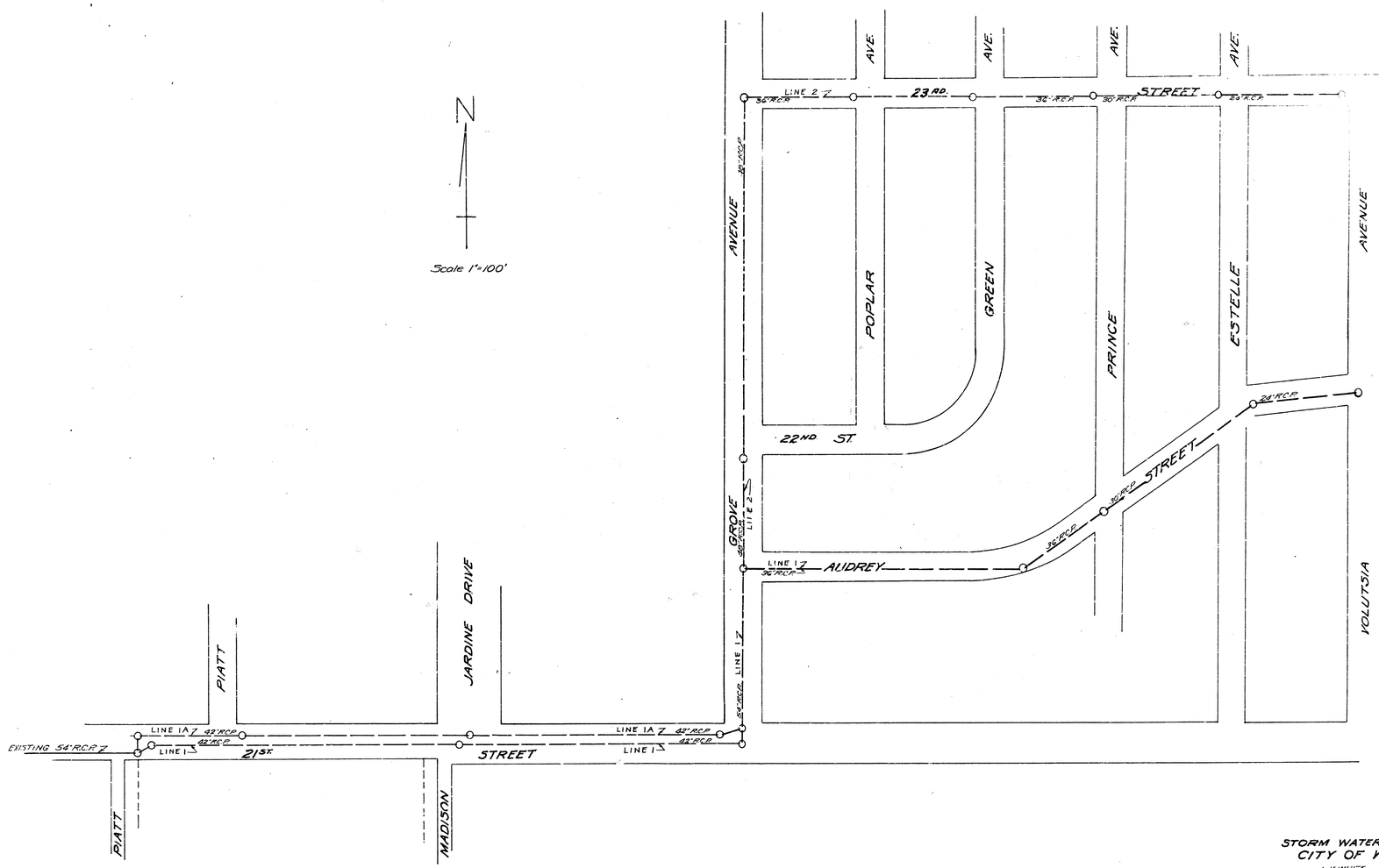

STORM WATER SEWER DIST. NO. 42
CITY OF WICHITA KANSAS
L. K. WHITE CITY ENGINEER
Proj. No. C 21-62
SEPT. 15, 1951

SHEET NO. 1 of 8

NOTE TO FIELD ENGINEER:—
Disregard top of curb elevations and the location shown for inlets on 21ST. Street and intersecting streets. Construct inlets to provide for existing drainage.

Sta. 0+00 LINE 1A Construct Reinf. Conc. Manhole, Install 1-48" Joint RCP WEST for future Storm Sewer. Plug opening with a brick & mortar joint wall. See Manhole Details SHEET NO. 6
F.L.El 116.38 OUT & IN

Sta. 0+30 Construct Std. Brick Manhole LINE 1

EXISTING 15" RCP F.L.El 121.00

Sta. 2+06 Const. Std. Brick Manhole LINE 1A

Sta. 12+70 Construct Std. Brick Manhole LINE 1A F.L. El. 123.37

Sta. 13+13 Construct Reinf. Conc. Manhole LINE 1 & 1A F.L.El. 123.69

Sta. 16+60.6 Construct Reinf. Conc. Manhole

Sta. 25+70 Construct Standard Brick Manhole

Sta. 31+30 Construct Standard Brick Manhole

NOTE. The inlets & 15" RCP on Volutsia Ave. are not to be included in this contract. See sheet No. 4 for details

Sta. 29+43 Construct Standard Brick Manhole

Sta. 22+46 Construct Standard Brick Manhole

EXISTING 10"VCP F.L.El 114.70 Construct Conc. Encasement.

Sta. 0+20 END EXISTING 54" RCP F.L.El 116.39 Const. Reinf. Conc. Manhole

Const. Reinf. Conc. Manhole Sta. 7+04.8 LINE 1A

Sta. 6+60 Construct Standard brick manhole. LINE 1

Sta. 12+90.1 Construct Standard Brick Manhole LINE 1

SCALE 1" = 100'

B.M. "B" in Globe E. Curb Minnesota N.L. 21ST. St. El 122.46

B.M. "D" on W. Curb Jardine W. & N.L. 21ST. St. El 126.69

B.M. "B" in Globe E. Curb Grove, S.L. 21ST. St. El 133.35

NOTE: SAND BACKFILL ALL TRENCHES UNDER FUTURE PAVEMENT 10' OUTSIDE CURB LINE.

SCALE 1" = 100' Horiz.
1" = 8' Vert.

Ground Line
Proposed Curb Line

F.L.El OUT 116.38 IN 116.38
F.L.El OUT 116.38 IN 116.38
F.L.El 117.51
F.L.El 120.26
F.L.El OUT 123.57 IN 123.57
F.L.El OUT 125.42 IN 127.42
F.L.El 130.35
F.L.El OUT 131.97 IN 134.97
F.L.El OUT 136.84 IN 137.34
F.L.El 138.28

STORM WATER SEWER DIST. NO. 42
CITY OF WICHITA KANSAS
L.K. WHITE CITY ENGINEER
Proj. No. C 21-62
SEPT. 13, 1951

SHEET NO. 2 of 8

GROVE CT

FL El EXISTING 8" V.C.P. 130.08

FL El EXISTING 8" V.C.P. 134.08

FL El EXISTING 8" V.C.P. 137.58

FL El EXISTING 8" V.C.P. 141.28

FL El EXISTING 8" V.C.P. 146.35

23 RD STREET

POPLAR

GREEN

PRINCE

ESTELLE

VOLUTSIA

200'

Sta 3+66.3 Construct Reinf. Conc Manhole

Sta 12+01.3 Construct Std Brick Manhole

Sta 14+61.3 Construct Std Brick Manhole

Sta 17+21.3 Construct Std Brick Manhole

Sta 19+81.3 Construct Std Brick Manhole

Sta 22+49.3 Construct Std Brick Manhole

NOTE: Manhole Sta 19+81.3 & 24" RCP East to Volutsia, Constructed as Incidental Drainage. Not included in this contract

N

SCALE 1"=100'

48" RCP

AVENUE

Sta 2+32.5 Construct Reinf. Conc Manhole

8" VCP

22 ND STREET

GROVE

Sta 16+60.6 Line 1 = Sta 0+00 Line 2
Construct reinforced concrete manhole
MH details Sh. "G" Intersection details Sh. "5"

FL El EXISTING 8" V.C.P. 125.08

8" V.C.P.

AUDREY

SCALE 1"=100 Horiz.
1"=8 Vert.

2+00

2+32.5

9+66.3

12+01.3

14+61.3

17+21.3

19+81.3

22+49.3

48" RCP Cl. 0.30%

FL El OUT 125.42
IN 125.92

FL El 126.62

0.30%

FL El OUT 128.82
IN 129.82

36" RCP Cl. 1.40%

FL El 133.11

FL El 136.76

FL El OUT 140.39
IN 140.89

FL El OUT 144.53
IN 145.53

24" RCP Cl. 1.40%

FL El 149.28

140
130
120
150
140
130

0100 5 10 15 20

STORM WATER SEWER DIST. NO. 42
CITY OF WICHITA KANSAS
L.K. WHITE CITY ENGINEER
Proj. No. C.21-62
SEPT. 15, 1951

SHEET NO. 3 of 8

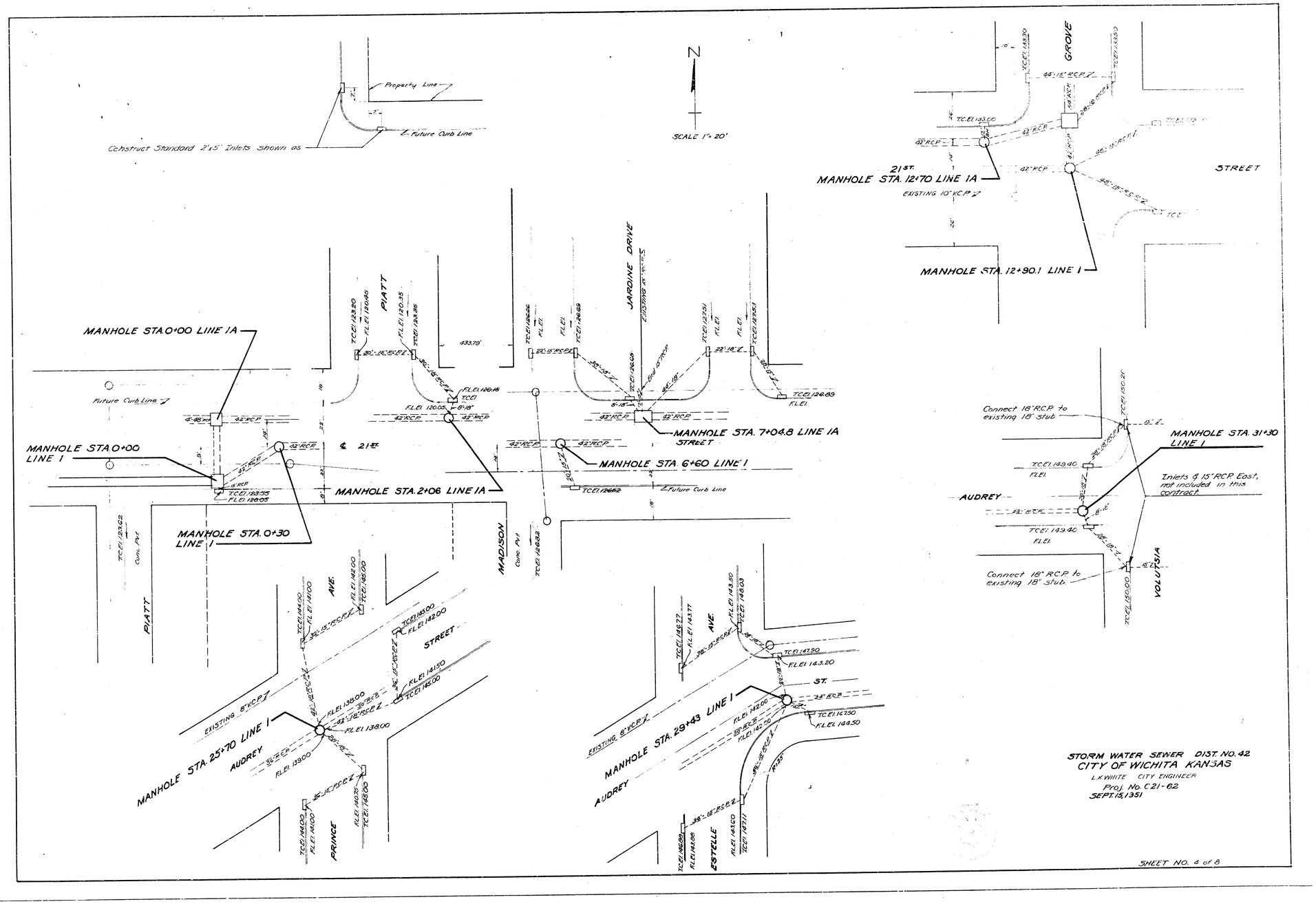

STORM WATER SEWER DIST. NO. 42
CITY OF WICHITA KANSAS
L.K. WHITE CITY ENGINEER
Proj. No. C21-62
SEPT. 15, 1951

SHEET NO. 4 of 8

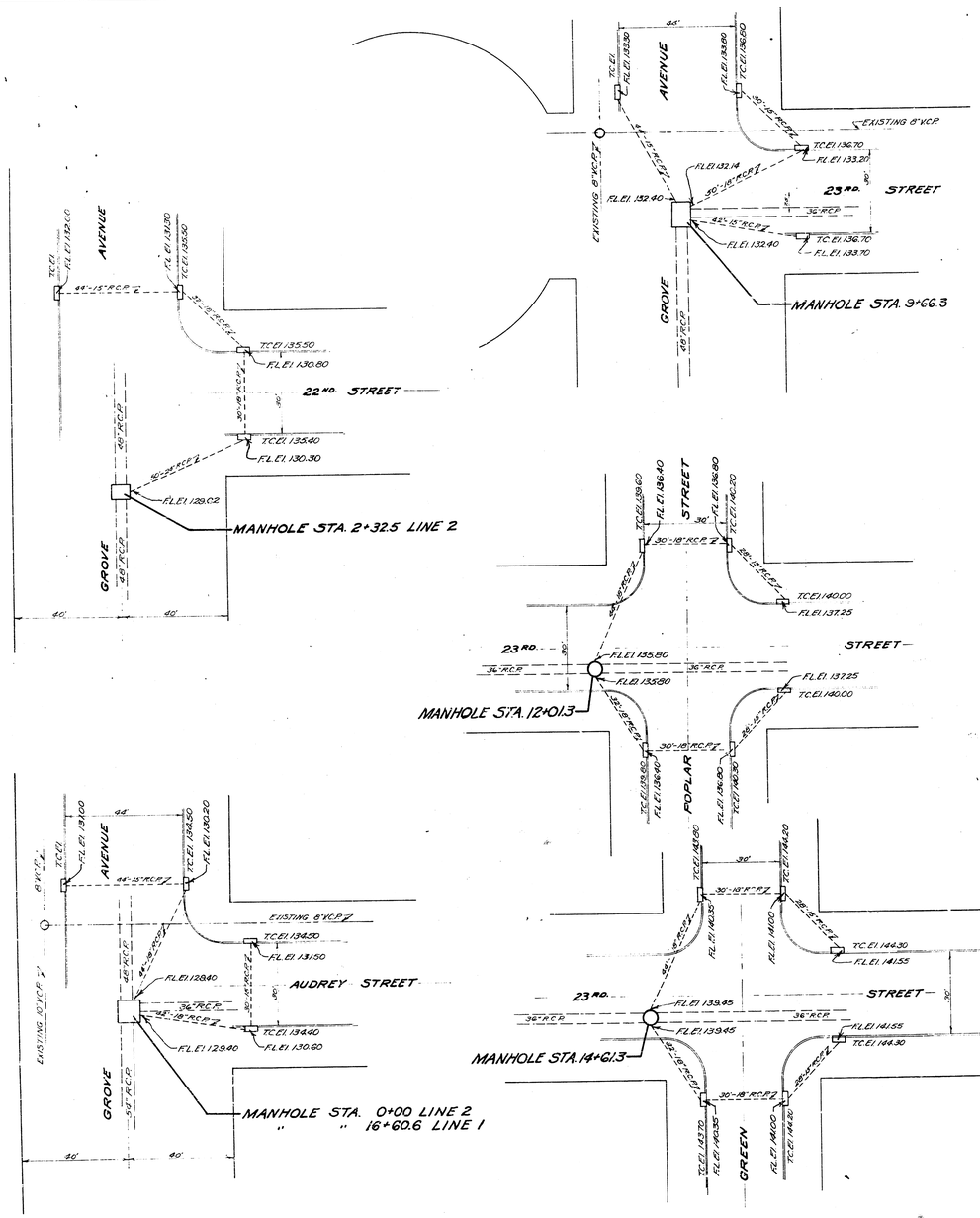

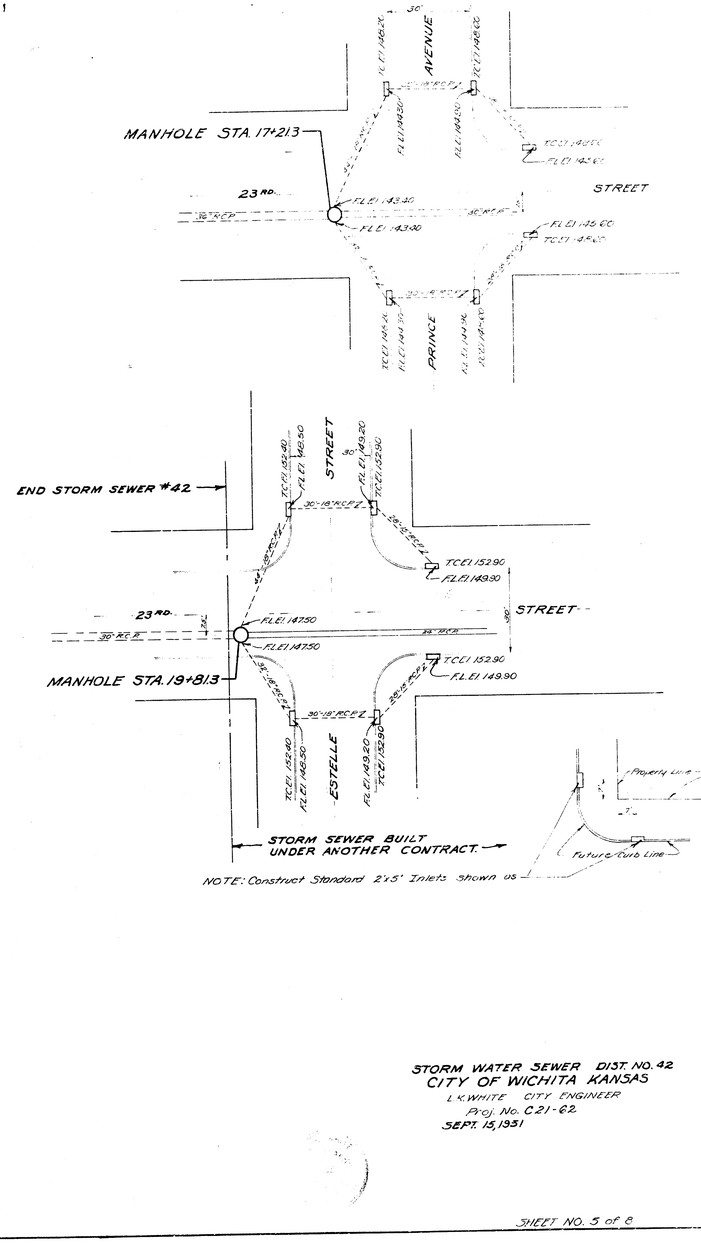

STORM WATER SEWER DIST. NO. 42
CITY OF WICHITA KANSAS
L.K. WHITE CITY ENGINEER
Proj. No. C.21-62.
SEPT. 15, 1951

MANHOLE STA. 0+00 LINE 1

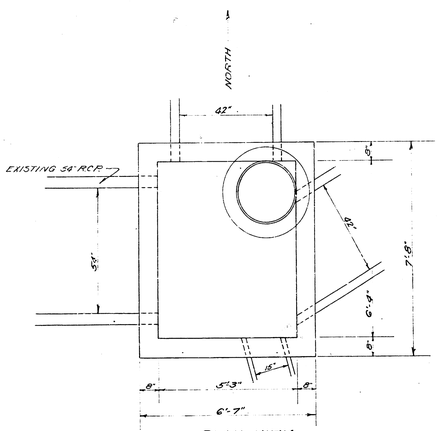

PLAN VIEW

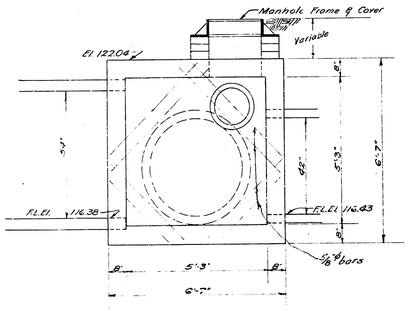

ELEVATION

MANHOLE STA. 0+00 LINE 1A

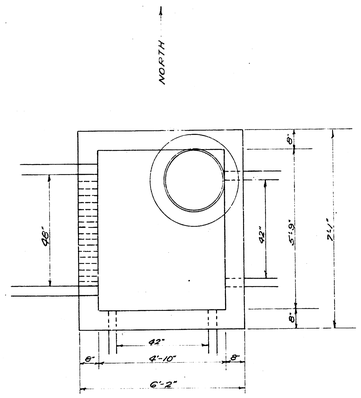

PLAN VIEW

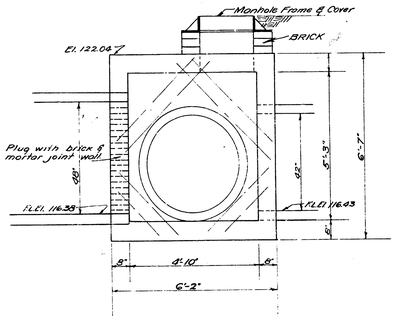

ELEVATION

MANHOLE STA. 13+15 LINE 1 & 1A

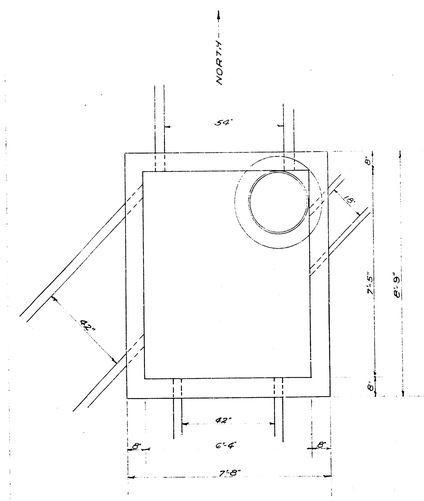

PLAN VIEW

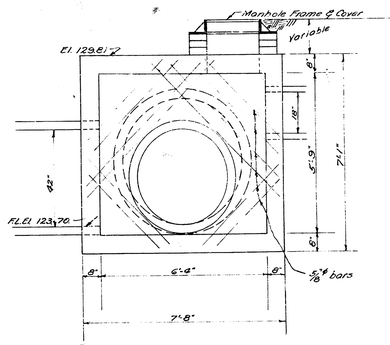

ELEVATION

MANHOLE STA. 16+60.6 LINE 1
0+00 LINE 2

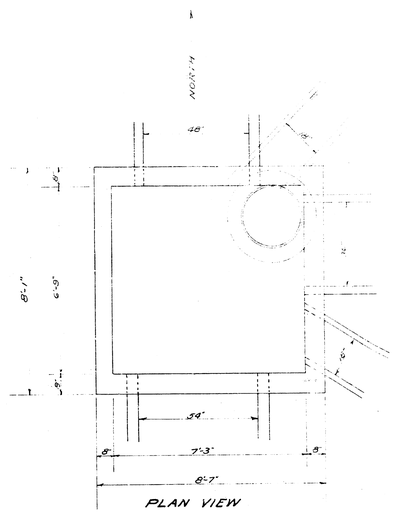

PLAN VIEW

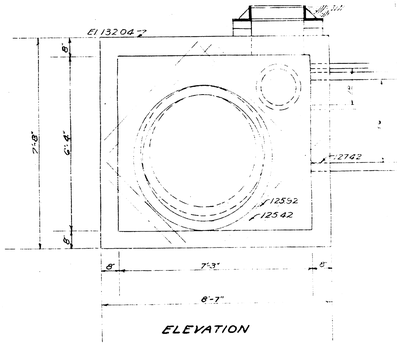

ELEVATION

STORM WATER SEWER DIST. NO. 42
CITY OF WICHITA KANSAS
L.K. WHITE CITY ENGINEER
Proj. No. C-21-62
SEPT. 15, 1951

MANHOLE STA. 2+32.5 LINE 2

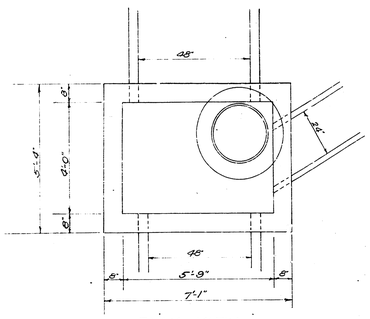

PLAN VIEW

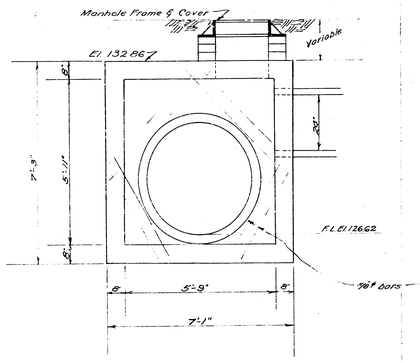

ELEVATION

MANHOLE STA. 9+66.3 LINE 2

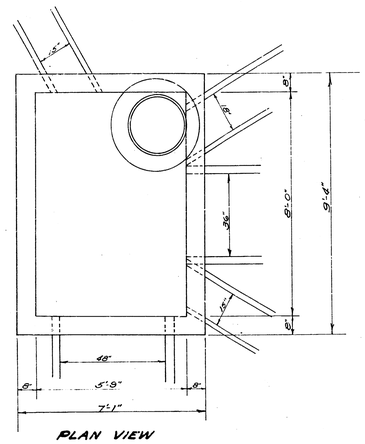

PLAN VIEW

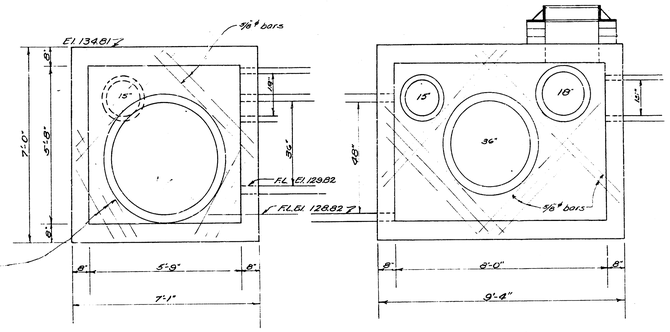

ELEVATION

ELEVATION

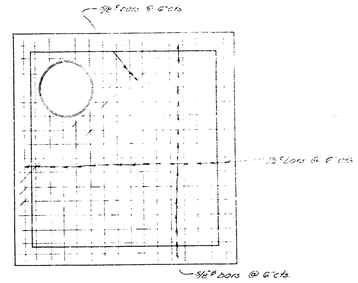

TYPICAL SEC. TOP & BOTTOM
STEEL PATTERN

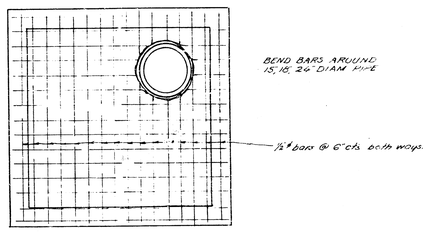

TYPICAL WALL SECTION
STEEL PATTERN

STORM WATER SEWER DIST. NO. 42
CITY OF WICHITA KANSAS
L.K. WHITE CITY ENGINEER
Proj. No. C21-62
SEPT. 15, 1951

MANHOLE STA. 7+04.8 LINE 1A

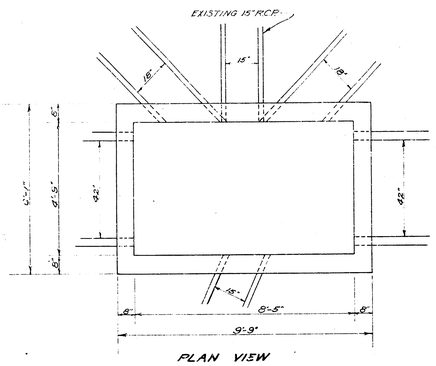

PLAN VIEW

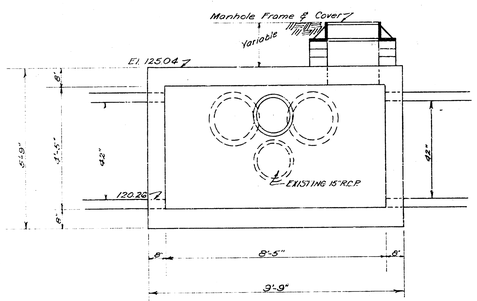

ELEVATION

CONCRETE ENCASEMENT DETAIL

No Scale

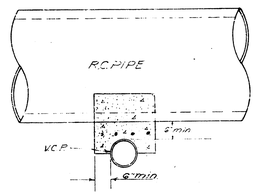

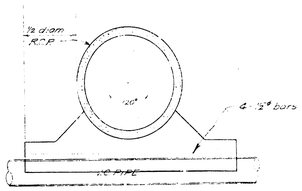

Concrete encasement of V.C.Pipe at all points where RC.Pipe crosses, as required by the field engineer.

Concrete for manholes shall contain not less than 1.65 bbls. of cement per cubic yard of concrete. In no event shall the total water content exceed 6.25 gallons per sack of cement. The mixture of fine and course aggregate shall be such as will produce a maximum density of the most workable mixture.

IN GENERAL: Pipes will enter and leave the manholes at various angles and elevations. Where possible bend reinf. bars around pipes. (24" diam. or less). Where pipes are large use ⅝ diagonal bars as shown.

The floor of the manhole is to be shaped for flow and drainage with concrete. No deduction in conc. quantities shall be made for pipe openings. No addition in conc. quantities shall be made for shaping manhole floor. An internal vibrator is to be used for placing concrete.

STORM WATER SEWER DIST. NO. 42
CITY OF WICHITA KANSAS
L.K. WHITE CITY ENGINEER
Proj. No. C21-62
SEPT. 15, 1951