BENEFIT DISTRICT
STORM WATER SEWER DISTRICT
NO. 45
CITY OF WICHITA KANSAS
PROJECT NO. C 22-21

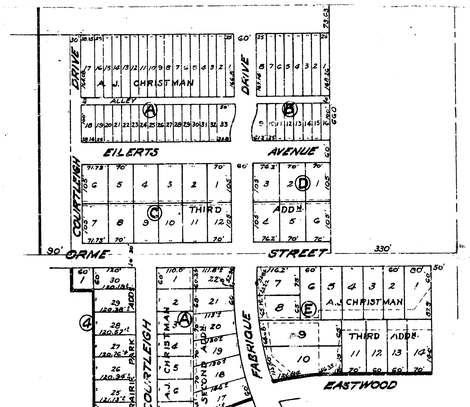

STORM WATER SEWER DIST NO 45
CITY OF WICHITA KANSAS

L.K. WHITE CITY ENGINEER
Proj. No. C22-21
MARCH 1, 1952

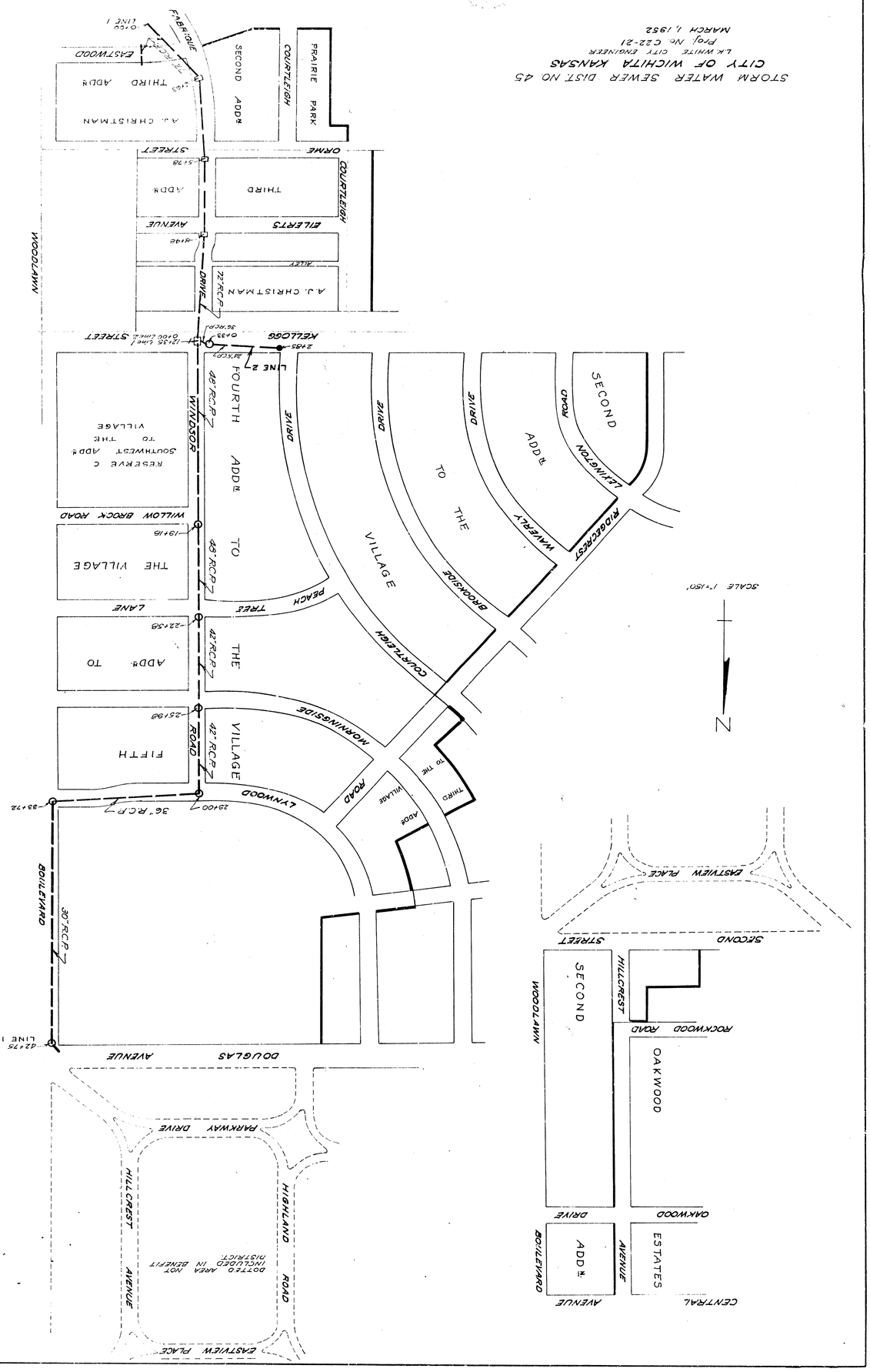

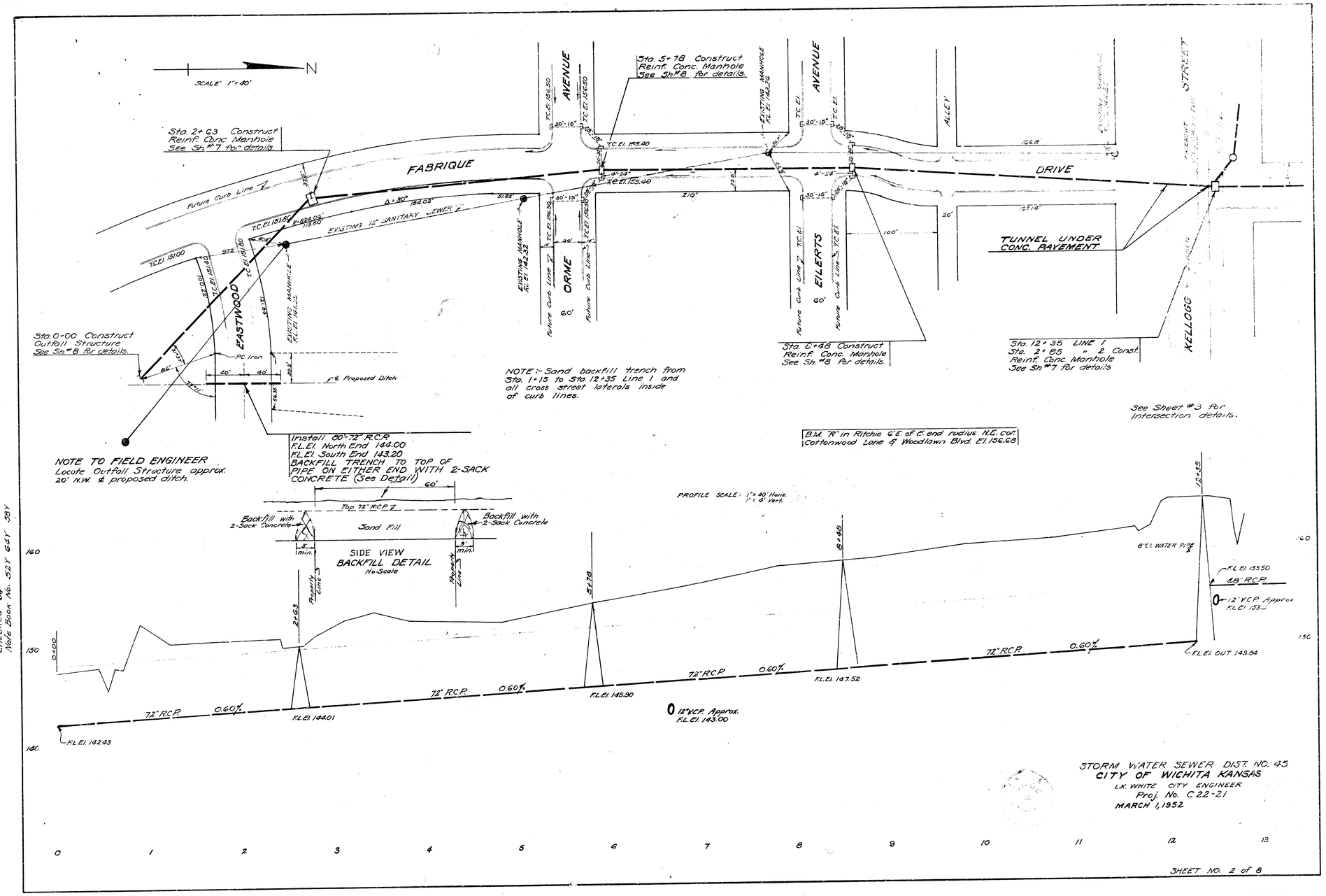

Date 3-1-52
Drawn by J.L.A.
Checked by
Note Book No. 52Y 64Y 58Y

STORM WATER SEWER DIST. NO. 45
CITY OF WICHITA KANSAS
L.K. WHITE CITY ENGINEER
Proj. No. C22-21
MARCH 1, 1952

SHEET NO. 2 of 8

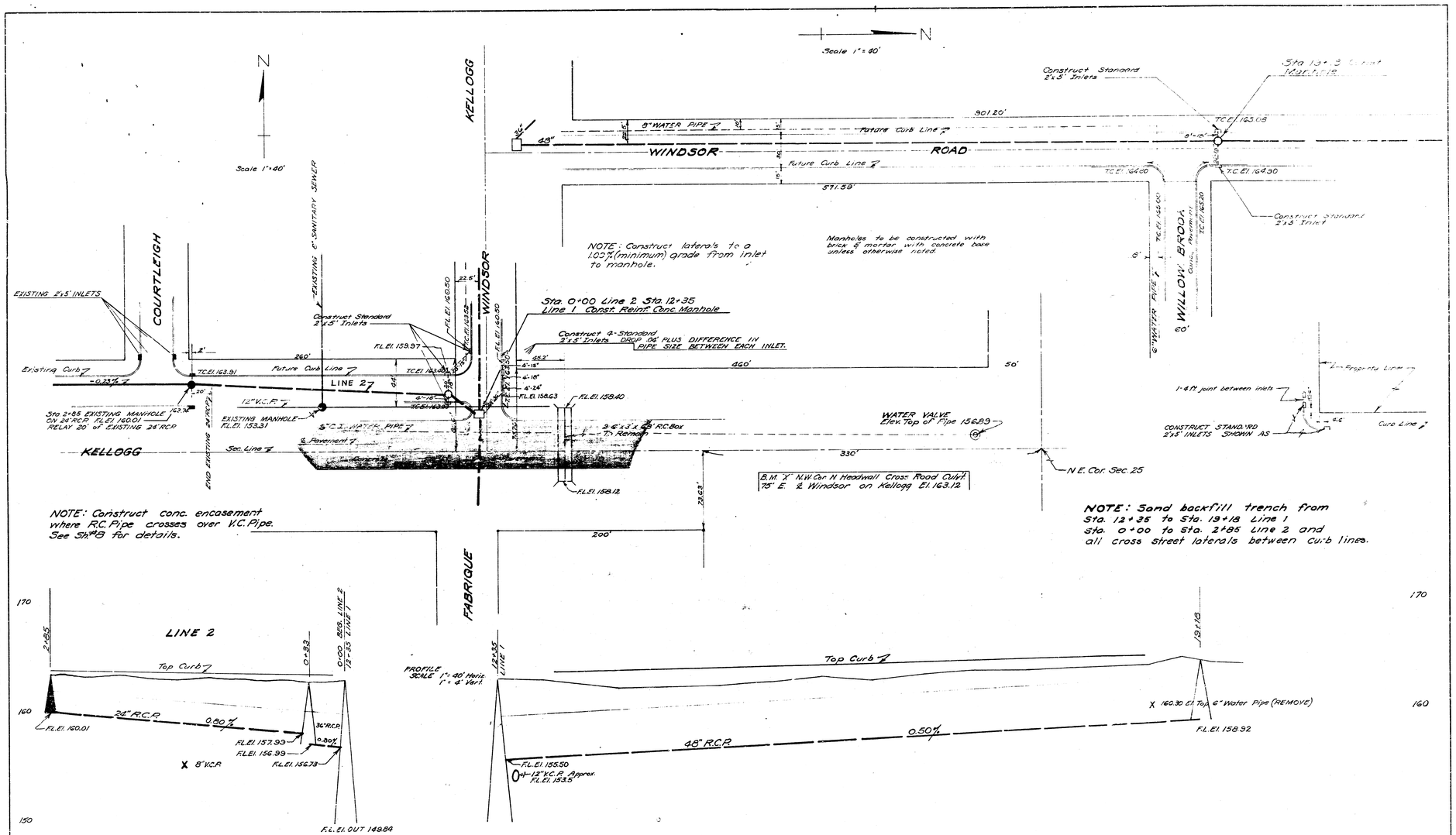

Date
Drawn by J.L.A.
Checked by
Note Book No. S-3 H-7 11-20

STORM WATER SEWER DIST. NO. 45
CITY OF WICHITA KANSAS
L.K. WHITE CITY ENGINEER
Proj. No. C 22-21
MARCH 1, 1952

SHEET NO. 3 of 8

ø B.M.

Manholes to be constructed with brick & mortar with concrete base unless otherwise noted.

N

SCALE 1"=40'

Sta. 19+16 Const. Manhole

EXISTING MANHOLE FL EL 160.25

8" WATER LINE

8" V.C.P. SEWER

FL EL 164.40

TC EL 164.62

FL EL 163.80

LANE

FL EL 163.20

TC EL 163.80

FL EL 163.07

EXISTING MANHOLE FL EL 160.54

Const. Standard 2'x5' Inlets.

EXISTING MANHOLE FL EL 160.56

8" SANITARY SEWER

FL EL 167.00

TC EL 170.00

FL EL 163.67

EXISTING MANHOLE FL EL 161.06

Const. Standard 2'x5' Inlets.

Construct 2'x5' Standard Inlets

TC EL 171.60

BOULEVARD

Sta 28+44 Const. Manhole

Sta 29+00 Const. Manhole

WINDSOR ROAD

TC EL 164.96

TC EL 167.20

TC EL 167.60

TC EL 170.60

TC EL 171.30

280'

180'

150'

260'

0.28'

WILLOW-BROOK ROAD

Pharmacy

Const. Standard 2'x5' Inlet

PEACH-TREE

FL EL 163.40

FL EL 163.07

FL EL 163.85

Sta. 22+58 Const. Manhole

Const. Standard 2'x5' Inlets.

MORNINGSIDE

FL EL 167.00

FL EL 163.67

Sta. 25+98 Const. Manhole

Const. Standard 2'x3' Inlets.

LYNWOOD

TC EL 171.60

FL EL 164.35

4'-15"

Construct 2-2'x5' Standard Inlets

60'

NOTE:- Sand backfill trench from Sta. 19+18 to Sta. 29+00 and all cross street laterals between curb lines.

B.M. 60" Spike E. Side P. Pole
195' Lt Sta. 20+30 El. 169.91

Date
Drawn by J.L.A.
Checked by
Note Book No. M 25

19+18

22+58

25+98

28+44

29+00

Top Curb

Ground Line

170

160

48" R.C.P. 0.50%

F.L.El. 158.92

42" R.C.P. 0.50%

F.L.El. OUT 160.62 IN 161.12

42" R.C.P. 0.50%

F.L.El. 162.82

42" R.C.P. 0.50%

F.L.El. 164.05

F.L.El. OUT 164.33 IN 164.83

19 20 21 22 23 24 25 26 27 28 29

STORM WATER SEWER DIST. NO. 25
CITY OF WICHITA KANSAS
L.K. WHITE CITY ENGINEER
Proj. No. C 22-21
MARCH 1, 1952

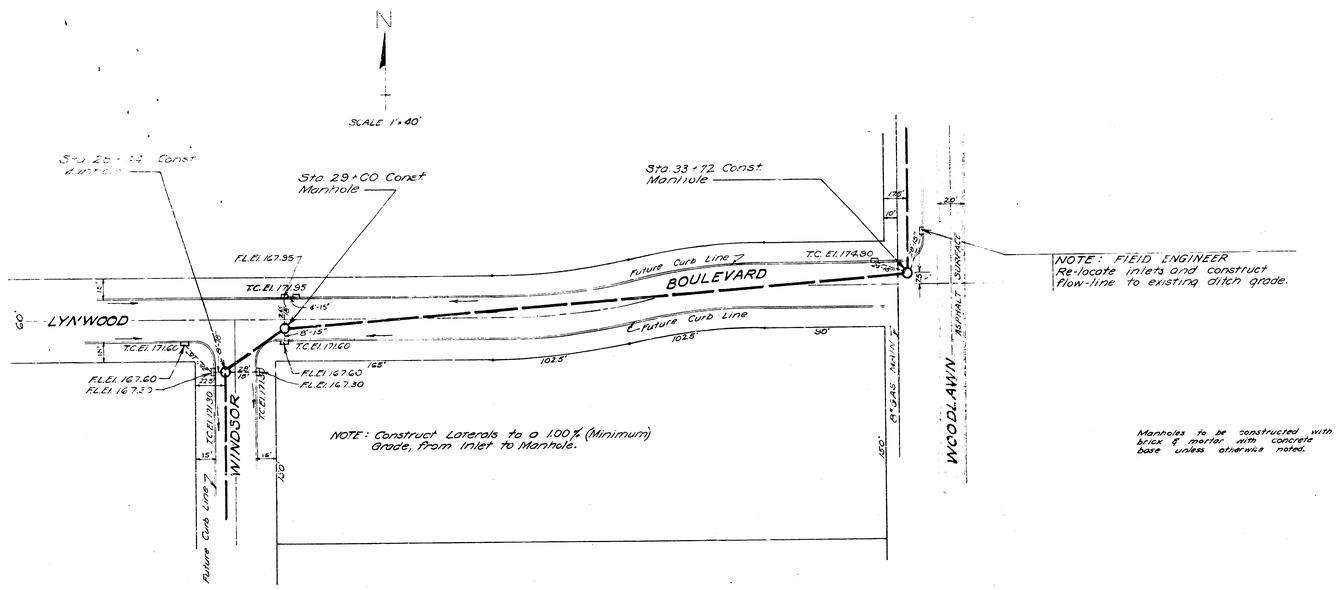

NOTE:- Sand backfill trench from Sta. 29+00 to Sta. 33+72 and all cross street laterals between curb lines.

Date
Drawn By J.L.A.
Checked By
Note Book No. M25

STORM WATER SEWER DIST. NO. 45
CITY OF WICHITA KANSAS
L.K. WHITE CITY ENGINEER
Proj. No. C 22-21
MARCH 1, 1952

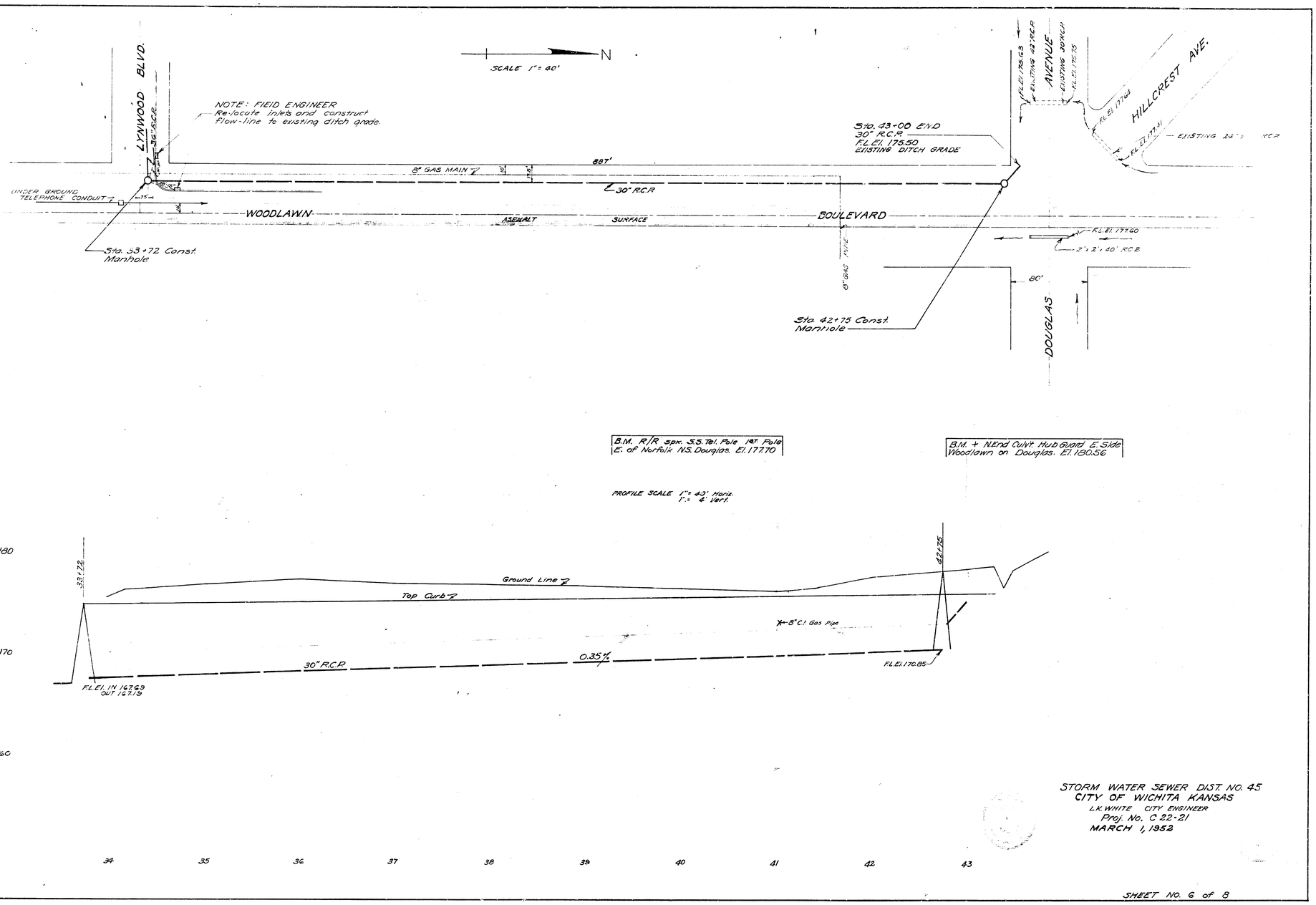

Date
Drawn by J.L.A
Checked by
Note Book No. M 25 C.H.M. 74

STORM WATER SEWER DIST. NO. 45
CITY OF WICHITA KANSAS
L.K. WHITE CITY ENGINEER
Proj. No. C 22-21
MARCH 1, 1952

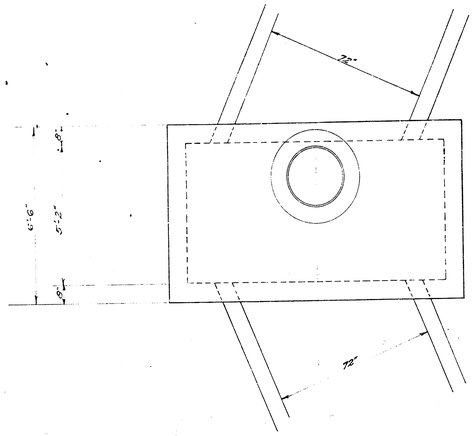

PLAN VIEW

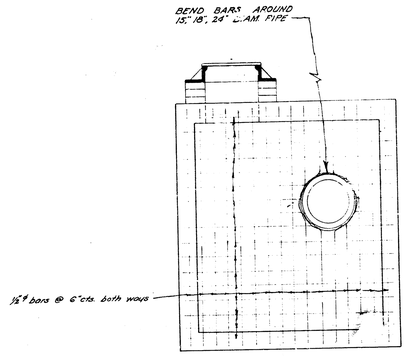

TYPICAL WALL SEC.
STEEL PATTERN

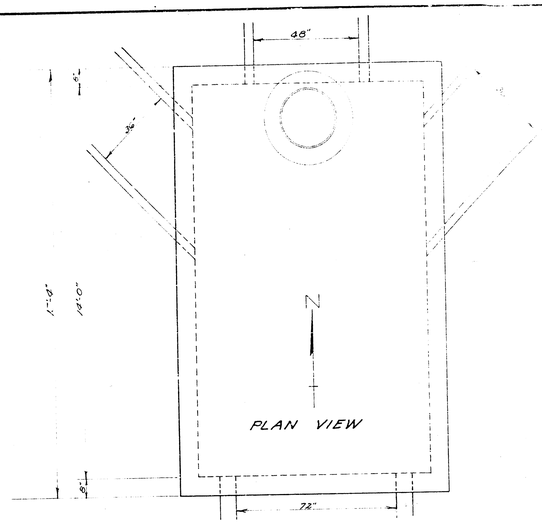

PLAN VIEW

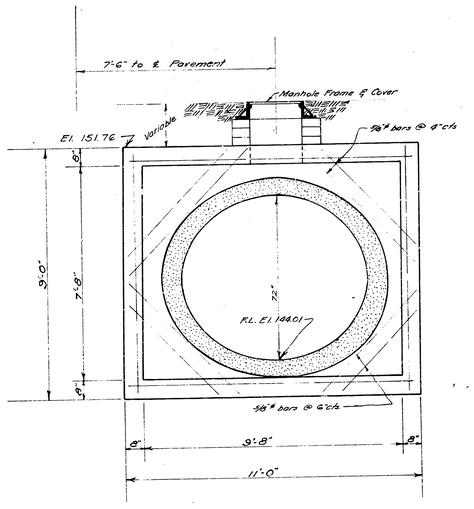

ELEVATION

REINF. CONC. MANHOLE DETAIL
Sta. 2+63 Line 1
Scale ½"=1.0'

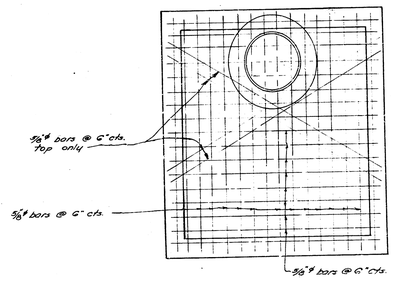

TYPICAL SEC. TOP & BOTTOM
STEEL PATTERN
No Scale

Concrete for manholes shall contain not less than 1.65 bbls. of cement per cu.yd of conc. In no event shall the total water content exceed 6.25 gals. per sack of cement. The mixture of fine and coarse aggregate shall be such as will produce a maximum density and the most workable mixture.

IN GENERAL: Pipes will enter and leave the manhole at various angles and elevations. Where possible bend reinforcing bars around pipes. Where pipes are large, use ⅝" diagonal bars as shown.

The floor of the manhole is to be shaped for flow and drainage with conc. No deductions in conc quantities shall be made for pipe openings. No addition in conc. quantities shall be made for shaping manhole floor.

An internal viberator is to be used for placing concrete.

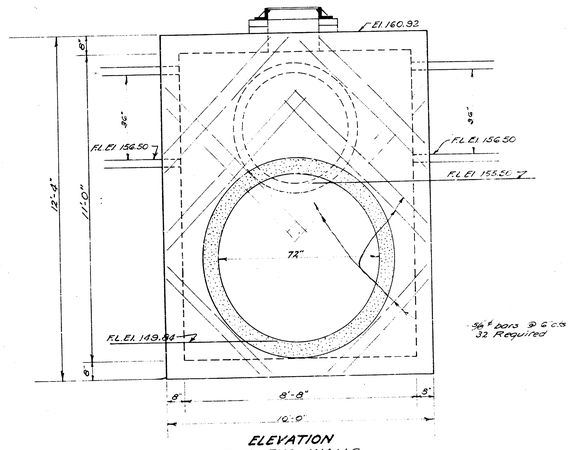

ELEVATION
TWO END WALLS

REINF. CONC. MANHOLE Sta. 12+35 Line 1
Sta. 0+00 " 2

Scale ½"=1.0'

STORM WATER SEWER DIST. NO. 45
CITY OF WICHITA KANSAS
L.K. WHITE CITY ENGINEER
Proj. No. C 22-21
MARCH 1, 1952

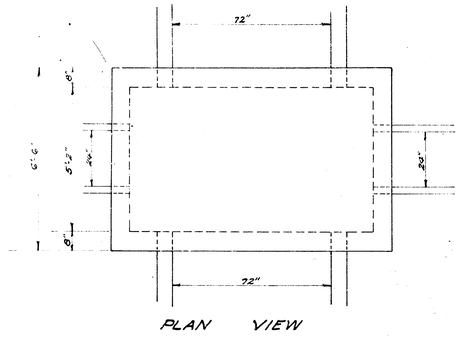

PLAN VIEW

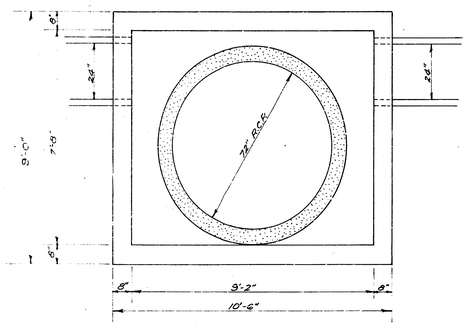

ELEVATION
TWO END WALLS

REINF. CONC. MANHOLE DETAIL
Sta. 5+78 Line 1
Sta. 8+48 " 1

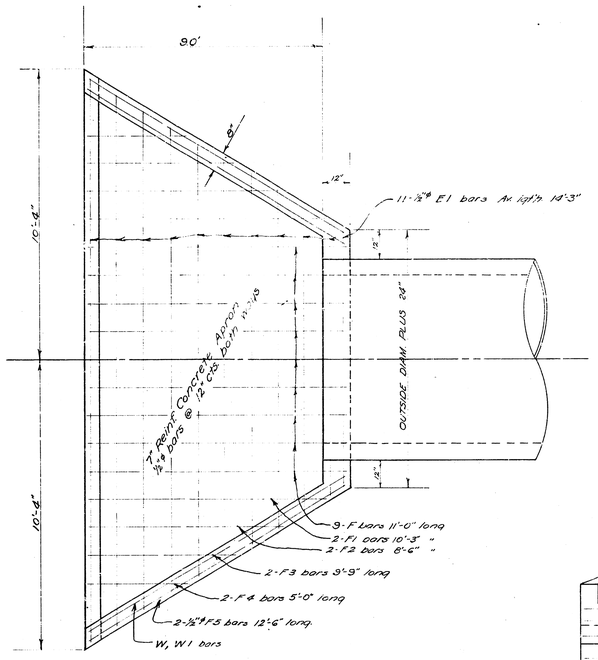

PLAN VIEW

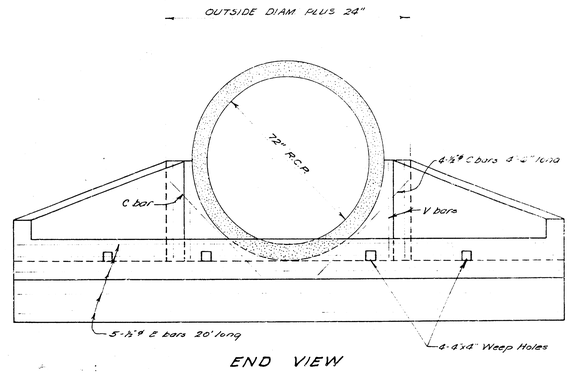

END VIEW

OUTFALL STRUCTURE
SCALE ½" = 1'

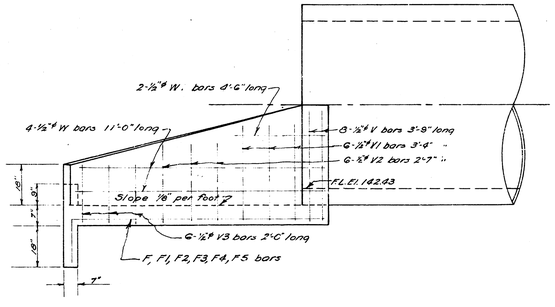

ELEVATION

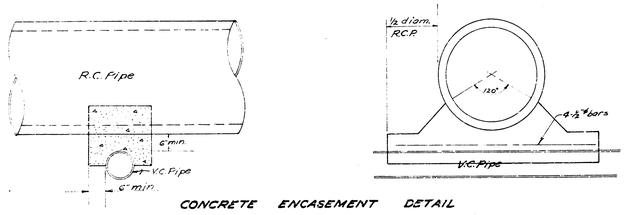

CONCRETE ENCASEMENT DETAIL
No Scale

STORM WATER SEWER DIST. NO. 45
CITY OF WICHITA KANSAS
I.K. WHITE CITY ENGINEER
Proj. No. C.22-21
MARCH 1, 1952.

SHEET NO. 8 of 8