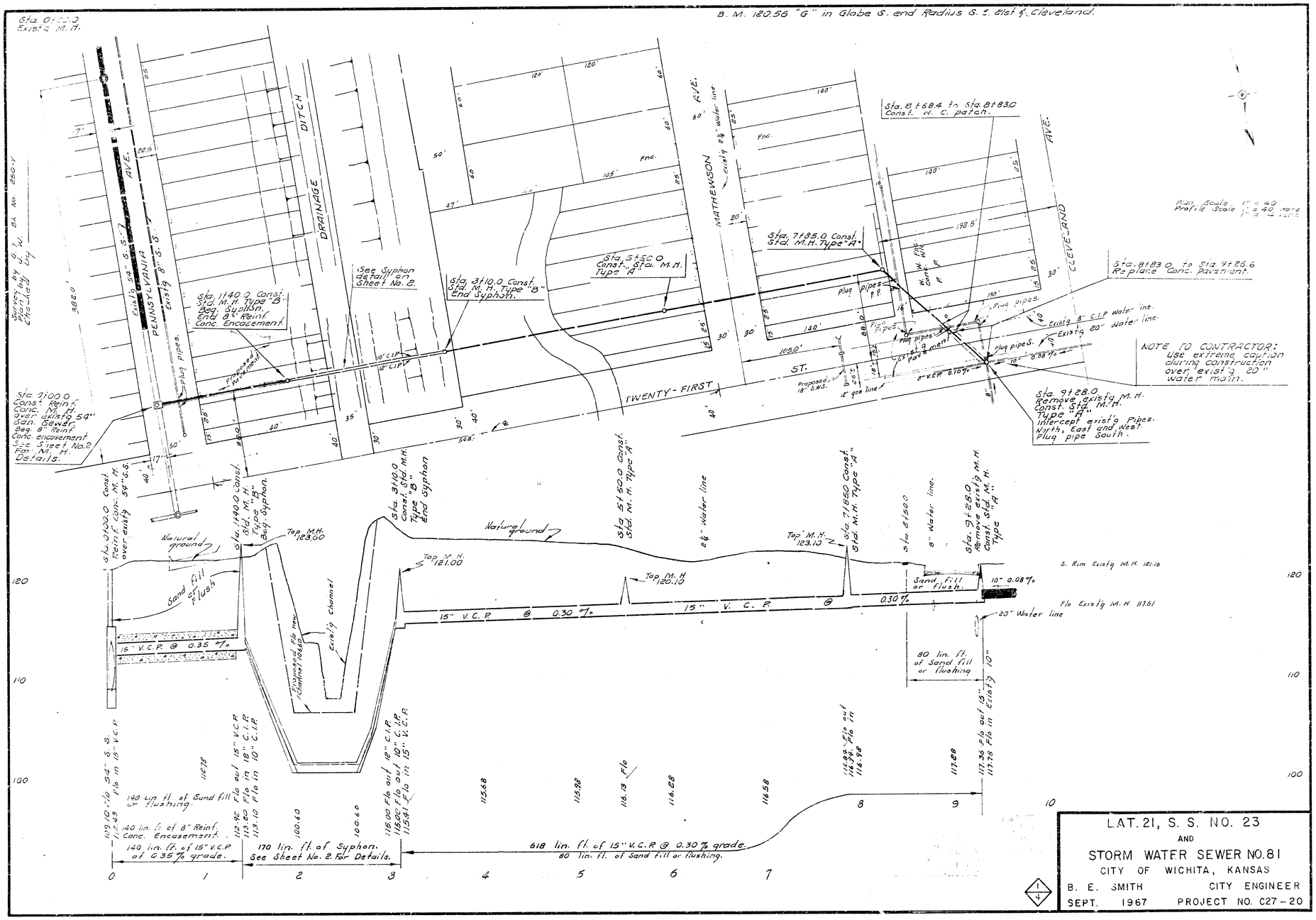
B. M. 120.56 "G" in Globe S. end Radius S. E. 61st & Cleveland.
Sta. 0+00.0 Exist'g M. H.
PENNSYLVANIA AVE.
Exist'g 54" S. S.
Exist'g 8" S. S.
Exist'g Sewer Ea. No. 2504-Y
Exist'g M. H. Flow Line
DITCH
DRAINAGE
MATHEWSON AVE.
Exist'g 8" Water line
CLEVELAND AVE.
TWENTY-FIRST ST.
Sta. 0+00.0 Const. Reinf. Conc. M. H. over exist'g 54" San. Sewer. Beg. 8" Reinf. Conc. encasement See Sheet No. 2 for M. H. Details.
Sta. 1+40.0 Const. Std. M. H. Type "B" Beg. Syphon. Ent'g 8" Reinf. Conc. Encasement.
See Syphon detail on Sheet No. 2.
Sta. 3+10.0 Const. Std. M. H. Type "B" End Syphon.
Sta. 5+52.0 Const. Std. M. H. Type "A"
Sta. 7+85.0 Const. Std. M. H. Type "A"
Sta. 8+68.4 to Sta. 8+83.0 Const. M. C. patch.
Sta. 8+83.0 to Sta. 9+26.6 Re place Conc. Pavement.
Plan Scale 1" = 40'
Profile Scale 1" = 40' Horiz. 1" = 4' Vert.
Plug pipes.
Existing 8" C.I.P water line.
Existing 20" Water line.
Proposed 18" S.W.S.
12" gas line
Existing gas main
NOTE TO CONTRACTOR: Use extreme caution during construction over exist'g 20" water main.
Sta. 9+28.0 Remove exist'g M. H. Const. Std. M. H. Type "A" Intercept exist'g Pipes. North, East and West. Plug pipe South.
Sta. 0+00.0 Const. Reinf. Conc. M. H. over exist'g 54" San. Sewer. Beg. 8" Reinf. Conc. encasement See Sheet No. 2 for M. H. Details.
Sta. 1+40.0 Const. Std. M. H. Type "B" Beg. Syphon.
Sta. 3+10.0 Const. Std. M. H. Type "B" End Syphon.
Sta. 5+52.0 Const. Std. M. H. Type "A"
Sta. 7+85.0 Const. Std. M. H. Type "A"
Sta. 8+68.4
Sta. 8+83.0
Sta. 9+28.0 Remove exist'g M. H. Const. Std. M. H. Type "A"
Natural ground
Top M. H. 123.00
Top M. H. 121.00
Top M. H. 120.10
Top M. H. 123.10
Sand fill or flush
15" V. C. P @ 0.35 %
15" V. C. P @ 0.30 %
10" 0.08 %
Flo Exist'g M. H. 117.61
20" Water line
S. Rim Exist'g M. H. 121.16
Flow Line of Exist'g Channel
Exist'g Channel
80 lin. ft. of Sand fill or flushing
140 lin. ft. of Sand fill or flushing.
140 lin. ft. of 8" Reinf. Conc. Encasement.
140 lin. ft. of 15" V.C.P at 0.35 % grade.
170 lin. ft. of Syphon. See Sheet No. 2 for Details.
618 lin. ft. of 15" V.C.R @ 0.30 % grade.
80 lin. ft. of Sand fill or flushing.
LAT. 21, S. S. NO. 23
AND
STORM WATER SEWER NO. 81
CITY OF WICHITA, KANSAS
B. E. SMITH CITY ENGINEER
SEPT. 1967 PROJECT NO. C27-20

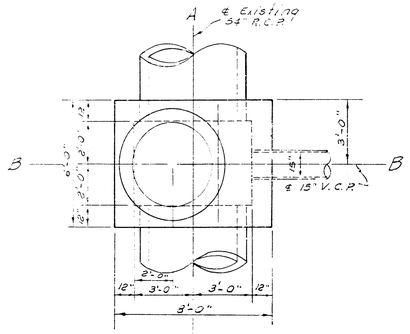

PLAN

Scale: 3/8" = 1'-0"

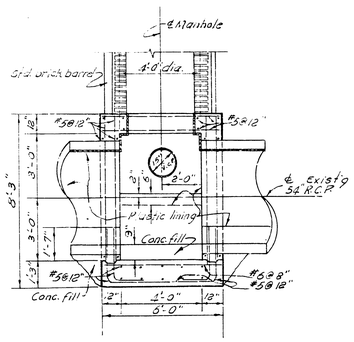

SECTION A-A

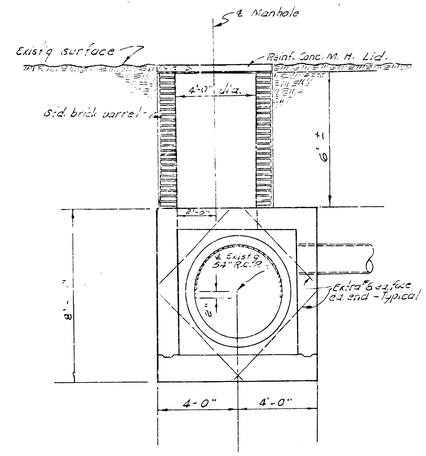

SECTION B-B

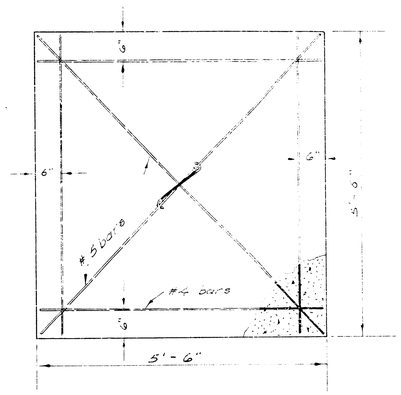

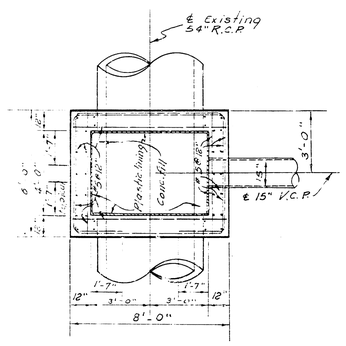

SECTIONAL PLAN

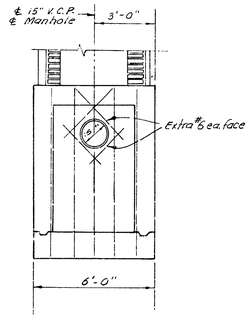

SECTION

Scale: 3/8" = 1'-0"

REINF. CONC. MANHOLE

Sta. 0+00.0

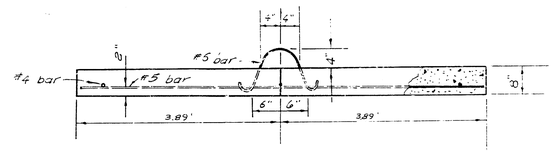

REINF. CONCRETE M. H. LID

Scale 1" = 1'-0"

LAT. 21, S. S. NO. 23
AND
STORM WATER SEWER NO. 81
PROJECT NO. C 27-20

2/4

PLAN
M. H. STATION 1+40.0
Type "B"

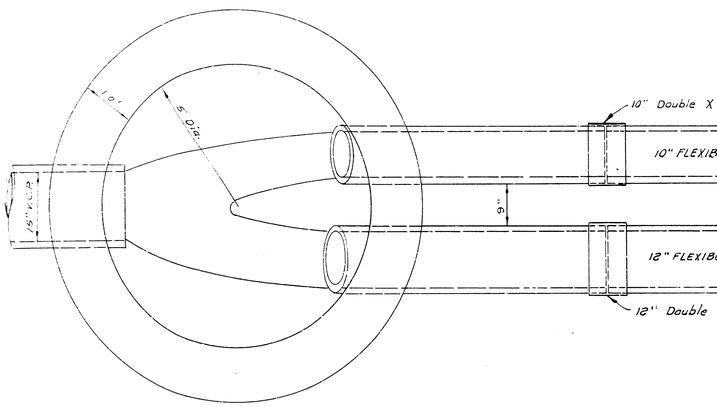

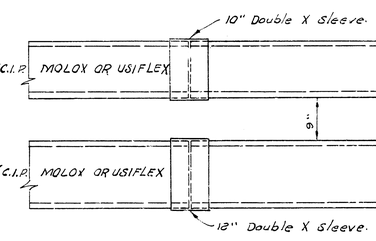

PLAN
M. H. STATION 3+10.0
Type "B"

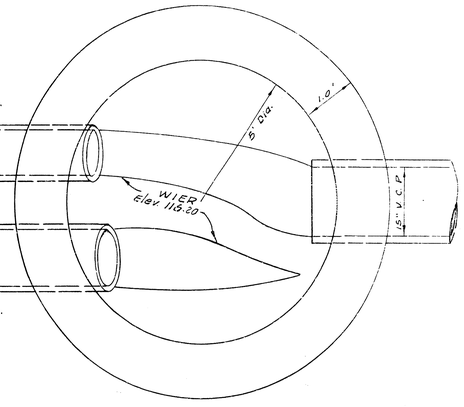

Plan Scale 1" = 1'
Profile Scale 1" = 8' Horz.
1" = 8' Vert.

1 P.E.-P.E. 12"x 9' (C. I.)
1 P.E.-P.E. 10"x 7' (C. I.)
1 P.E.-P.E. 12"x 8' (C. I.)
1 Ball-P.E. 10"x 9' (C. I.)
1 Ball-P.E. 12"x16' Flexible Joint C.I.P. Molox or Usiflex.
1 Ball-P.E. 10"x 18' " " " " " "
1 Ball-P.E. 12"x 8' " " " " " "
1 P.E.-P.E. 10"x 9' " " " " " "
8 Ball-Ball 12"x 16' " " " " " "
7 Ball-Ball 10"x 18' " " " " " "
2-10" Double X Sleeves.
2-12" " " " " "

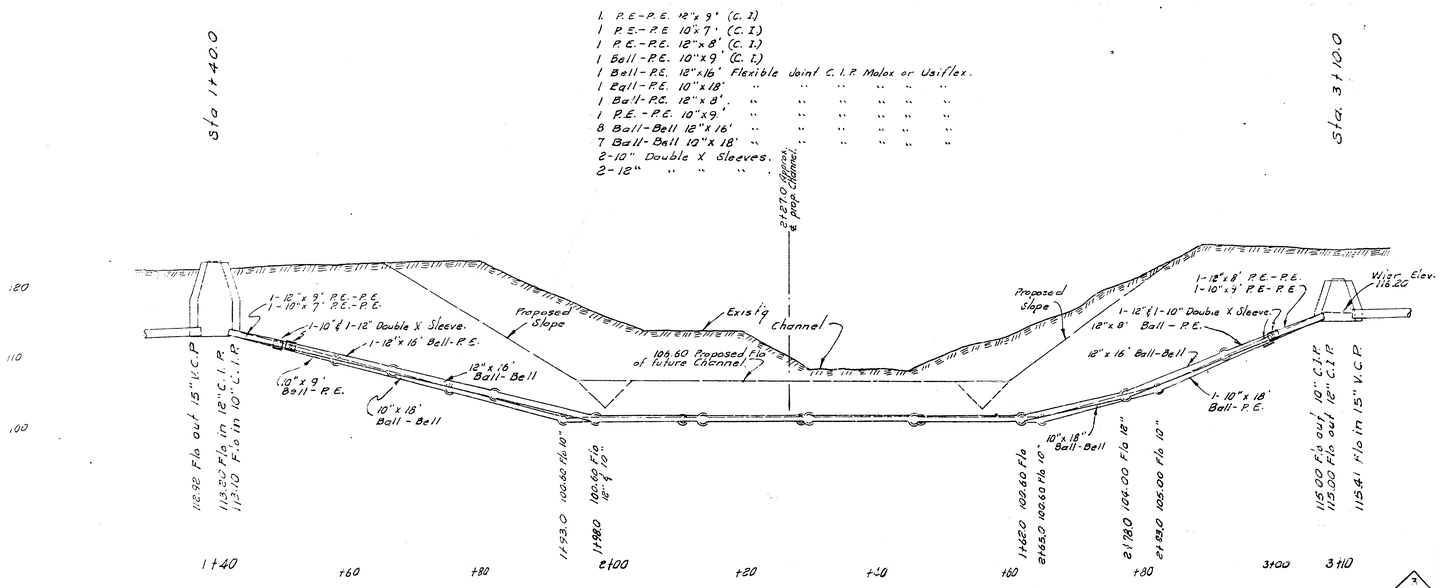

LAT. 21, S. S. NO. 23
AND
STORM WATER SEWER NO. 81
PROJECT NO. C27-20

3/4

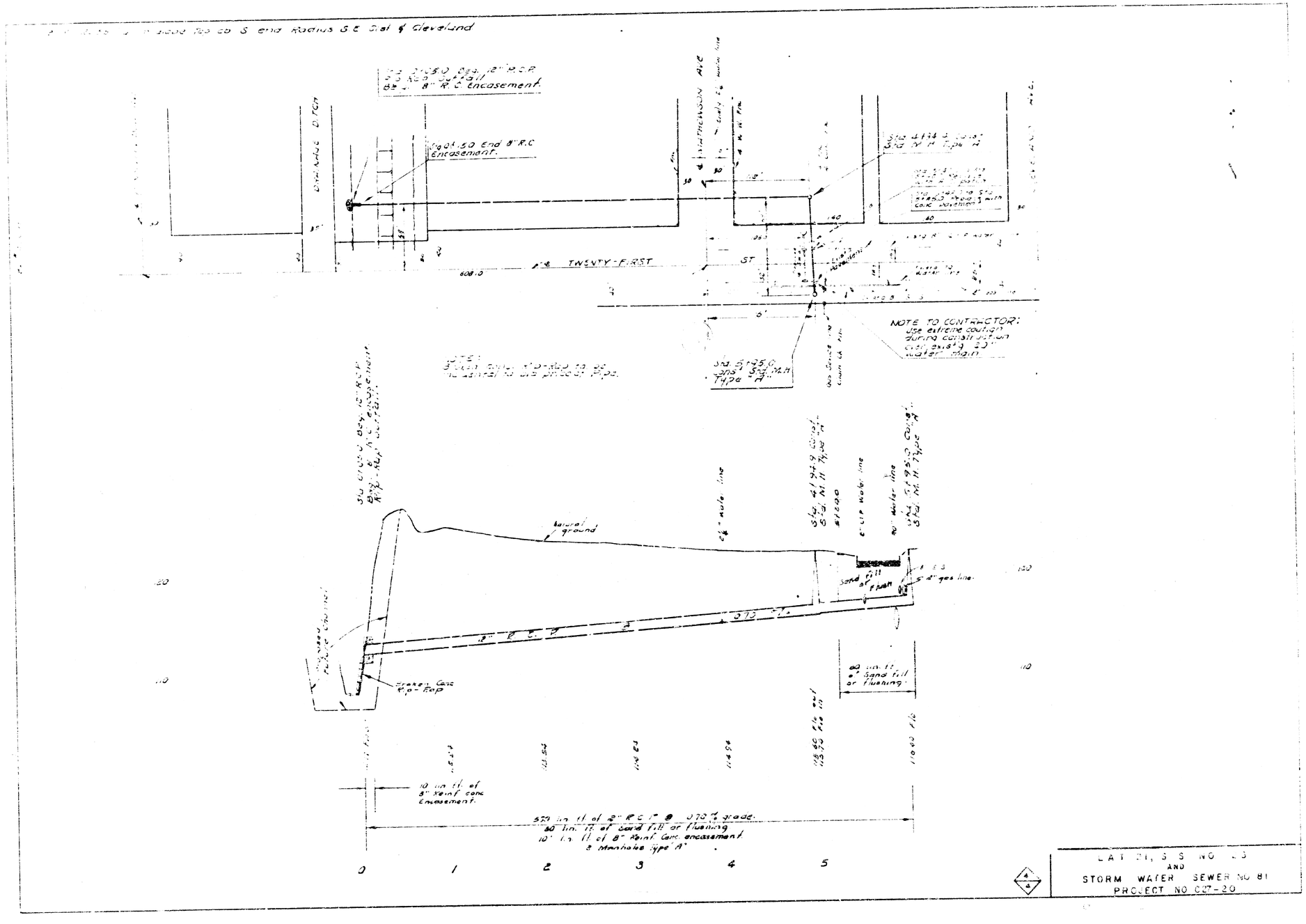

LAT 21, S S NO 23
AND
STORM WATER SEWER NO 81
PROJECT NO C27-20