PLAN AND PROFILE FOR

# STORM WATER SEWER NO. 87

CITY OF WICHITA, KANSAS

B. E. SMITH — CITY ENGINEER

PROJECT NO. C28-96

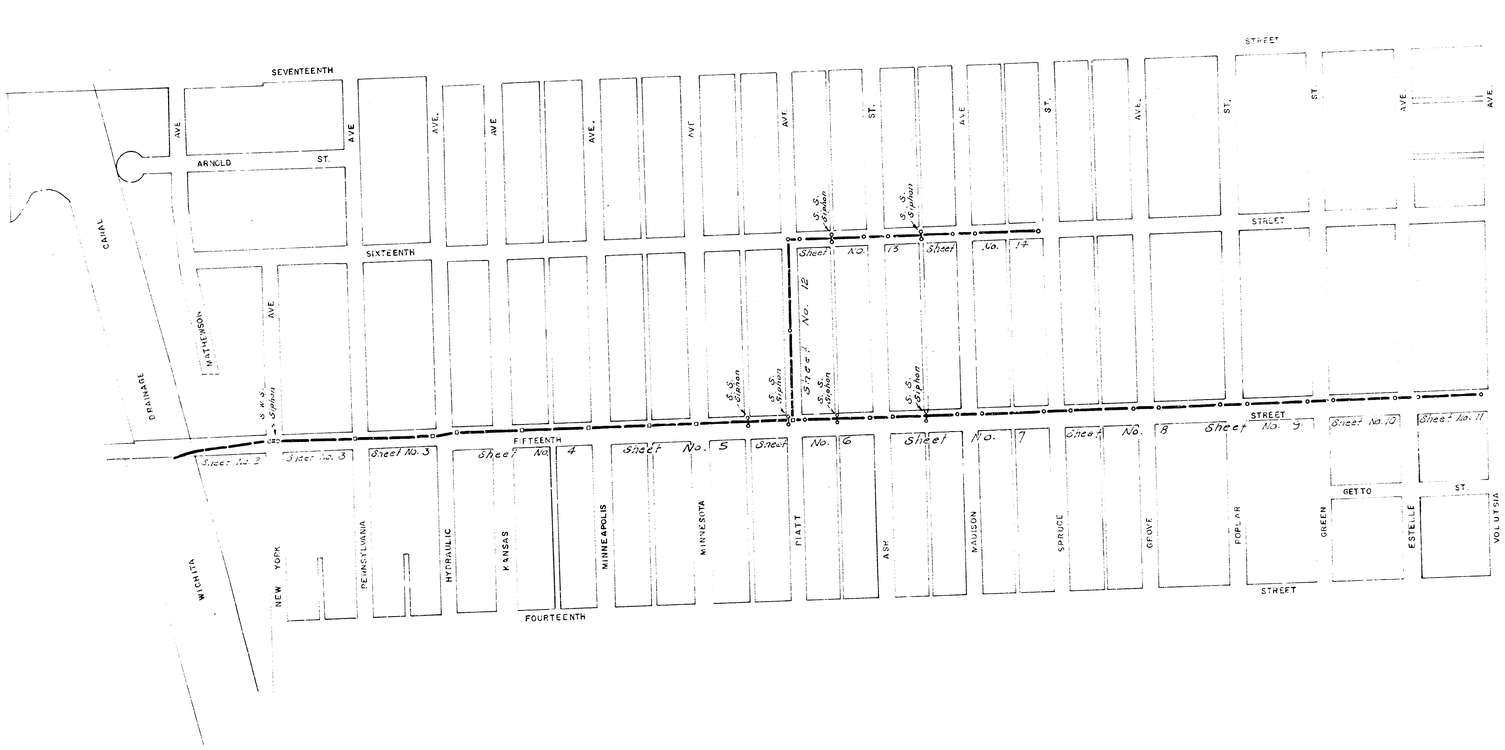


STORM WATER SEWER NO. 87 | 1 / 19

NOV. 1965 PROJECT NO. C28-96

B. M. 120.95 "K" cut on S. E. end of wing on S.E. cor. canal Bridge on 15th St.

B. M. 118.21 R. R. Spike, N. Side Elm tree on S.W. cor. 15th St. & New York.

Sta. 0+95.0 R. I.
Install 2 - 2½° Joints of 48" R. C. Radius pipe to const. a 18°-20° deflection.

CANAL

DRAINAGE

NOTE: Replace Rip-rap.

Sta. 0+20 ± Beg. Proj. Ext. 48" R.C.P. Beg. Reinf. Conc. Encasement.

Field Engineer to locate end of 48" R.C.P. to match existing slope of canal bank.

Rip-rap outfall and around end of pipe with broken concrete.

Rip-rap is to be incidental to the project.

Future bridge piers.

WICHITA

INTERSTATE 35 W

FIFTEENTH STREET

Exist. 4" gas main

Exist. 6" C.I. Water Line

Sta. 3+76.0 Const. Reinf. Conc. R.C.P. with brick stack. Beg. Sigmon Ave. Sheet No. 15 for detail.

Sta. 3+91.03

Sta. 1+91.90.5

NEW YORK AVE.

60'

NOTE: See sheet No. 15 for general notes.

NOTE: Mechanically compact backfill to be incidental to the project.

Sta. 0+22 ± Beg. Proj. Ext.

Mechanically compact backfill.

Sta. 0+50.0

Sta. 0+95.0 R. I. Install 2 - 2½° Joints of 48" R. C. Radius pipe to const. a 18°-20° deflection

WICHITA DRAINAGE CANAL

Rip-rap outfall and around end of pipe with broken Concrete

Natural ground

LINE NO. 1

48" R. C. P. @ 0.24 %

48" R. C. P. @ 0.24 %

48" R.C.P. @ 0.22 %

10 lin. ft. of reinf. Conc. encasement.

Sta. 3+76.0 Const. Reinf. Conc. R.C.P. with brick stack. Beg. Sigmon Ave. Sheet No. 15 for detail.

Sta. 1+30.0 Const. Reinf. Conc. R.C.P. with brick stack. End Sigmon Ave. Sheet No. 15 for detail.

Sta. 1+20 Exist. San Sewer.

Sta. 1+42.5 Exist. 8" water line

Sta. 1+00

Exist. Pavement

2 - 30" R.C.P.

2-30" R.C.P.

1.31.10

104.30 ± Out

104.99

105.23

105.47

105.70

106.20

106.35

376 lin. ft. of 48" R.C.P. @ 0.24 % grade.

70 lin. ft. of 48" R.C.P. @ 0.22 %

0 1 2 3 4 5

STORM WATER SEWER NO. 87
PROJECT NO. 028-96

2/19

B. M. ... 7.22 R. R. Spike N. Side P. Pole on S. W. cor. 15th St. & Pennsylvania.

NOTE:
The contractor is to remove the minimum amount of pavement on this project.

N

AVE.

30'

9'

8" water line

T.C. 116.81

Sta. 3+50 3.70 Sta. 3+52 3.70

15" R.C.P.

Sta. 3+52 113.43

Sta. 3+52 112.83

8" water line

T.C. 116.80

8" C.I. main

8" water line

97'

6'

FIFTHTEENTH STREET

16'

Iron in thimble 7+81.51

Sta. 7+25.6 Const. Reinf. Conc. M.H. with brick stack. See sheet No. 16 for details.

330' P

330' P

NEW YORK

PENNSYLVANIA

30'

30'

115.39

Sta. 9+87.0

See sheet No. 16 for details

NOTE:
Take ties to iron in thimble 2.70 to replace.

Sta. 5+00.0

Exist. Conc. Pavement

Sta. 6+21.0 Exist. 8" Water line

Sta. 7+25.6 Const. Reinf. conc. M.H. with brick stack. See sheet No. 16 for details.

Sta. 7+46.5 Exist. 8" C.I. main

Sta. 8+87.0 Exist. 8" San. Sewer.

Exist. Conc. pavement

Sta. 10+49.6 Const. Reinf. conc. M.H. with brick stack. See sheet No. 16 for details.

120

110

100

LINE NO. 1

48" R.C.P. @ 0.22 % 48" R.C.P. @ 0.22 % 48" R.C.P. @ 0.22 %

LINE NO. 1

100.35 106.57 106.79 106.85 Flo 107.01 113.35 Flo Exist. 8" San. Sewer 107.23 107.45 107.61 Flo

524.6 lin. ft. of 48" R.C.P. @ 0.22 % grade.

5 6 7 8 9 10

STORM WATER SEWER NO. 87
PROJECT NO. 028-96

3/19

B.M. Y = 135 Std. 5+4 on N.E. cor. 17th St. & Hydraulic.

B.M. X = 0.03 W.S. 60.48 E. 5 Side white Elm tree on S.E. cor. 18th St. & Hydraulic.

N

Sta. 11+03.0 Const. reinf. conc. M.H. with brick stack. See sheet No. 13 for details.

Sta. 11+06.6 Const. 8"x8" Wye in 8" V.C.P. sewer.

Sta. 11+08.6 Const. 8" V.C.P. sewer.

Sta. 11+10.6 Const. 10"x10"x8" tee in 8" V.C.P. sewer.

Sta. 11+14.5 Exist. 8" C.I. Water line

Sta. 11+03.0 Const. reinf. conc. M.H. with brick stack. See sheet No. 16 for details. Exist. 4" W.P. Gas line

Sta. 11+64.5 Exist. 8" San. sewer.

Sta. 13+25.6 Const. reinf. conc. M.H. with brick stack. See sheet No. 17 for details.

Sta. 14+13.6 Const. reinf. conc. M.H. with brick stack. See sheet No. 17 for details. 8" W.P. Water Exist.

Natural ground

LINE NO. 1

48" R.C.P. @ 0.22 % | 48" R.C.P. @ 0.22 % | 48" R.C.P. @ 0.22 %

589 lin. ft. of 48" R.C.P. @ 0.22% grade

108.05 F/G | 107.68 F/G | 107.46 Exist. 8" S.S. F/G | 107.39 | 108.11 | 108.17 F/G | 108.33 | 108.55 | 108.77 | 108.40 F/G

11 | 12 | 13 | 14 | 15 | 16

Revised 10-26-49

STORM WATER SEWER NO. 87
PROJECT NO. C28-96

4/19

B. M. 7.39 R.R. Spike in S. side large elm tree on S.W. cor. 15th St. and Minneapolis.

B. M. 11.20 R.R. Spike in S. side large elm tree on S.E. cor. 15th & Minnesota.

N

FIFTEENTH STREET

Sta. 18+37.40 const. reinf. conc. M.H. over exist'g 9" San. Sewer. See sheet No. 17 for details.

Sta. 19+00 const. reinf. conc. M.H. See sheet No. 15 for details.

MINNEAPOLIS AVE.

MINNESOTA AVE.

20' ALLEY

Sta. 18+13.60

Sta. 16+96.6 Exist. 8" Water line

Natural ground

LINE NO. 1

48" R.C.P. @ 0.22 %

48" R.C.P. @ 0.22 %

42" R.C.P. @ 0.36%

Sta. 18+37.4 const. reinf. conc. M.H. over exist. 8" S.S. See sheet No. 17 For details.

Sta. 19+94.6 Exist. 8" Water line

Sta. 19+98.6 const. reinf. conc. M.H. See sheet No. 18 for details.

Sta. 22+00.0

108.45 Flo out 48"
110.15 Flo in 42"

385 lin. ft of 48" R.C.P. @ 0.22% grade

2017 lin. ft. of 42" R.C.P. @ 0.36% grade

| STORM WATER SEWER NO. 87 | 5 |
|---|---|
| PROJECT NO. 028-96 | 19 |

B.M. No. 119.70 R.R. Spike S. Side Large Elm tree and tree 2' or 3' off on N. Side of 18th St.

N

Sta. 22+00.0

20' ALLEY

Sta. 22+08.6 const. Siphon on ex. 8" San. Sewer. See sheet No. 18 for details.

Sta. 23+60.7 const. Siphon on ex. 8" 18" San. Sewer. See sheet No. 18 for details.

FIFTEENTH STREET

PIATT AVE.

Sta. 23+88.6 Plan Intersection

Sta. 24+20.6 Const. Std. M. H. Type "A" 5' Dia. and 8" wall. Use wide flange M.H. casting

Sta. 23+81.6 const. reinf. conc. M. H. See sheet No. 19 for details. Sta. 0+00.0 for Line No. 2 north.

T.C. 1159

Sta. 0+00.0 for Line No. 2 North

Sta. 25+53.4 const. Siphon on ex. 8" S. S. See sheet No. 18 for details.

12' ALLEY

Sta. 26+97.6 Const. Std. M. H. Type "A" 5' dia. and 8" wall Use wide flange M.H. casting

ASH STREET

Sta. 27+53.3 Const. Std. M. H. Type "A" 5' dia. and 8" wall Use wide flange M.H. casting

Draw = 3'-4½" on 5' dia. M.H.
Draw = 1'-4½" on 4' dia. M.H.

TYPICAL
Wide flange M.H. casting
No. 500 A8 - 22

3/8" = 1'-00"

NOTE:
Make draw at top of manholes less than 40" when possible.

Remove

Sta. 22+00.0

Sta. 22+08.6 const. Siphon on ex. 8" San. Sewer. See sheet No. 18 for details.

Sta. 23+60.7 const. Siphon on ex. 18" San. Sewer. See sheet No. 18 for details.

Sta. 23+76.6 Ex. 8" Water line.

Sta. 23+81.6 const. M. H. See sheet No. 19 for details. Sta. 0+00.0 Line No. 2 N.

Sta. 24+12.6 Ex. Gas line.

Sta. 24+20.6 const. Std. M. H. Type "A" 5' dia. and 8" wall Use wide flange M.H. casting

NOTE: Beg. draw 4.0' below Surface.

Sta. 25+53.10 Const. Siphon on ex. 8" S. S. See sheet No. 18 for details.

Sta. 26+97.6 const. Std. M. H. Type "A" 5' dia. and 8" wall Use wide flange M.H. casting

NOTE: Beg. draw 4.0' below Surface.

Sta. 27+53.6 const. Std. M. H. Type "A" 5' dia. and 8" wall Use wide flange M.H. casting

Natural ground

LINE NO. 1

42" R.C.P @ 0.36 %

36" R.C.P @ 0.26 %

36" R.C.P @ 0.26 %

120

110

| | | |

Sta. 28+86.0 const. siphon on exist. 8" San. Sewer. See Sheet No. 19 for details.

Sta. 28+86.0 const. Siphon on exist. 8" S. S. See sheet No. 19 for details.

Sta. 30+14.6 const. Std. M. H. Type "A" 5' dia. and 8" wall Use wide flange M.H. casting

Sta. 30+14.6 const. Std. M. H. Type "A" 5' dia. and 8" wall Use wide flange M.H. casting

Sta. 30+95.6 const. Std. M. H. Type "A" 5' dia. and 8" wall Use wide flange M.H. casting

Sta. 30+95.6 const. Std. M. H. Type "A" 5' dia. and 8" wall Use wide flange M.H. casting

Sta. 30+95.10 const. Std. M. H. Type "A" 5' dia. & 8" wall Use wide flange M.H. casting

Sta. 33+30.0 const. Std. M.H. Type "A" 5' dia. and 8" wall Use wide flange M.H. casting

Sta. 33+30.0 const. Std. M.H. Type "A" 5' dia. & 8" wall Use wide flange M.H. casting

Sta. 30+14.6 const. Std. M.H. Type "A" 5' dia. and 8" wall Use wide flange M.H. casting

Sta. 30+95.10 const. Std. M. H. Type "A" 5' dia. & 8" wall Use wide flange M.H. casting

Sta. 33+30.0 const. Std. M.H. Type "A" 5' dia. & 8" wall Use wide flange M.H. casting

Sta. 28+86.0 const. Siphon on exist. 8" S. S. See sheet No. 19 for details.

Sta. 30+14.6 const. Std. M.H. Type "A" 5' dia. and 8" wall Use wide flange M.H. casting

Sta. 30+95.10 const. Std. M. H. Type "A" 5' dia. & 8" wall Use wide flange M.H. casting

Sta. 33+30.0 const. Std. M.H. Type "A" 5' dia. & 8" wall Use wide flange M.H. casting

Sta. 33+17.5 Exist. 8" S.S.

Sta. 30+14.6 const. Std. M.H. Type "A" 5' dia. and 8" wall Use wide flange M.H. casting

Sta. 30+95.10 const. Std. M. H. Type "A" 5' dia. & 8" wall Use wide flange M.H. casting

Sta. 33+30.0 const. Std. M.

B. M. 120.33 R.R. Spike N. side P. Pole on S. W. cor. 15th St. & Spruce.

B. M. 122.31 "a" cut on brk. W.K. cast on S. E. cor. 15th St. & Grove.

N

Sta. 34+69.6 const. Std. M.H. Type "A" 5' dia. and "B" wall. Use wide flange casting

Sta. 37+45.6 const. Std. M.H. Type "A" 5' dia. and "B" wall. Use wide flange casting

Sta. 34+26.6 const. Std. M.H. Type "A" 5' dia. and "B" wall Use wide flange casting

SPRUCE AVE.

GROVE AVE.

11' ALLEY

FIFTEENTH STREET

Existing Pavm't

Sta. 33+50.0

Sta. 33+82.6 Iron in Manhole

Existing 8" Sewer line

Existing 3" Gas line

Existing 2" Water line

Existing 6" Water line

Existing 12" Gas line

Existing 3" Gas line

Existing 4" C. I. Water line

Existing 3" Cast Iron Tree

Existing 36" Poplar

Existing 11" Tree

Existing 30" Tree

T.C. 120.42

T.C. 121.0

T.C. 122.8

Fls in 4.79

Fls Jct 7.80

Fls Jct 8.30

Fls Jct 7.90

Fls Jct 8.00

8" - 15° R. C. P.

Fls Jct 8.00

Fls in 8.30

Fls Jct 8.20

Fls Jct 8.00

Existing M.H. Fls 13.58

Existing M.H. Fls 15.08

Reinforcing

PLAN
Sta. 37+46.6

Sta. 33+50.0

Sta. 33+82.6 Iron in Manhole

Sta. 34+26.6 Existing 2" Water line

Sta. 34+36.6 const. Std. M.H. Type "A" 5' dia. and "B" wall. Use wide flange casting

Sta. 35+32.5 Existing 8" S.S.

Sta. 36+69.6 const. Std. M.H. Type "A" 5' dia. and "B" wall. Use wide flange casting

Sta. 37+04.6 Existing 2" Water

Sta. 37+25.6 Existing 3" Gas line

Sta. 37+45.6 const. Std. M.H. Type "A" 5' dia. and "B" wall. Use wide flange casting

Sta. 39+85.5 Existing 8" S.S.

Sta. 39+00.0

Natural ground

LINE NO. 1

30" R. C. P. @ 0.46 %

30" R. C. P. @ 0.45 %

34" R. C. P. @ 0.90 %

Note:
Beg. draw 4.0' below Surface.

NOTE:
Beg. draw 4.0' below Surface.

120

110

115.83

115.93 F/o

116.29

116.75

117.07 F/s

117.21

117.42 F/o 30"
117.56 F/o 24"

118.40

118.30

395 lin. ft. of 30" R.C.P @ 0.46 % grade.

154.4 lin. ft. of 24" R.C.P @ 0.90 % grade.

34 35 36 37 38 39

STORM WATER SEWER NO. 87
PROJECT NO. C28-96

8/19

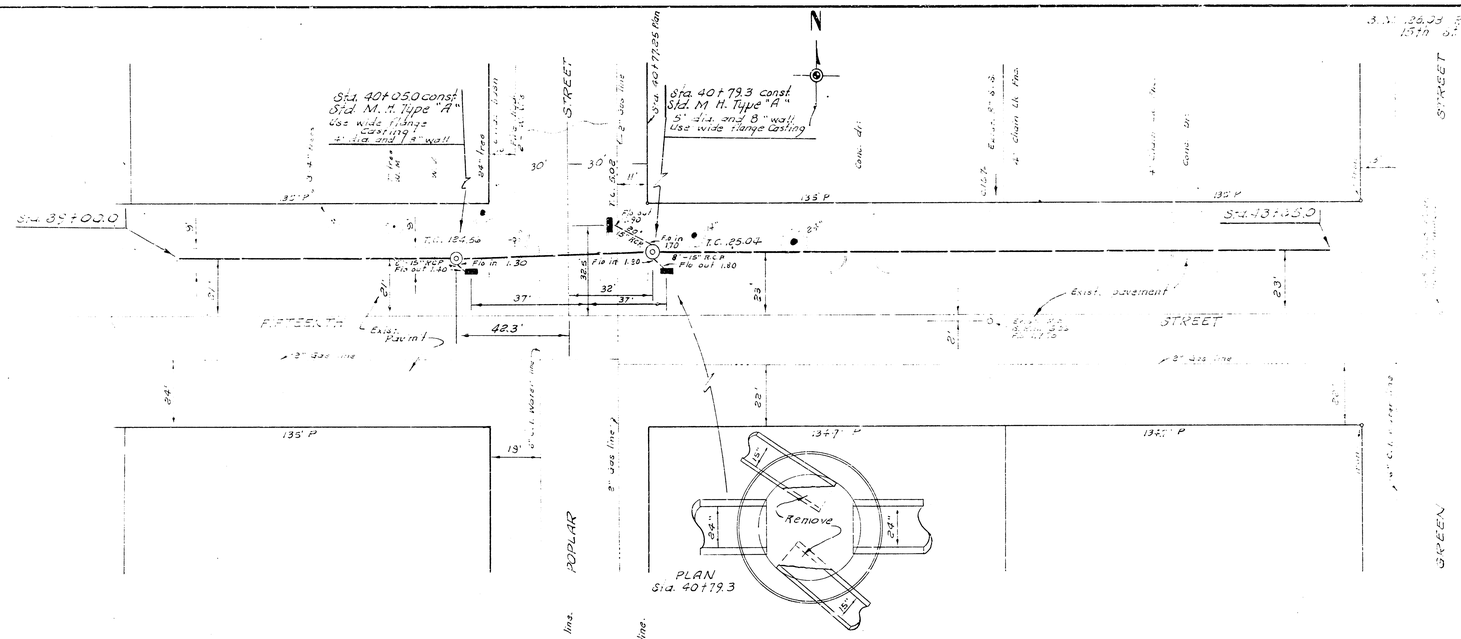


STORM WATER SEWER NO. 87
PROJECT NO. C28-96

9/19

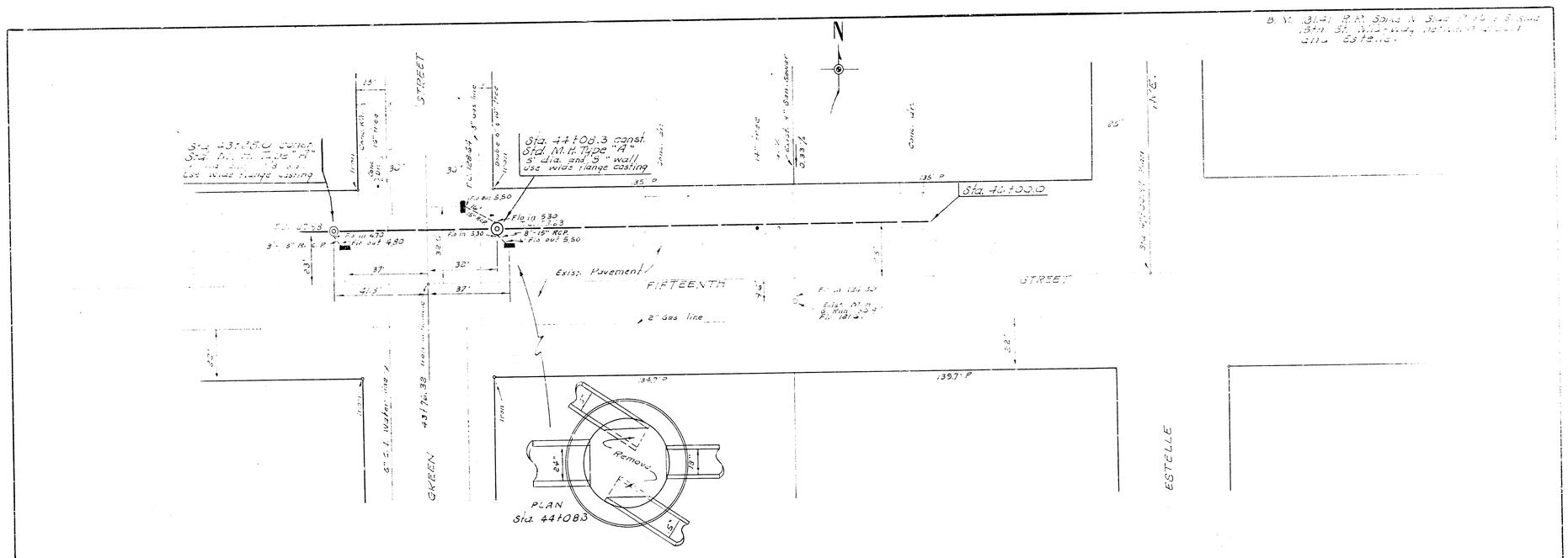


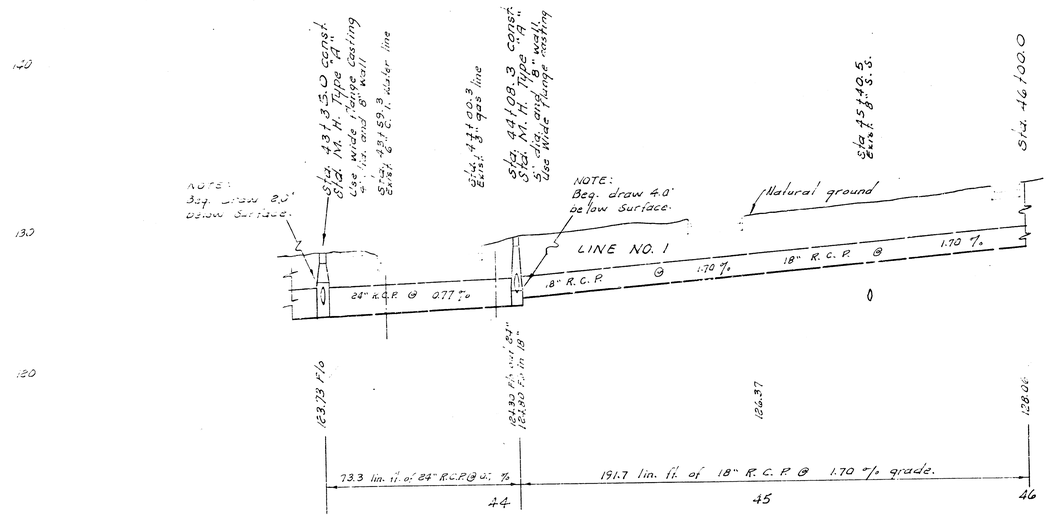


STORM WATER SEWER NO. 87
PROJECT NO. C25-96

10/19

B.M. 38 ft. R.R. 30 ft. S. Side Alley 7 Pts on S. W. Cor. Lot 17 & 18 Blk 4

Sta. 47+28.0 Const. Std. N. H. Type "A" 4' dia. and 8" wall Use wide flange casting.

Sta. 47+74.0 Const. Std. N. H. Type "A" Use wide flange casting 4' dia. and 8" wall

Sta. 49+95.0 Const. Std. N. H. Type "A" Use wide flange casting 4' dia. and 8" wall

N

FIFTEENTH

Exist. pavmt.

STREET

ESTELLE

VOLUTSIA

Sta. 46+00.0

3" water line

PLAN
Sta. 46+74.0 & Sta. 47+28.0
4' dia. and 8" wall

Sta. 46+00.0

NOTE: Beg. draw 8.0' below Surface.

4' dia. and 8" wall Use wide flange casting Std. N. H. Type "A"

Sta. 46+74.0 Const. 8" Sewer

Sta. 47+28.0 Const. Std. N. H. Type "A" Use wide flange casting 4' dia. and 8" wall

NOTE: Beg. draw 8.0' below Surface.

Natural ground

Sta. 48+11 Exist. 2" gas line

Sta. 48+73.0 Exist. 8" S.S.

Sta. 49+95.0 Const. Std. N. H. Type "A" 4' dia. and 8" wall Use wide flange casting.

LINE NO. 1

18" R. C. P. @ 1.70 % 15" R. C. P. @ 1.53 % 15" R. C. P. @ 1.53 %

128.07 | 129.32 F/o | 129.77 | 130.63 F/o 18" 131.50 F/o 15" | 131.60 | 133.13 | 134.59 F/o

128 lin. ft. of 18" R.C.P @ 1.70% grade. 267 lin. ft. of 15" R.C.P @ 1.53% grade.

46 47 48 49

STORM WATER SEWER NO. 87
PROJECT NO. C28-96

11/19

B. M. 118.70 X. R. Spike S. side large Elm tree, 2nd tree E. of Path on N. side 16th. St.

B. M. 118.68 "B" cut Bk. Wk. North on N.E. cor. 16th and Path.

N

Sta. 0+00.0 Line No. 2
Sta. 23+91.6 Line No. 1

Sta. 6+20.0 const. Std. M. H. Type "B" 5' inst., 12" wall Install wide flange M. H. casting.

Exist. 12" San. Sewer

633' P

T.C. 117.98

Exist. 8" A. C. Water line

21st T.

Exist. A.C. Pavement

Ave E.

Exist. A.C. Pavement

3" Gas line

633' P

42" tree W. M.

Conc. drive

W. M.

Conc. dr.

W. M.

Conc. dr.

28" tree

W. M.

Conc. dr.

28" tree

Conc. dr.

28" tree

6" mail tree

8" tree 3" Spruce 4" App. wks.

Conc. dr.

W. M.

FIFTEENTH

SIXTEENTH

Sta. 0+00.0 Line No. 2
Sta. 23+91.6 Line No. 1
Sta. 0+05.0 exist. 3" gas line

Sta. 3+60.0 const. Std. M. H. Type "B" 5' inst., 12" wall Install wide flange M. H. casting

Sta. 6+00.0

120

110

A. C. Pavement

LINE NO. 2

36" R. C. P. @ 0.12 % 36" R. C. P. @ 0.12 % 36" R. C. P. @ 0.12 % 36" R. C. P. @ 0.12 %

A. C. Pavement

LINE NO. 2

20

110

112.34 F/o 111

112.16

112.28

112.40

112.46 F/o

112.52

112.64

112.76

600 lin. ft. of 36" R. C. P. @ 0.12 % grade.

0 1 2 3 4 5 6

STORM WATER SEWER NO. 87
PROJECT NO. C 28-96

12/19

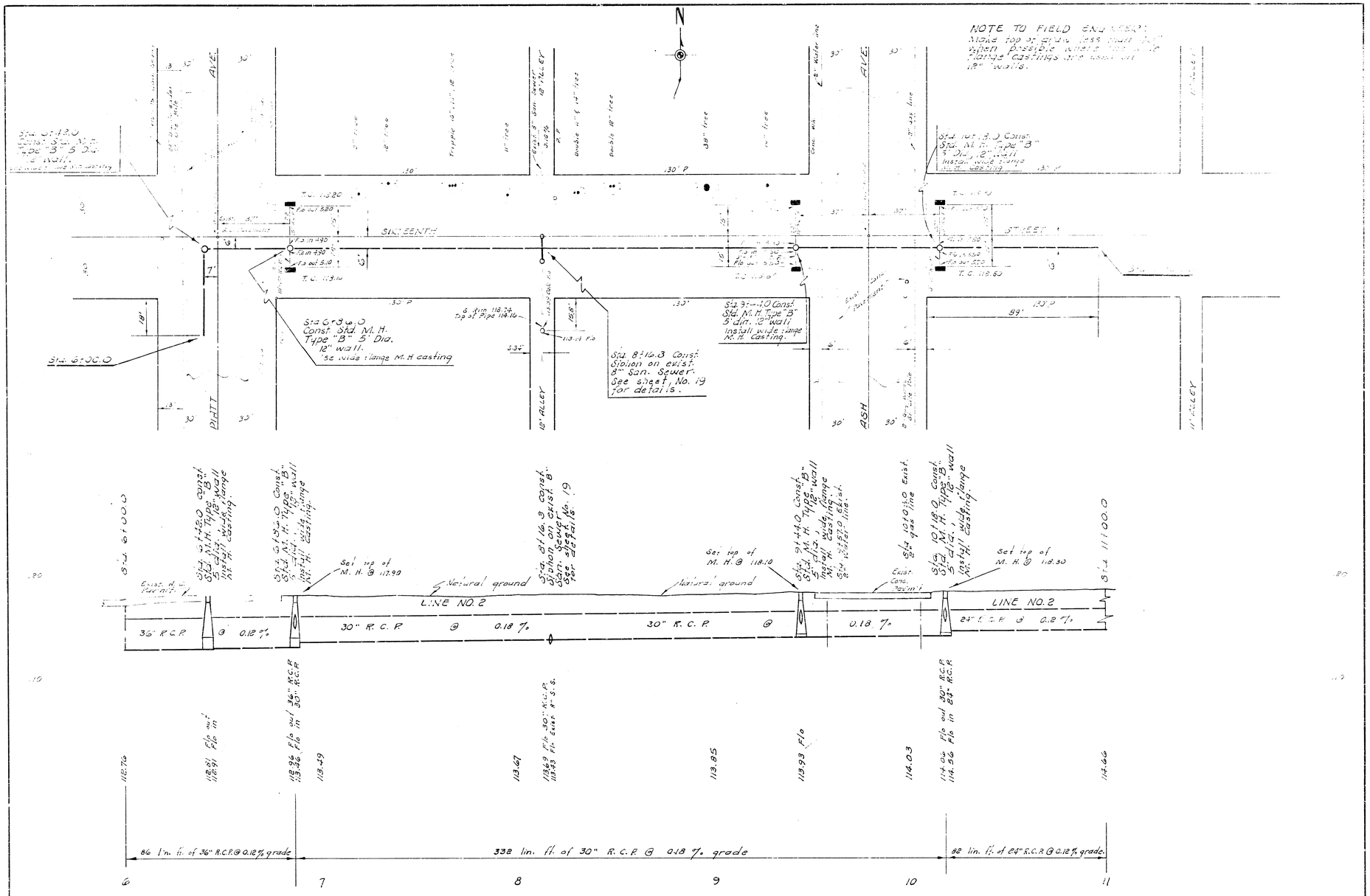


STORM WATER SEWER NO. 87
PROJECT NO. C28-96

13/19

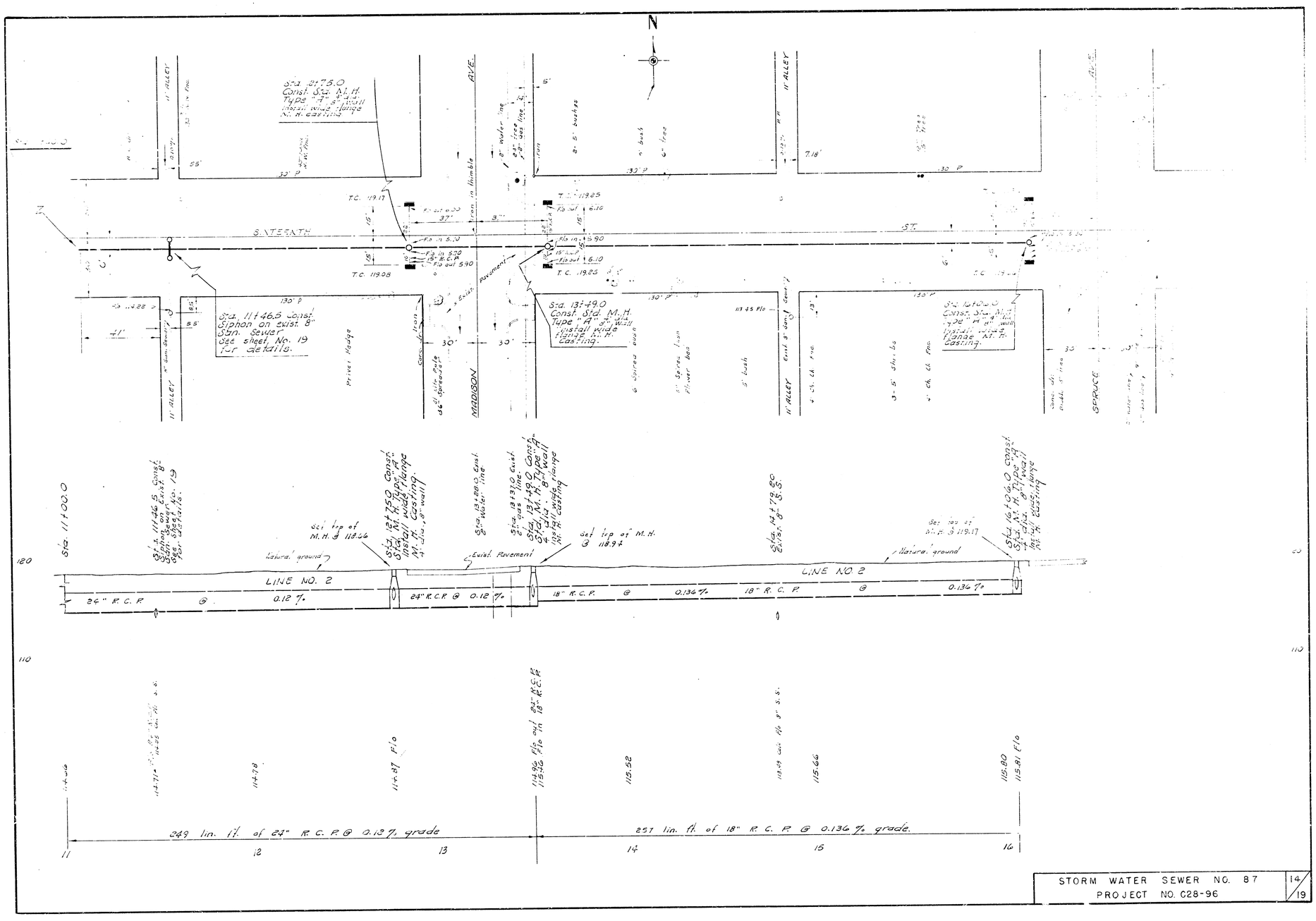


STORM WATER SEWER NO. 87
PROJECT NO. C28-96

14/19

## GENERAL NOTES

Bid price for grations shall include all cost of constructing grations except manholes.

Bid price of walk and drive removal and replacing shall include the 4" walks and 9" walks.

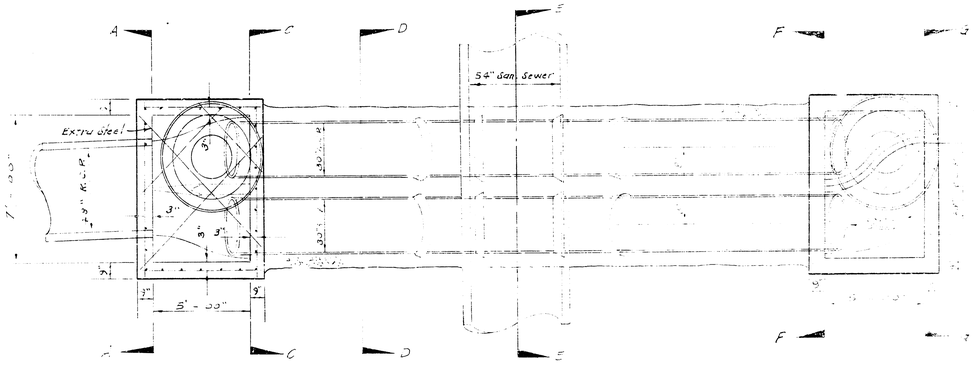


STA. 4+18.0

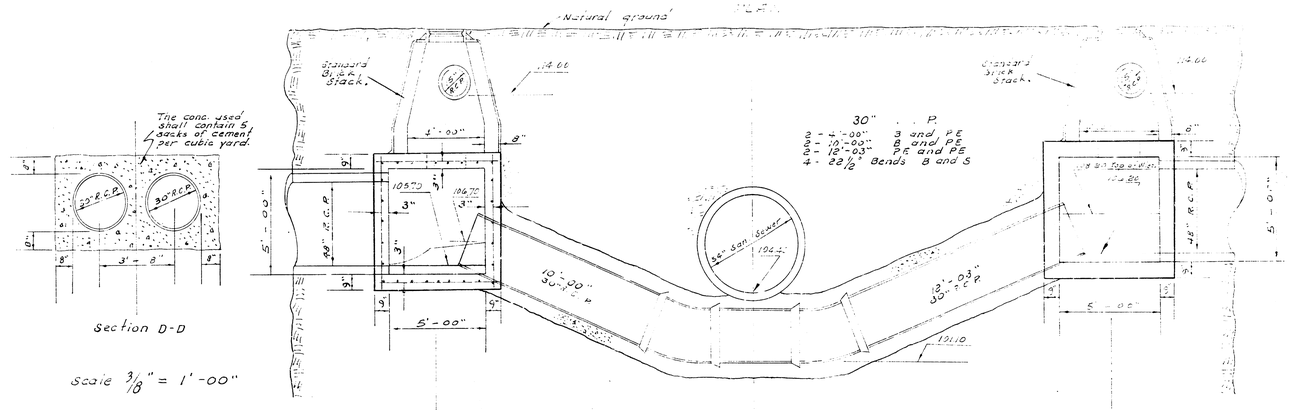


Section D-D

Scale 3/8" = 1'-00"

STA 3+96.0
Reinf. Conc. M. H.
Brick Stack

STA. 4+12.0
ELEVATION

STA 4+30.0
Reinf. Conc. M. H
Brick Stack

**NOTE:**
Install #5 bars at 9" centers both ways in floor and top on all reinf. conc. manholes in this project.
Install #5 bars at 12" centers both ways in all walls on all reinf. conc. manholes in this project.
Also install extra #5 bars as shown.
All steel is to clear 3" from the inside suface of all reinf. conc. manholes in this project.

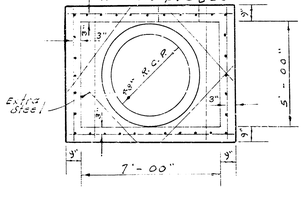


Section A-A
Section G-G

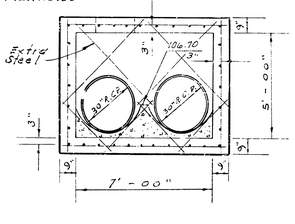


Section C-C

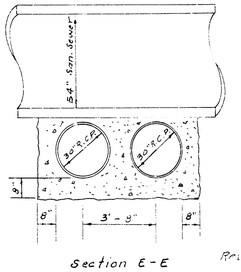


Section E-E

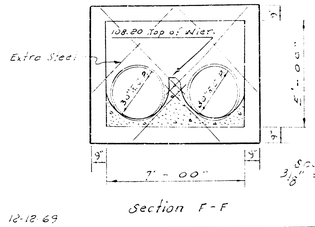


Scale 3/8" = 1'-00"

Section F-F

Revised 12-18-69

STORM WATER SEWER NO. 87
PROJECT NO. C28-96

15/19

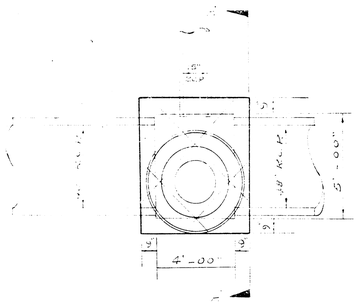


PLAN
Sta. 7+25.6

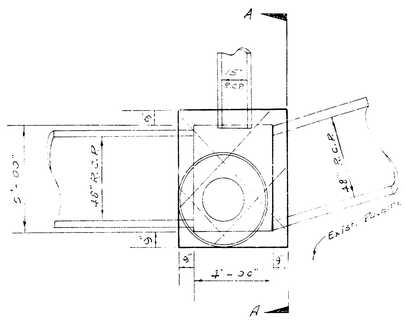


PLAN
Sta. 10+24.6

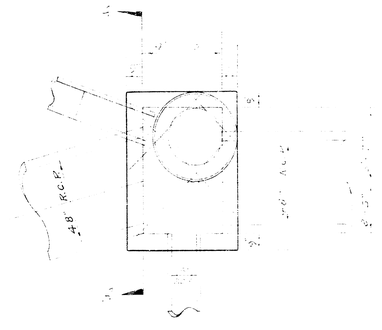


PLAN
Sta. 11+03.0

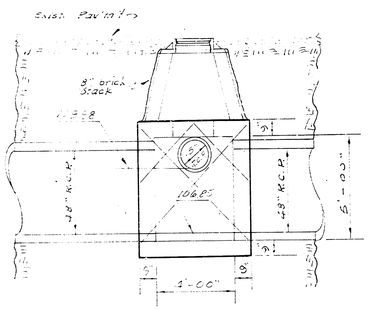


ELEVATION
Sta. 7+25.6
See sheet No. 3
Reinf. Conc. M. H.
Brick Stack

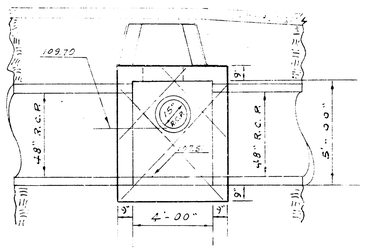


ELEVATION
Sta. 10+24.6
See sheet No. 3
Reinf. Conc. M. H. with
Brick Stack

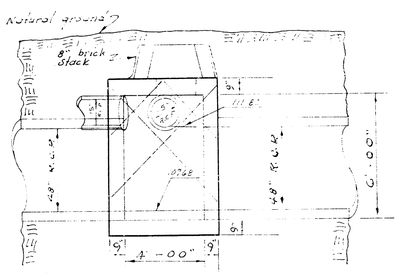


ELEVATION
Sta. 11+03.0
See sheet No. 4
Reinf. Conc. M. H.
Brick Stack

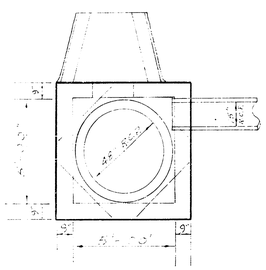


Section B-B
Sta. 7+25.6

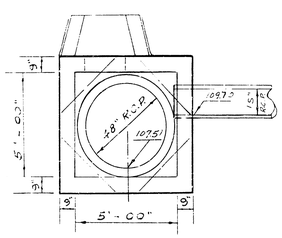


Section A-A
Sta. 10+24.6

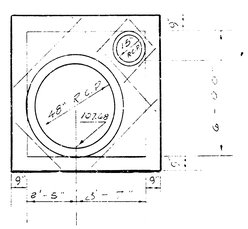


Section A-A
Sta. 11+03.0

Revised 12-12-69
Sta. 7+25.6 & Sta 10+24.6

Scale
3/8" = 1'-00"

STORM WATER SEWER NO. 87
PROJECT NO. C28-96

16/19

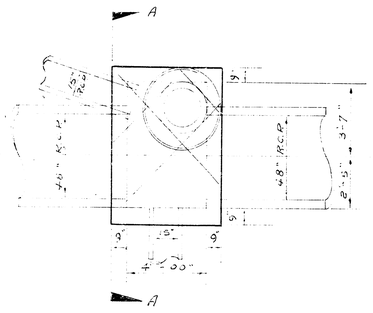


PLAN
Sta. 13+25.6

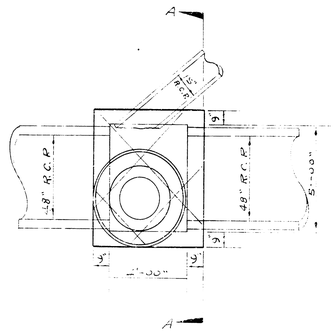


PLAN
Sta. 16+13.6

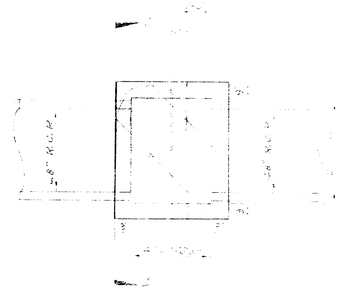


PLAN
Sta. 18+37.4

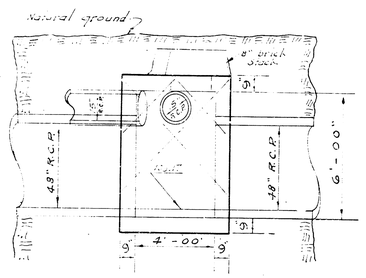


ELEVATION
Sta. 13+25.6
See sheet No. 4
Reinf. Conc. M. H.
Brick Stack

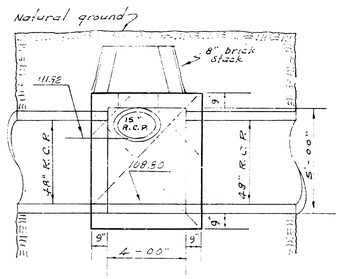


ELEVATION
Sta. 16+13.6
See sheet No. 4
Reinf. Conc. M. H.
Brick Stack

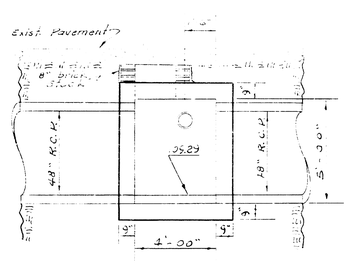


ELEVATION
Sta. 18+37.4
See sheet No. 5
Reinf. Conc. M. H.
Brick Stack

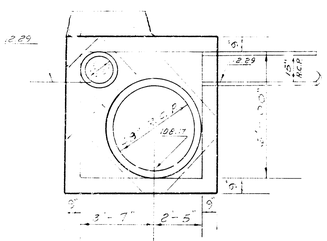


SECTION A-A
Sta. 13+25.6

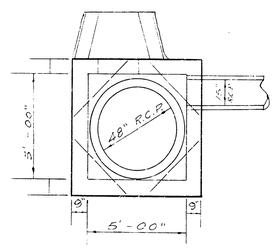


SECTION A-A
Sta. 16+13.6

NOTE:
Cast iron pipe to be included in cost of M. H.

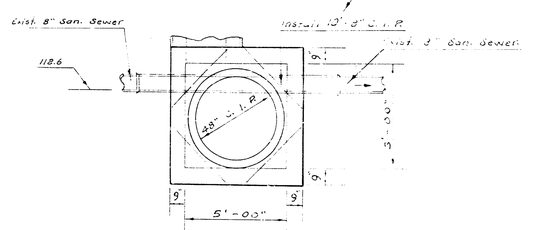


SECTION A-A
Sta. 18+37.4

Scale
3/8" = 1'-00"

STORM WATER SEWER NO. 87
PROJECT NO. C28-96

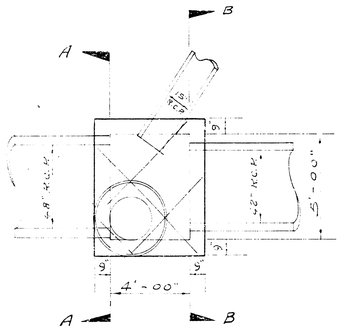


PLAN
Sta. 19+98.6

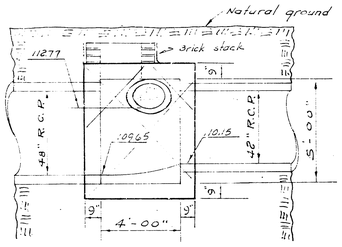


ELEVATION
Sta. 19+98.6
See sheet No. 5
Reinf. Conc. M. H.
Brick Stack

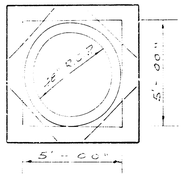


SECTION A-A
Sta. 19+98.6

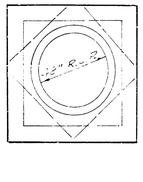


SECTION B-B
Sta. 19+38.6

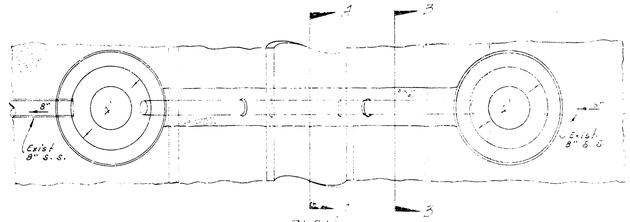


PLAN
Sta. 22+03.6
See sheet No. 6

NOTE:
Const. Std. manholes Type "A"
6" Conc. encasement at 8" C.I.P.




SECTION A-A
Sta. 22+03.6

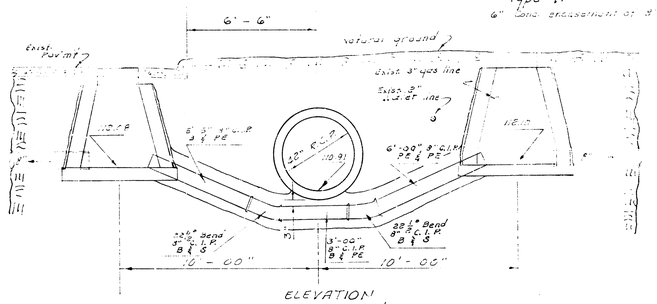


ELEVATION
San. Sewer Siphon
Sta. 22+08.6

SECTION B-B
Sta. 22+03.6
6" Conc. encasement

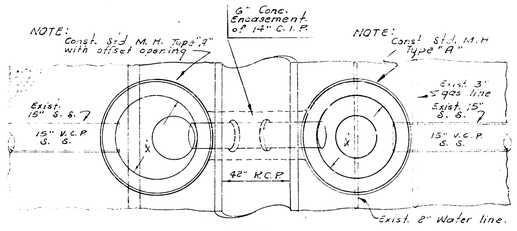


PLAN
Sta. 23+60.7
See sheet No. 6

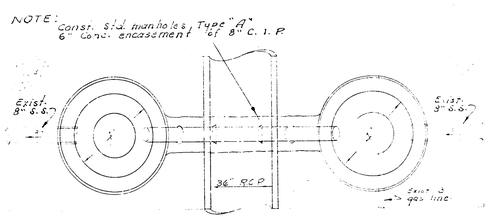


PLAN
Sta. 25+53.4
See sheet No. 6

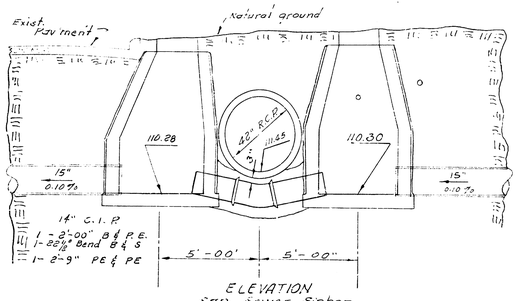


ELEVATION
San. Sewer Siphon
Sta. 23+60.7

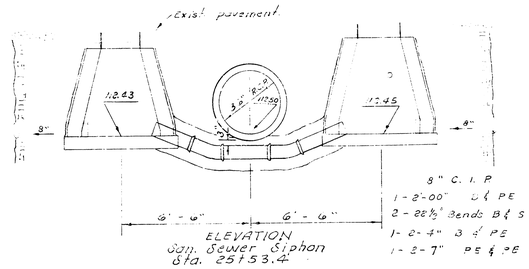


ELEVATION
San. Sewer Siphon
Sta. 25+53.4

Scale 3/8" = 1'-00"

STORM WATER SEWER NO. 87
PROJECT NO. C28-96

18/19

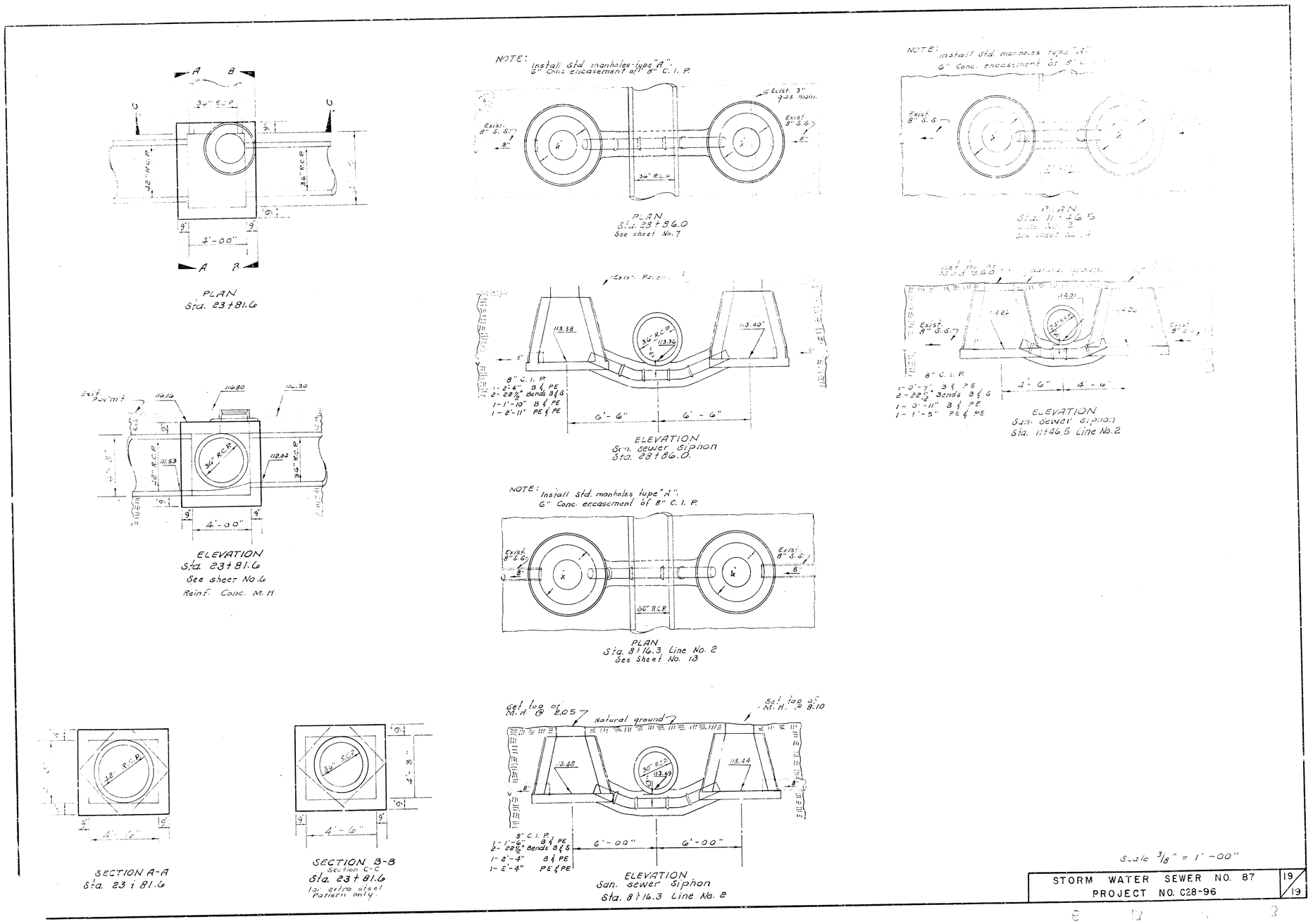


Scale 3/8" = 1'-00"

| STORM WATER SEWER NO. 87<br>PROJECT NO. C28-96 | 19/19 |
|---|---|