PLAN AND PROFILE FOR

STORM WATER SEWER NO. 109

CITY OF WICHITA, KANSAS

R. W. LINN — CITY ENGINEER

MARCH 1976, PROJECT NO. DBKA 574052

— INDEX —

SHEET NO.	
1	TITLE, LOCATION MAP, BENEFIT DISTRICT
2-7	STORM WATER SEWER PLAN & PROFILE
8	OUTFALL STRUCTURE DETAIL
8	SPECIAL DROP INLET DETAIL
8	RIPRAP DETAIL
9-10	REINF. CONC. M. H. DETAIL
10	INLET LOCATIONS
11	INLET DETAIL
12	X-SECTION ON OUTFALL CHANNEL
13	REINF. CONC. M. H. DETAIL
13	INLET LOCATIONS
14	REINF CONC. M. H. DETAIL

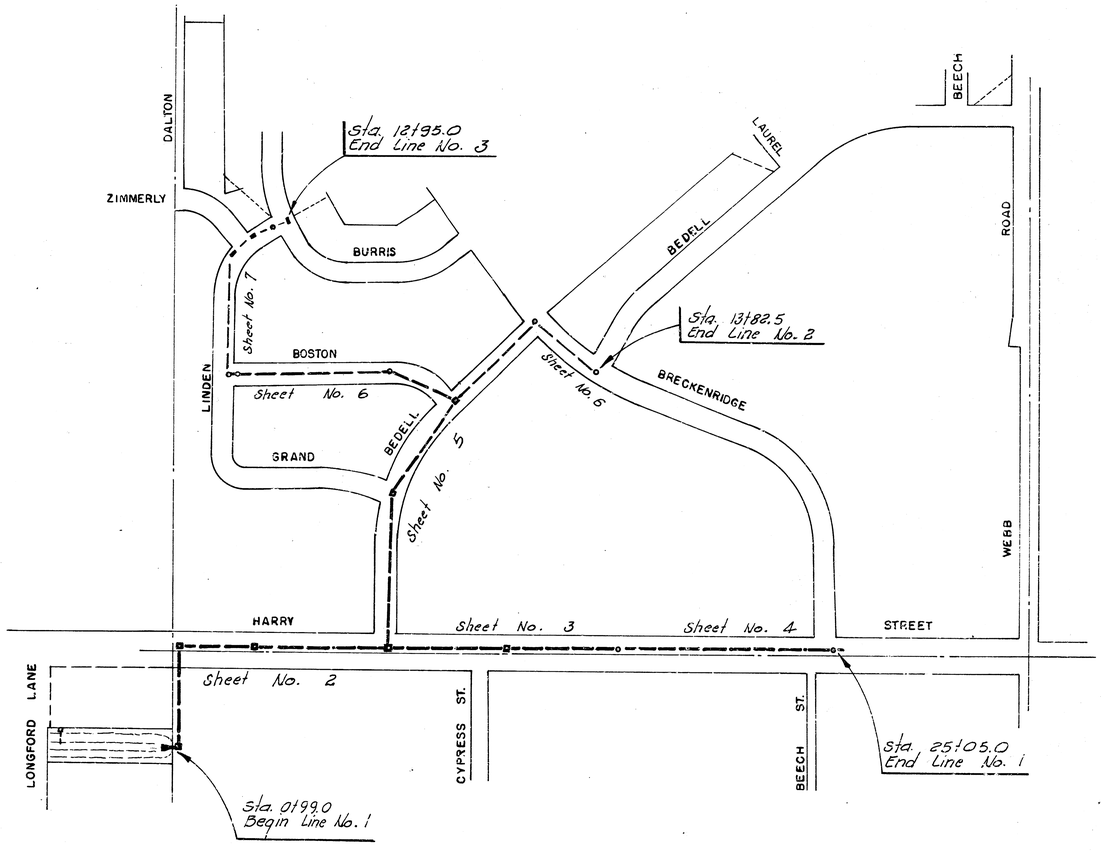

N

SCALE 1" = 200'

GENERAL NOTES

1. REMOVAL AND REPLACEMENT OF ASPHALT PAVEMENT WILL BE PAID FOR AT THE UNIT PRICE BID PER LIN. FT. OF ASPHALT PAVEMENT REMOVED AND REPLACED. LIMITS OF PAVEMENT REMOVAL AND REPLACEMENT WILL DEPEND LARGELY ON CONTRACTOR'S CONSTRUCTION OPERATION. LIMITS OF PAVEMENT REMOVAL AND REPLACEMENT SHALL BE APPROVED BY THE FIELD ENGINEER. ANY DAMAGE TO PAVEMENT UN-NECESSARILY CAUSED BY CONTRACTOR'S OPERATIONS SHALL BE REPAIRED BY THE CONTRACTOR AT HIS OWN EXPENSE.

2. CHANNEL AND MAINTENANCE BERM BETWEEN BOX CULVERT ON LONGFORD LANE AND BEGINNING OF STORM SEWER SHALL BE SEEDED AND MULCHED.

3. PART OF THE EXCESS EXCAVATED MATERIAL FROM CHANNEL EXCAVATION AND TRENCH EXCAVATION SHALL BE USED TO FILL DITCHES IN BEDELL RIGHT-OF-WAY FROM HARRY STREET TO BRECKENRIDGE. FILL IN DITCHES SHALL BE COMPACTED TO A DENSITY OF 90% OF STANDARD DENSITY. CONTRACTOR SHALL AREA GRADE THE RIGHT-OF-WAY ON BEDELL, GRAND, BOSTON, BRECKENRIDGE, AND LINDEN SUCH THAT THE STORM WATER WILL DRAIN TO INLETS CONSTRUCTED. THIS WORK WILL NOT BE PAID FOR DIRECTLY AND THE COST OF FILLING DITCHES AND AREA GRADING THE RIGHT-OF-WAY AS PREVIOUSLY DESCRIBED SHALL BE CONSIDERED AS SUBSIDIARY TO THE OTHER ITEMS OF WORK.

S. W. S. NO. 109
PROJECT NO DBKA 574052

1/14

B. M. 161.82 City Std. west Parkway & Harry 1/8 mile east of Rock Road 42' W. of 1/4 48' S. of 1/4 Sec. cor.

Match exist. ground south side.

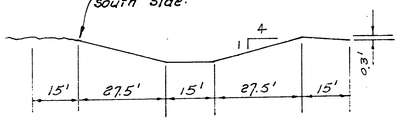

TYPICAL SECTION For OUTFALL CHANNEL See sheet No. 12 for Cross-sections

Asphalt Parking

Flo in 24" R.C.P. 156.00

626.4' M 624.83' P

2-30"x46" CMP

4.0'

New ditch

Iron

Iron

41'

70'

BEVELL

P.I.

Iron

Proposed 10" S. S.

LINE NO. 1

HARRY

STREET

TR = 0.3' below Flo of exist. ditch

Asphalt Pavement

50'

50'

12'

12'

24'

37'

20"

AC

W

W.V.O.

8"x36" CMP

9"x30" CMP

Iron

30'

70'

20'

Sta. 4+67.0 Const Reinf. Conc. M. H. See Sheet No. 9 for M. H. detail

NOTE: Do not disturb Hedge.

Sta. 6+88.0 Remove R. C. Culvert Const. Reinf. Conc. M. H. See sheet No. 10 for M.H. detail. Install 50'-24" R.C.P South Install 20'-24" R.C.P North

Alternate 24" C.M.P Fully Paved.

Sta. 11+14.4 Const. Reinf. Conc. M. H. See sheet No. 10 for M.H. detail. Sta. 0+00.0 for Line No. 2 No. Install 15" R.C.P. Stub E. N.E. Plug Stub.

Alternate 15" C.M.P.

CAUTION: Exist 20" A. C. Water main.

Install 3 Special Drop Inlets with 3'-18" R.C.P. betw. Inlets See sheet No. 8 for Inlet detail. Ctr. Inlet Flo in 2-18" = 157.30 Flo out 24" = 156.20 Outside Inlets Flo out 18" = 157.50

Alternate 18" C.M.P. Alternate 24" C.M.P fully paved.

NOTE: Riprap to be grouted Rock riprap.

Sta. 2+50 Install Special Drop Inlet and 38'-12" CMP South with end Section. See sheet No. 8 for Inlet detail

Backfill to be excavated Material Compacted to original density.

Sta. 0+25 to Sta. 1+00 Rock Rip rap area as shown Install toe all around Rip-rap Area. See sheet No. 8 for Rip-rap detail.

30' Perm. Easement 235'

LINE NO. 1

70' Temp. Const. Easement

0+71

20'

Sta. 1+20.0 const. Reinf. Conc. M. H. See Sheet No. 9 for M. H. detail.

Sta. 0+99.0 Beg. 66" R. C. P.

El. 157.5

El. 157.5

El. 1580 Iron

LONGFORD LANE

Ex. Int. 2 10's 25' N.W. Culvert.

-2+18.1

-2+50 -2+00 -1+50 -1+00 -0+50 0+00 0+50

15' Maintenance Berm

375'

100' Drainage Easement

15'

Rock Riprap

KGE Transformer Box

Iron

380'

Cn. Lk Pac. Iron

El. 1580

30'

70'

15' Maintenance Berm

Sta. 0+71 to Sta. 1+00 Const. Outfall Structure. See Sheet No. 8 for Structure detail.

Sta. 4+85 Exist. 20" A.C. Water line.

Sta. 4+67.0 Const. Reinf. Conc. M. H. See sheet No. 9 for M. H. detail.

Sta. 6+88.0 Const. Reinf. Conc. M. H See sheet No. 10 for M.H. detail. Install 50'-24" R.C.P. South Install 20'-24" R.C.P. North Alternate 24" C.M.P. fully paved.

Sta. 11+14.4 Const. Reinf. Conc. M. H. See sheet No. 10 for M.H. detail. Sta. 0+00.0 for Line No. 2 No. Install 15" R.C.P. Stub E. N.E. Plug Stub. Alternate 15" C.M.P.

Plan Scale 1" = 40'
Profile Scale 1" = 40' Horz.
1" = 5' Vert.

Exist. 2-10'x5' R.C. Culvert

Sta. 2+50 Install Special Drop Inlet and 3-12" CMP South with end Section. See sheet No. 8 for Inlet detail

Sta. 0+25 to Sta. 1+00 Rock Rip-rap Area Install toe all around Rip-rap area. See sheet No. 8 for detail

Sta. 0+71 to Sta. 1+00 Const. Outfall Structure See sheet No. 8 for detail.

Sta. 0+99.0 Beg. 66" R.C.P.

Sta. 1+20.0 Const. Reinf. Conc. M. H See Sheet No. 9 for M. H. detail.

Natural ground

Fill

Fill

TR = 156.9

El. 157.5

4'

Flo in 154.90 @ Inlet.

Flo out 153.40 @ Inlet.

Flo out @ Ditch Flo 149.70

LINE NO. 1

66" R.C.P.

CAUTION: Top of 20" A.C. Water main 149.50

Exist. N. ditch

36" R.C.P.

N.S. Harry St. Proposed top of cb.

Top Exist. A.C. Pavement

New ditch N.S. Harry St.

LINE NO. 1

66" R.C.P.

Top exist. 20" A.C. Water main. 155.00

165
160
155
150
145

148.35 DS
148.62 Flo 2-10x5' R.C. Culvert

149.11

149.23 Flo out
149.39 Flo in 66"
149.72 Flo out
149.80 Flo in
149.90 Flo out

150.32

150.62

151.03

151.29 Flo out
151.39 Flo in

151.52

151.98

152.27 Flo
152.31 Flo in 24"
155.77 North and South

152.62

152.93

153.24

153.55

153.59 Flo out 66"
155.00 Flo in 54"
155.09 Flo in 48"
161.00 Flo in 15"
R.C.P. Stub E. N.E.

380'
+0.174 %

589 Lin. ft. of 66" R.C.P @ 0.40 % grade.

Alternate 66" C.M.P Fully paved

4264 Lin. ft. of 66" R.C.P @ 0.31 % grade

Alternate 66" C.M.P. Fully paved.

0 1 2 3 4 5 6 7 8 9 10 11

S. W. S. NO. 109
PROJECT NO. DBKA 574052

2/14

Sta. 11+43.4

BEDELL

Sta. 14+83.9 Const. Reinf. Conc. M. H.
See Sheet No. 14 for M. H. Detail
Install 54'-24" R.C.P. Southwest
Install 20'-24" R.C.P. North.
Alternate 24" C. M. P. Fully Paved.

Pipe to be installed under Box culvert. Culvert to remain in Place.

24" S.W.S. by others

Sta. 14+75 Const. Special Ditch plug. See Sheet No. 13 for detail.

Flo out 161.1

644' M
645' P

Flo in 160.84

New ditch

340.5'

Q U A I L

1

SECOND

M E A D O W S

ADDITION

2

Sta. 17+87.4

Dirt Lvr.

Iron

Install Special Drop Inlet.
See sheet No. 8 for Inlet detail
Flo in 164.50, Flo out 24" = 161.65

Sta. 18+20.0 Const. Std. M. H.
Type "B" (5' dia.)
Install 18" R.C.P. Stub South.
Install 24'-24" R.C.P. North.

NOTE:
Alternates
18" C. M. P.
24" C. M. P. Fully paved.

655' P

Sta. 21+00.0

LINE NO. 1

Exist. A. C. Pavement

Plug 18" Stub So.

CAUTION: Exist. 20" Water main.

Sta. 11+14.4 Line No. 1
Sta. 0+00.0 Line No. 2 North

Install 3 Special drop Inlets.
Install 8'-18" R.C.P. betw. Inlets.
See sheet No. 8 for Inlet detail.
East Inlet
T.P = 0.3' below exist. ditch Flo
Flo in 18" R.C.P = 162.30
Flo out 24" R.C.P = 161.80
Ctr. Inlet
TR = 0.3' below exist. ditch Flo
Flo in 18" R.C.P = 162.60
Flo out 18" R.C.P = 162.50
West Inlet
TR = 0.3' below exist. ditch Flo
Flo out 18" R.C.P = 162.80

NOTE:
Installation of pipe under culvert will not be paid for directly and this cost shall be included in the unit price bid for the pipe.

Sta. 14+20.3

NOTE:
Replace A. C. Pavement.
Top of manhole to match exist. top of Pavement.

H A M P T O N

A C R E S

CYPRESS ST

Sta. 14+36 Bore and Jack Pipe under exist. R. C. Culvert.
Sta. 14+75 Const. Special ditch plug. See sheet No. 13
Sta. 14+83.9 Const. Reinf. Conc. M.H. See sheet No. 14 for M.H. detail.

Install 54'-24" R.C.P. Southwest
Install 20'-24" R.C.P. North.
Alternate 24" C.M.P. Fully paved.

Top of M.H. to match exist. Pavement.

Top exist. A.C. pavement.

Top of M.H. to match exist. pavement.

Sta. 18+20.0 Const. Std. M.H.
Type "B" (5' dia.)
Install 18" R.C.P. Stub South.
Install 24'-24" R.C.P. North.
Plug 18" Stub South.
Alternate 24" C.M.P. Fully paved.
Alternate 24" C.M.P.

Proposed N. cb. Harry St.

Flo new ditch N. S. Harry St.

Sta. 21+00.0

LINE NO. 1

Flo new ditch N.S. Harry St.

Flo new ditch N. S. Harry St.

48" R. C. P.

36" R. C. P.

36" R. C. P.

Top of Exist. 20" A.C. Water Main 160.50

155.09 | 155.91 | 156.87 | 157.83 | 160.64 Flo in 24" North & South | 158.64 Flo out 48" | 159.42 Flo in 36" | 159.72 | 160.26 | 160.80 | 161.34 | 161.45 Flo 162.95 Flo in 18" R.C.P South 161.45 Flo in 24" R.C.P North | 161.68 | 161.96 | 162.24 Flo

Pipe to be installed under Box Culvert. Culvert to remain in Place.

369.5 Lin. fl. of 48" R.C.P. @ 0.96% grade.
Alternate 48" C. M. P. Fully paved.

336.1 Lin. ft. of 36" R.C.P. @ 0.54% grade.
Alternate 36" C. M. P. Fully paved.

280 Lin. fl of 36" R.C.P. @ 0.28 % grade
Alternate 36" R.C.P. Fully paved.

S. W. S. NO. 109
PROJECT NO. DBKA 574052

7 8 14 14

B. M. 172.12 City std. SW cor. Harry St. & Webb Road.

QUAIL MEADOWS
SECOND ADDITION
⑥
2

UNPLATTED

Sta. 24+42.4 Iron
Cross cut on North BRECKENRIDGE 10.3 - 18" CMP
Sta. 25+12.4 Iron
Sta. 25+00.0 Const. Std. M.H. Type "B" (5' dia.) See sheet No. 10 for inlet locations.
Sta. 21+00.0
New ditch
LINE NO. 1
Exist. A.C. Pavement
NOTE: Alternate 30" C.M.P. Fully paved.
Install 30" R.C.P. Stub East.
Plug Stub East.
End LINE NO. 1
550.25' M
593.75
30' ROAD
Iron
HAMPTON ACRES
BEECH ST.
UNPLATTED
WEBB
Tele Pole
Fire Hydrant
Mail Box
Flo. Light
Sign
Gas Line
Water Line
Sewer Line
Storm Drain
Curb Inlet
Manhole
Gas Valve
Water Valve
Gas Meter
Water Meter
Power Pole
Guy Wire
Fence
Concrete Drive
Asphalt Drive
Gravel Drive
Concrete Walk
Asphalt Walk
Gravel Walk
Concrete Curb
Asphalt Curb
Gravel Curb
Concrete Gutter
Asphalt Gutter
Gravel Gutter
Concrete Pavement
Asphalt Pavement
Gravel Pavement
Concrete Alley
Asphalt Alley
Gravel Alley
Concrete Road
Asphalt Road
Gravel Road
Concrete Street
Asphalt Street
Gravel Street
Concrete Highway
Asphalt Highway
Gravel Highway
Concrete Bridge
Asphalt Bridge
Gravel Bridge
Concrete Culvert
Asphalt Culvert
Gravel Culvert
Concrete Pipe
Asphalt Pipe
Gravel Pipe
Concrete Conduit
Asphalt Conduit
Gravel Conduit
Concrete Duct
Asphalt Duct
Gravel Duct
Concrete Manhole
Asphalt Manhole
Gravel Manhole
Concrete Inlet
Asphalt Inlet
Gravel Inlet
Concrete Catch Basin
Asphalt Catch Basin
Gravel Catch Basin
Concrete Curb Inlet
Asphalt Curb Inlet
Gravel Curb Inlet
Concrete Gutter Inlet
Asphalt Gutter Inlet
Gravel Gutter Inlet
Concrete Pavement Inlet
Asphalt Pavement Inlet
Gravel Pavement Inlet
Concrete Alley Inlet
Asphalt Alley Inlet
Gravel Alley Inlet
Concrete Road Inlet
Asphalt Road Inlet
Gravel Road Inlet
Concrete Street Inlet
Asphalt Street Inlet
Gravel Street Inlet
Concrete Highway Inlet
Asphalt Highway Inlet
Gravel Highway Inlet
Concrete Bridge Inlet
Asphalt Bridge Inlet
Gravel Bridge Inlet
Concrete Culvert Inlet
Asphalt Culvert Inlet
Gravel Culvert Inlet
Concrete Pipe Inlet
Asphalt Pipe Inlet
Gravel Pipe Inlet
Concrete Conduit Inlet
Asphalt Conduit Inlet
Gravel Conduit Inlet
Concrete Duct Inlet
Asphalt Duct Inlet
Gravel Duct Inlet

Sta. 21+00.0
Top Exist. A.C. pavement
Proposed N. cb Harry St.
Top of M.H. to match Exist. pavement.
Sta. 25+00.0 Const. Std. M.H. Type "B" (5' dia.) See sheet No. 10 for inlet locations. Install 30" R.C.P. Stub East. Plug End LINE NO. 1
Proposed top of N. cb Harry St.
Flo New ditch N.S.
LINE NO. 1
Alternate 30" C.M.P. Fully paved.
36" R. C. P.
Flo out proposed 8" San. Sewer.
175
170
165
160
162.24
162.52
162.80
163.08
169.03 Flo in 18" N.
163.36 Flo out 36"
163.96 Flo in 30" Stub
170.20 Flo in 15" NE
Plug 30" Stub East
400 Lin. ft. of 36" R.C.P. @ 0.28 % grade
Alternate 36" C. M. P. Fully paved.
21
22
23
24
25

S. W. S. NO. 109
PROJECT NO. DBKA 574052
4/14
14

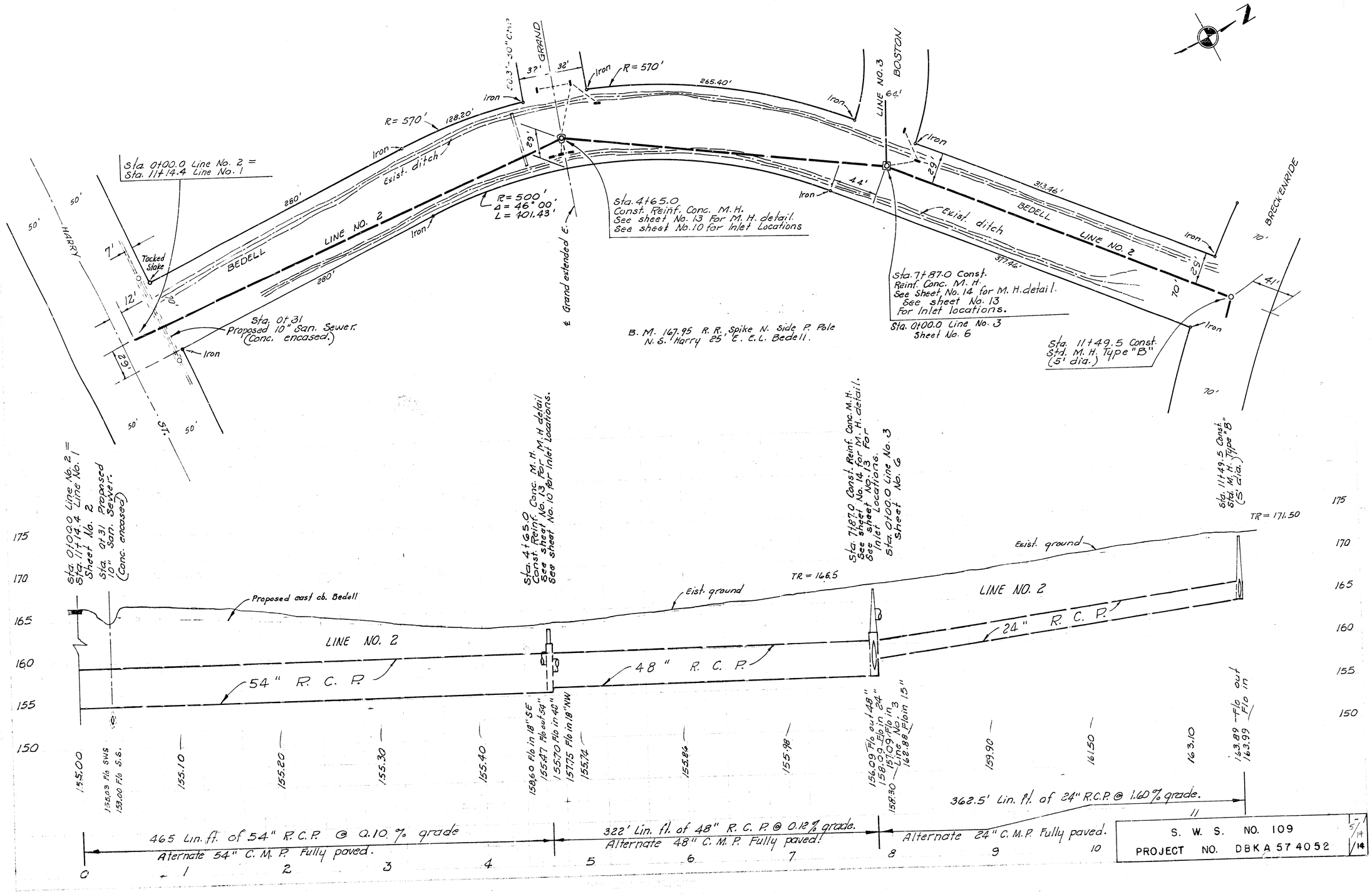

S. W. S. NO. 109

PROJECT NO. DBKA 57 4052

5/14
14/14

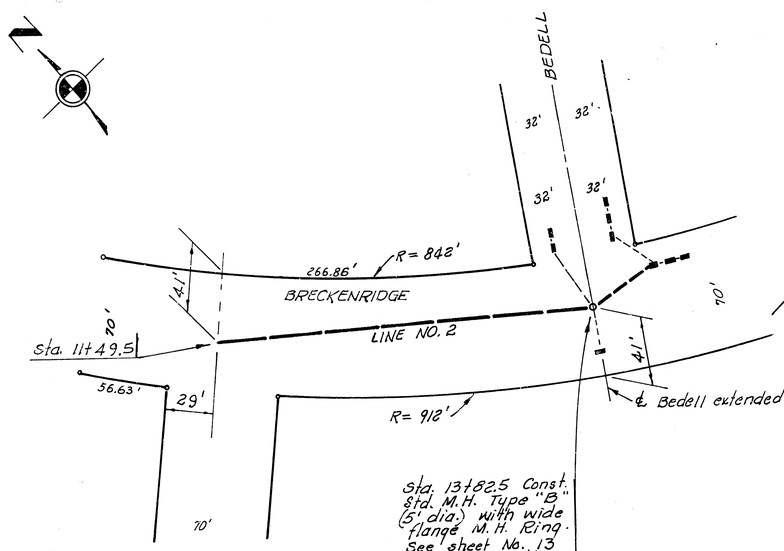

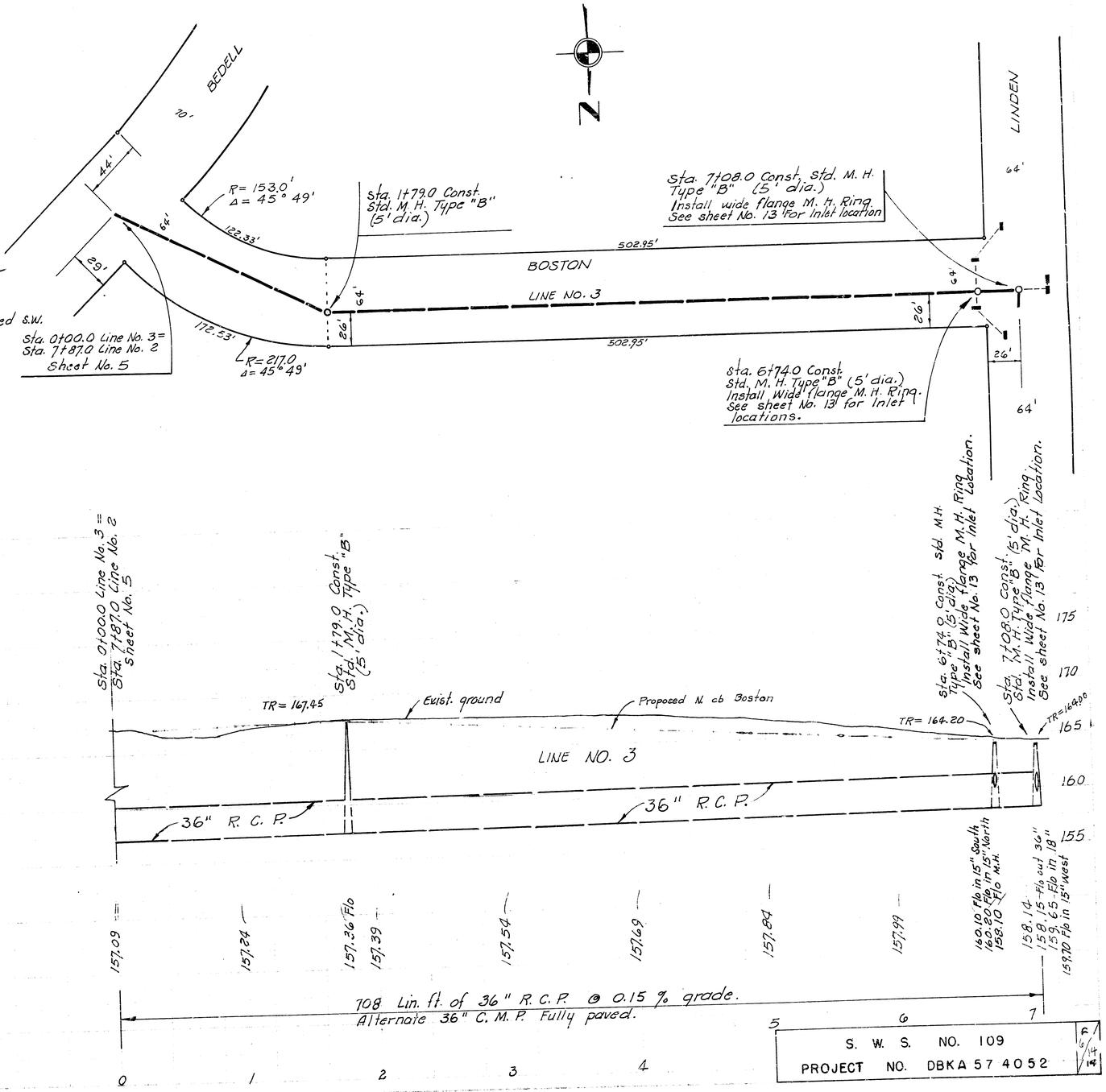

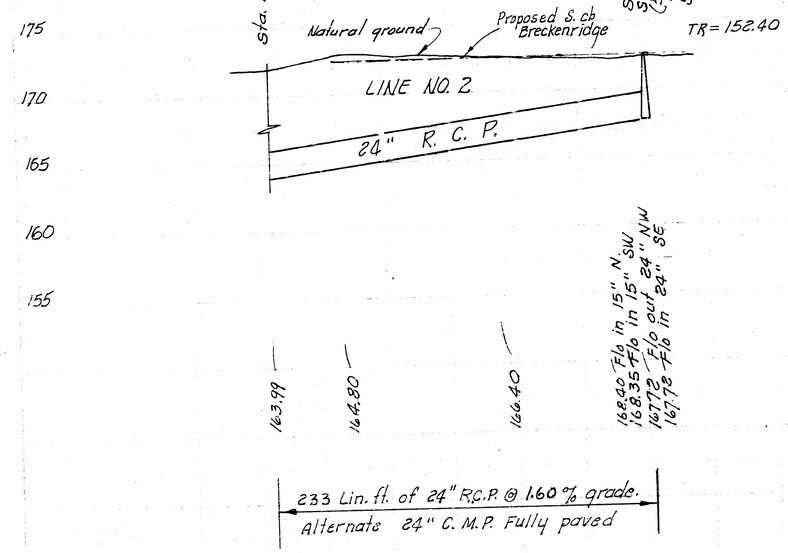

S. W. S. NO. 109
PROJECT NO. DBKA 57 4052

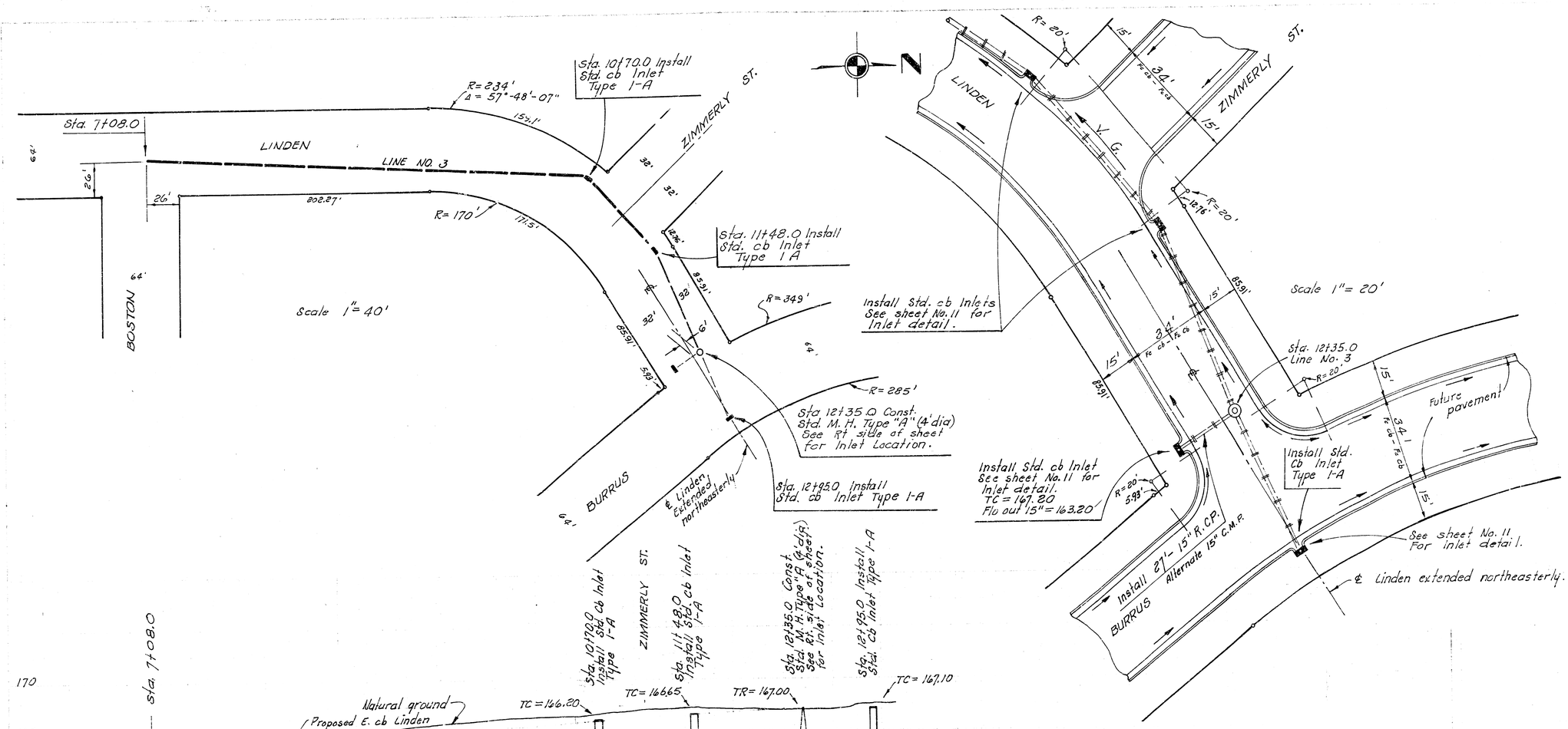

S. W. S. NO. 109
PROJECT NO. DBKA 574052

7/14
14/14

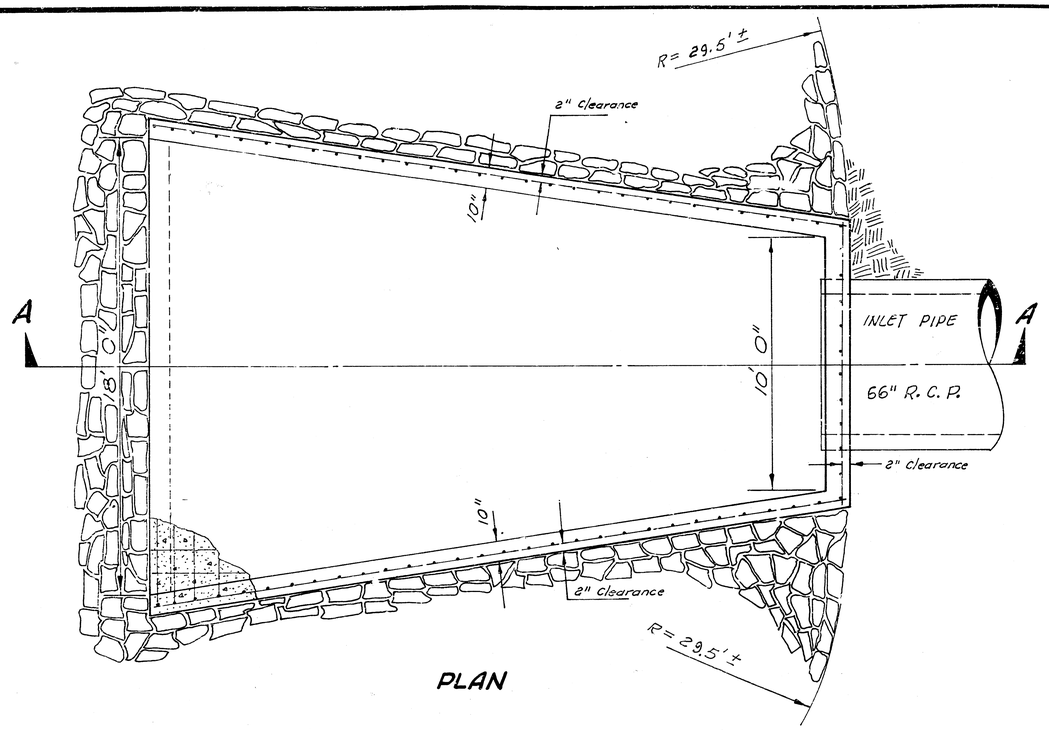

PLAN

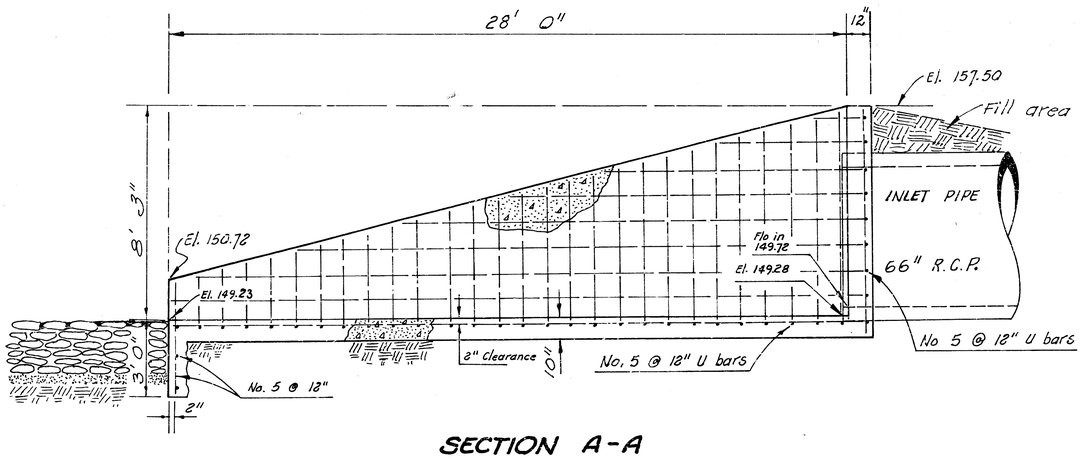

SECTION A-A
OUTFALL STRUCTURE

Sta. 0+71 to Sta. 1+00
Line No. 1 Sheet No. 2
scale 3/8" = 1' 0"

Rock toe to be constructed all around the area to be rock ripraped. Rock toe will not be paid for directly and shall be considered as subsidiary to the price bid per Sq. yard of Rock Riprap.

Rock Toe to be grouted full depth from bottom to surface. Surface of all remaining Rock Riprap to be grouted.

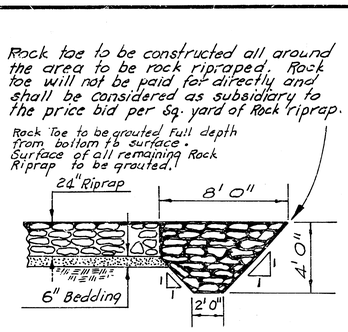

RIPRAP DETAIL

No Scale

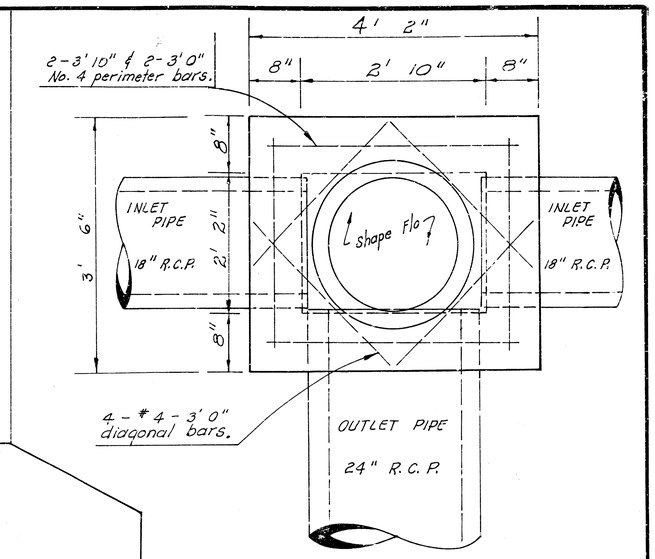

PLAN

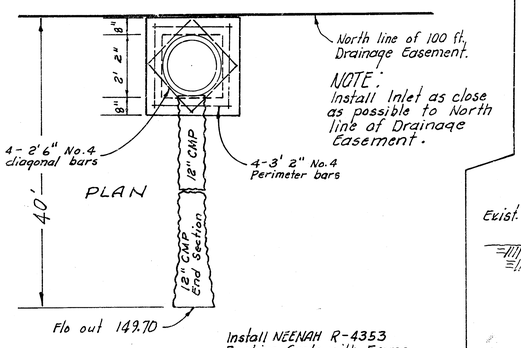

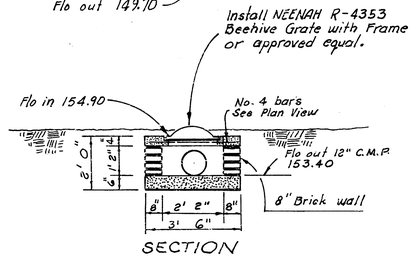

SPECIAL DROP INLET

Sta. - 2+50
Sheet No. 2

See Sheet No. 12 For X- Sections

scale 3/8" = 1' 0"

Alternates
18" C. M. P.
24" C. M. P fully paved.

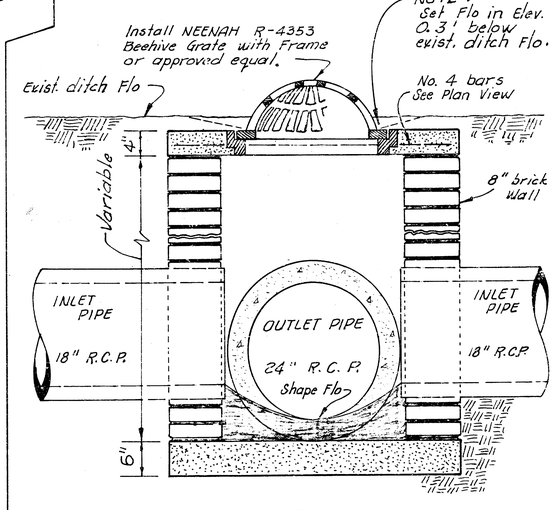

SECTION
SPECIAL DROP INLET

Sta. 6+88.0 Line No. 1 Sheet No. 3
Sta. 14+83.9 Line No. 1 Sheet No. 3
Sta. 18+20.0 Line No. 1 Sheet No. 3
Sta. 25+05.0 Line No. 1 Sheet No. 4
Scale 1" = 1' 0"

S. W. S. NO. 109
PROJECT NO. DBKA 574052

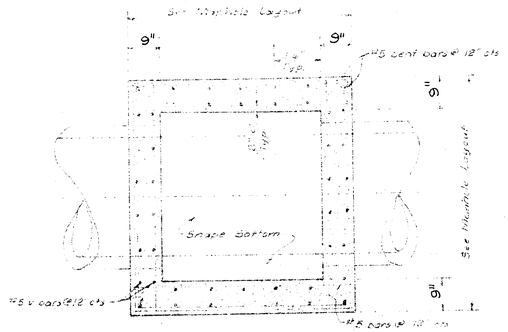

PLAN SECTION THRU WALLS
SCALE: 3/8" = 1'0"

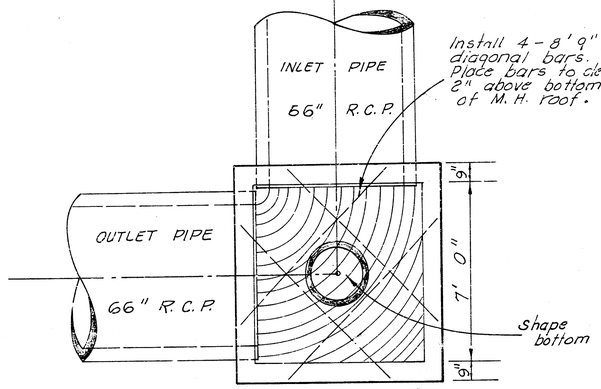

PLAN SECTION THRU WALLS
Sta. 1+20
LINE NO. 1

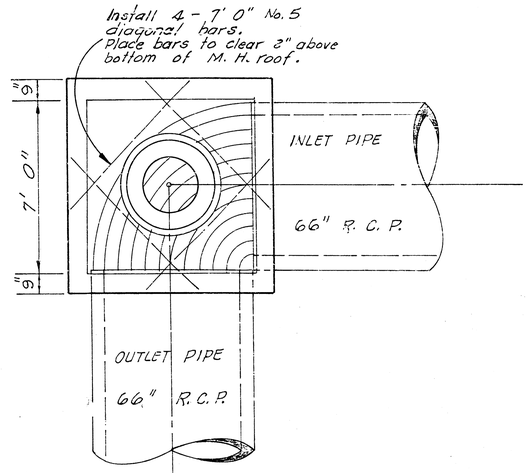

PLAN SECTION THRU WALLS
Sta. 4+67.0
LINE NO. 1

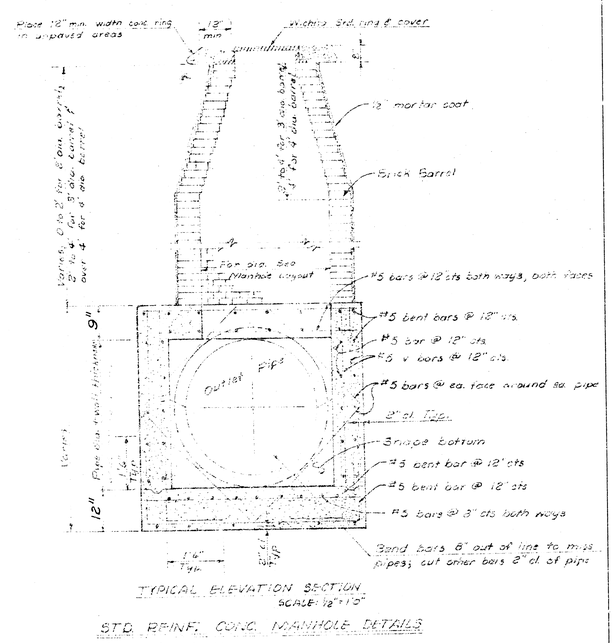

TYPICAL ELEVATION SECTION
SCALE: 1/2" = 1'0"

STD. REINF. CONC. MANHOLE DETAILS

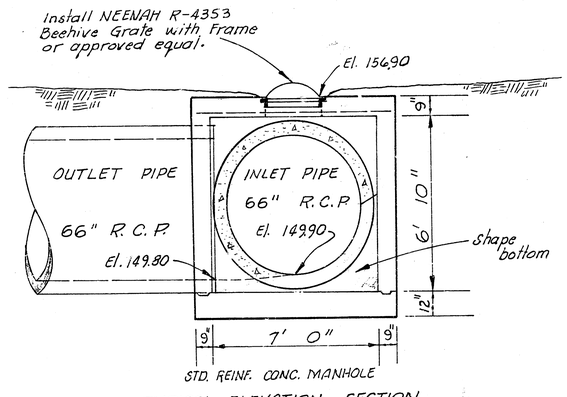

STD. REINF. CONC. MANHOLE
TYPICAL ELEVATION SECTION
Sta. 1+20
LINE NO. 1
Sheet No. 2
Scale 3/8" = 1' 0"

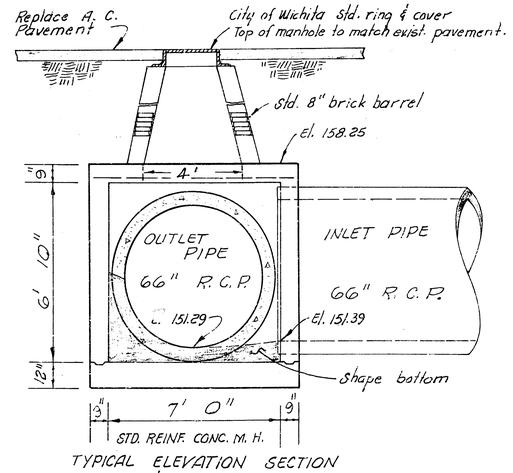

STD. REINF. CONC. M. H.
TYPICAL ELEVATION SECTION
Sta. 4+67.0
LINE NO. 1
SHEET No. 2
Scale 3/8" = 1' 0"

S. W. S. NO. 109
PROJECT NO. DBKA 5 74052

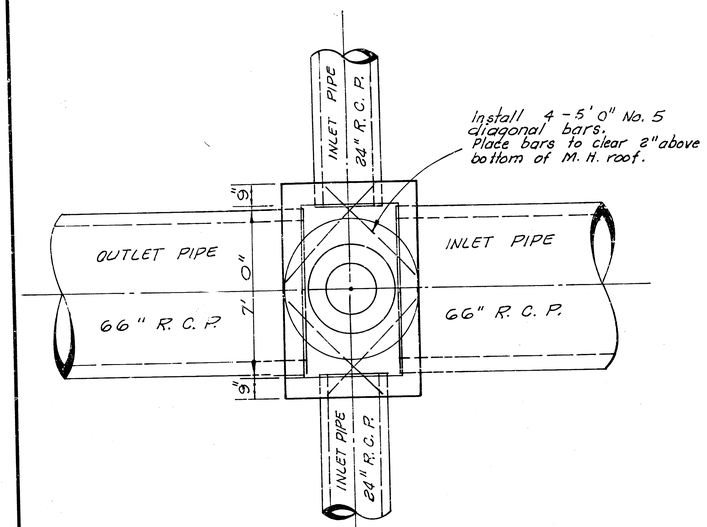

PLAN SECTION THRU WALLS
Sta. 6+88.0
LINE NO. 1
Sheet No. 2

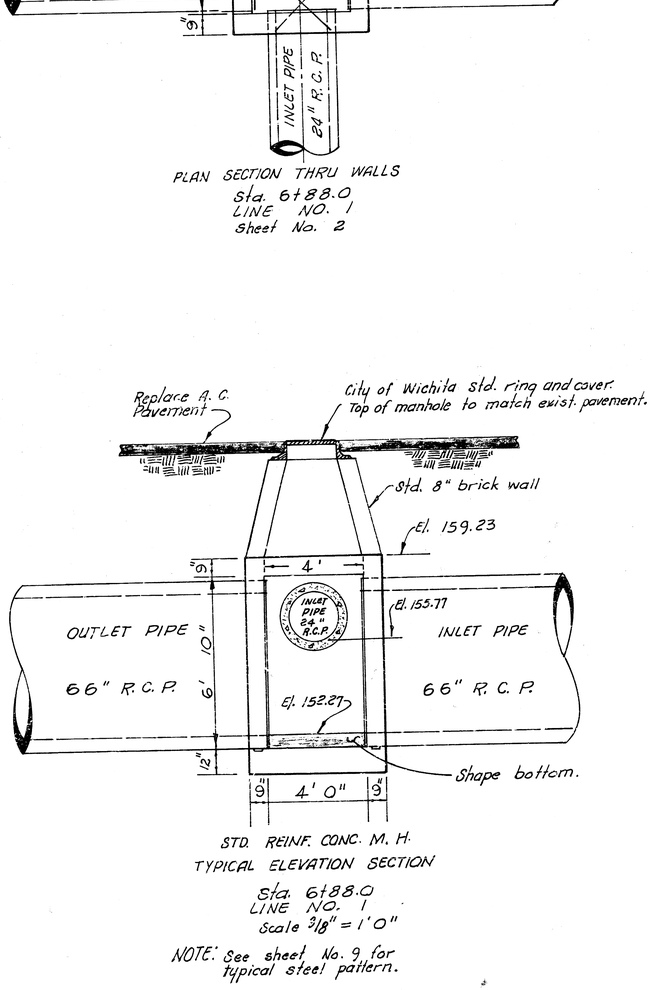

STD. REINF. CONC. M.H.
TYPICAL ELEVATION SECTION
Sta. 6+88.0
LINE NO. 1
Scale 3/8" = 1'0"

NOTE: See sheet No. 9 for typical steel pattern.

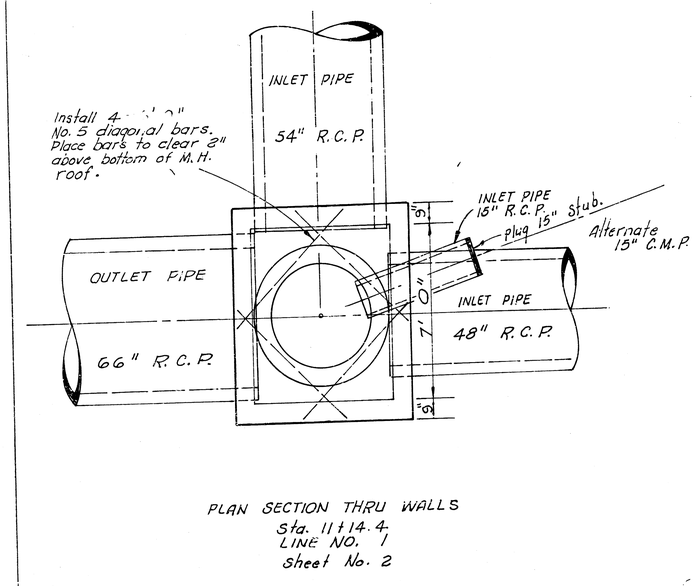

PLAN SECTION THRU WALLS
Sta. 11+14.4
LINE NO. 1
Sheet No. 2

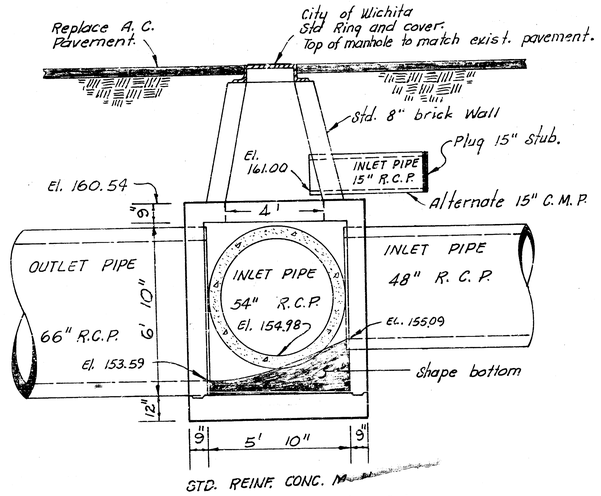

STD. REINF. CONC. M.H.
TYPICAL ELEVATION SECTION
Sta. 11+14.4
LINE NO. 1
Scale 3/8" = 1' 0"

NOTE: See sheet No. 9 for Typical Steel pattern.

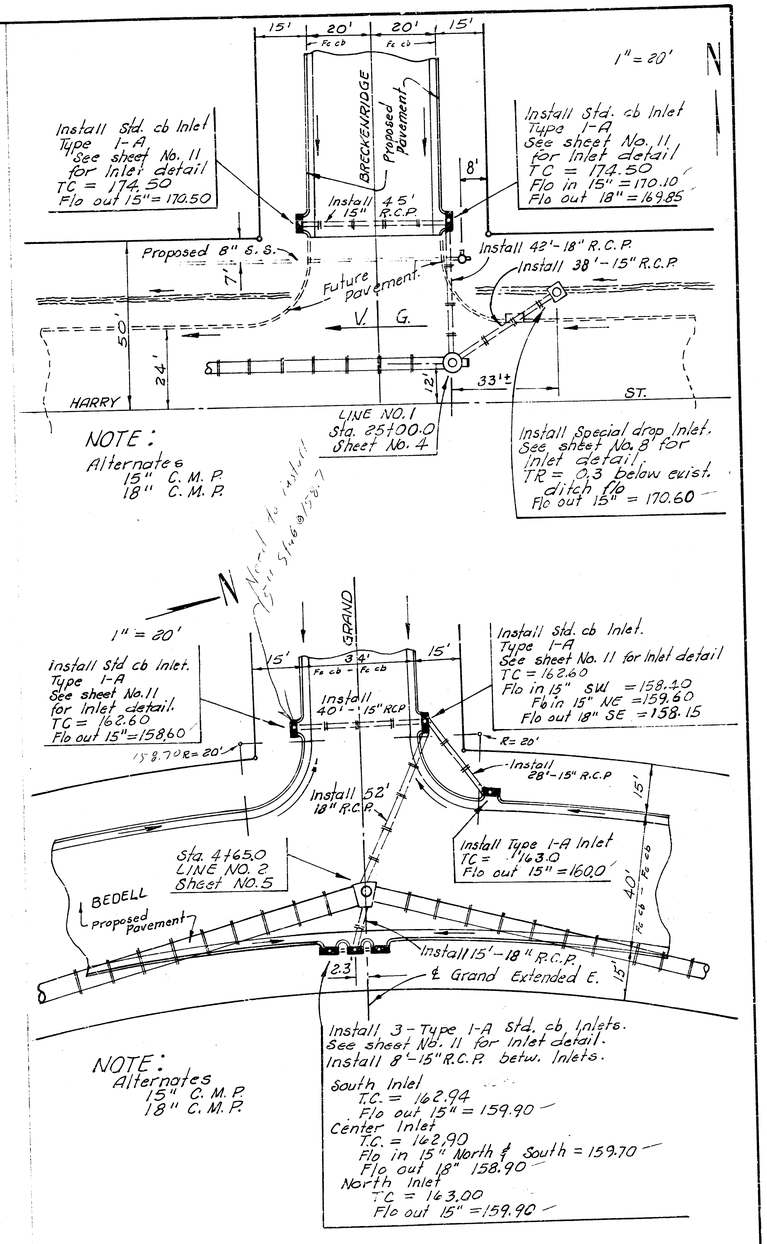

S. W. S. NO. 109
PROJECT NO. DBKA 574052

13/14

S. W. S. NO. 109
PROJECT NO. DBKA574052

11/14

South Side

El. 158.0

Match exist. ground

Match

Match

Match

Match

Match

Match

Match

Match exist. ground

0+11

0+50

0+100

0+150

-0+50

-1+00

-1+50

-2+00

-2+50

-2+75

-2+81

9.22

9.20

8.11

9.28

8.93

8.85

8.76

8.67

8.63

148.62

Flo out 12" CMP
El 149.70

10'

38' - 12" CMP with End Section

El. 154.0

6.08

6.00

5.90

5.81

5.73

5.64

5.55

5.51

5.50

155

150

5.78

5.70

5.61

5.59

5.51

5.49

5.41

5.39

6.8% Flo in 154.90

1% cut 153.40

6.8%

S. W. S. NO. 109

PROJECT NO. DBKA 574052

12 / 14 / 19

North Side

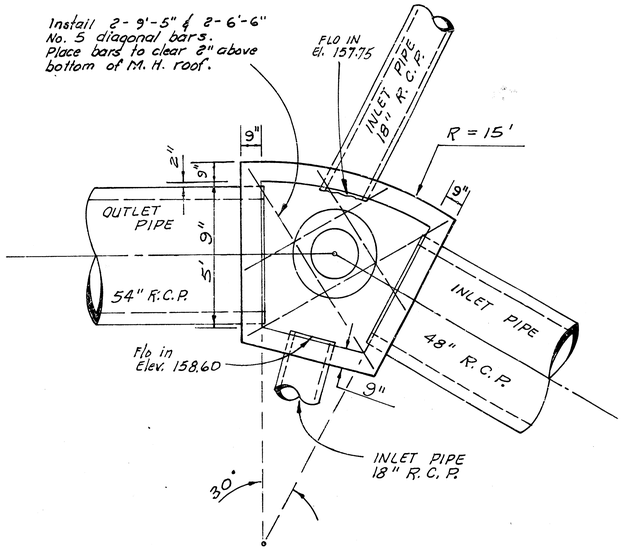

PLAN SECTION THRU WALLS
Sta. 4+65.0
LINE NO. 2
Sheet No. 5
Sheet No. 10

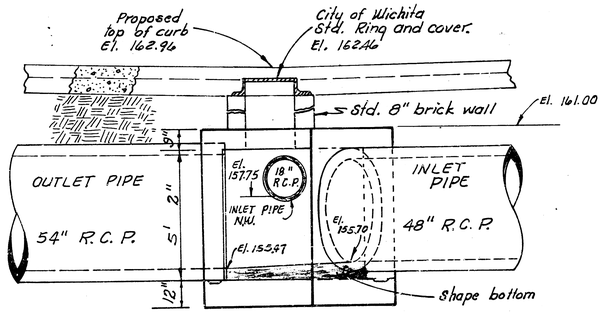

STD. REINF. CONC. MANHOLE
TYPICAL ELEVATION SECTION
Sta. 4+65.0
LINE NO. 2
Sheet No. 5
Sheet No. 10

Scale 3/8" = 1'0"

NOTE: See sheet, No. 9 for Typical Steel pattern.

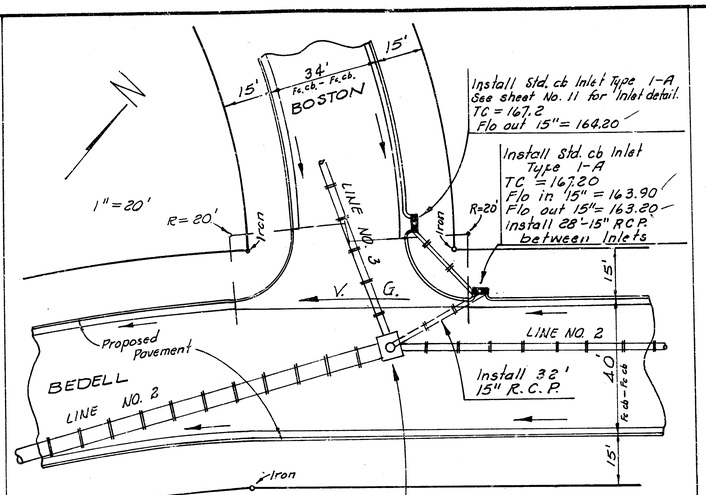

NOTE:
Alternate
15" C. M. P.

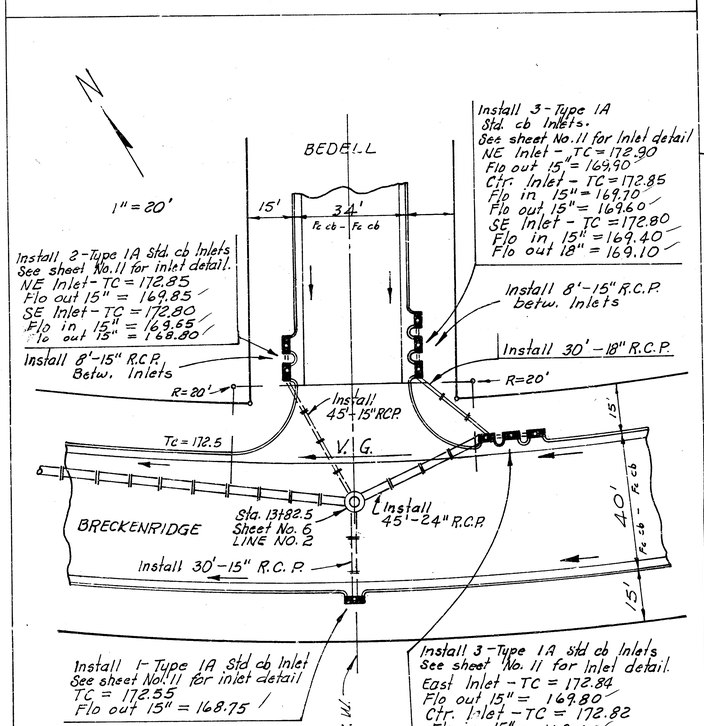

NOTE:
Alternates
15" C. M. P.
18" C. M. P.
24" C. M. P. Fully paved.

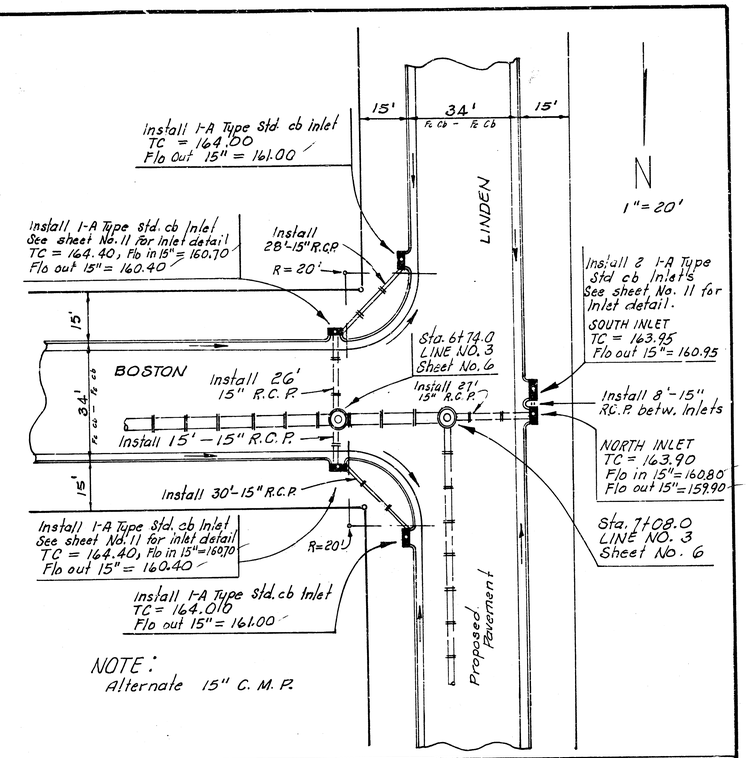

NOTE:
Alternate 15" C. M. P.

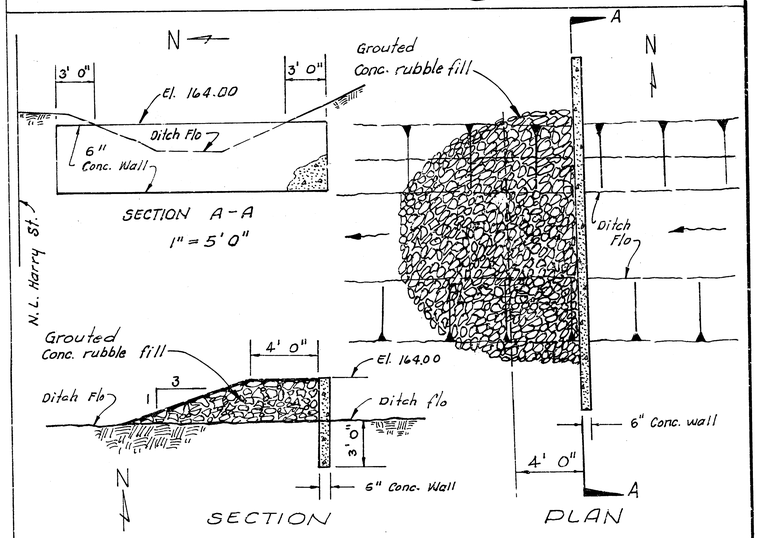

SPECIAL DITCH PLUG
Sta. 14+75.0
LINE NO. 1
Sheet No. 3

Scale 1/4" = 1'0"

S. W. S. NO. 109
PROJECT NO. D BKA 57 4052

13/14
14

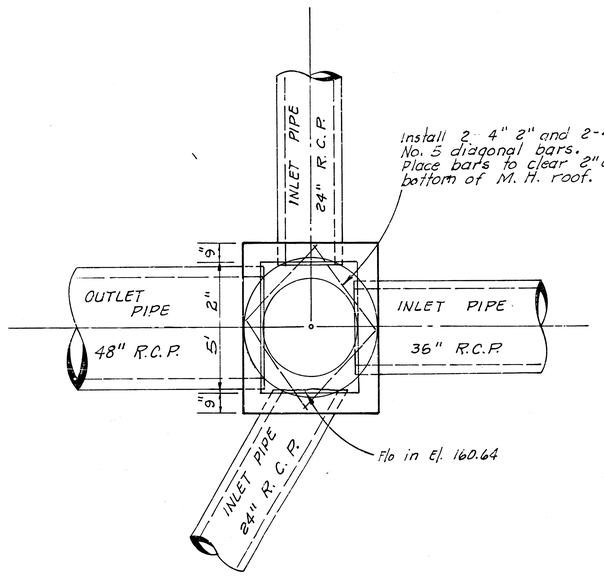

PLAN SECTION THRU WALLS
Sta. 14+83.9
LINE NO. 1
Sheet No. 3

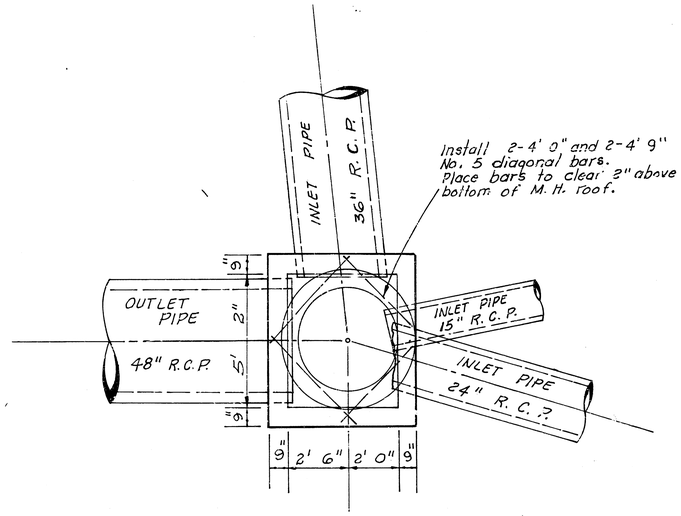

PLAN SECTION THRU WALLS
Sta. 7+87.0
LINE NO. 2
Sheet No. 5

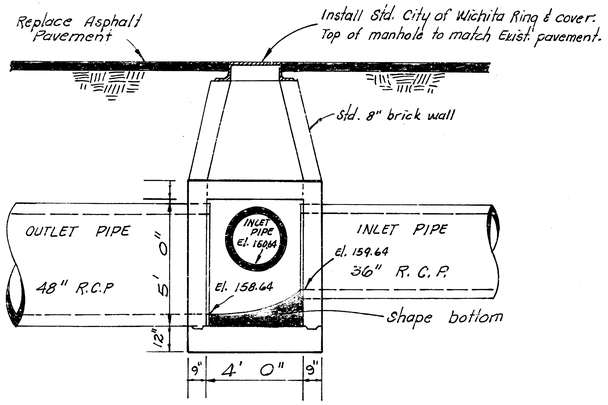

STD. REINF. CONC. M.H.
TYPICAL ELEVATION SECTION
Sta 14+83.9
LINE NO. 1
Sheet No. 3
Scale 3/8" = 1'0"

NOTE: See sheet No. 9 for Typical Steel pattern.

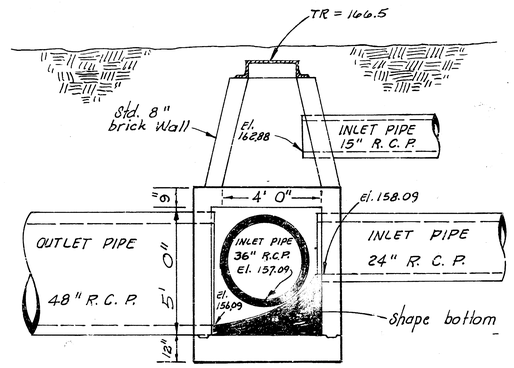

STD. REINF. CONC. M.H
TYPICAL ELEVATION SECTION
Sta. 7+87.0
LINE NO. 2
Sheet No. 5
Scale 3/8" = 1'0"

S. W. S. NO. 109
PROJECT NO. DBKA 574052

14/14