STORM WATER SEWER NO. 145

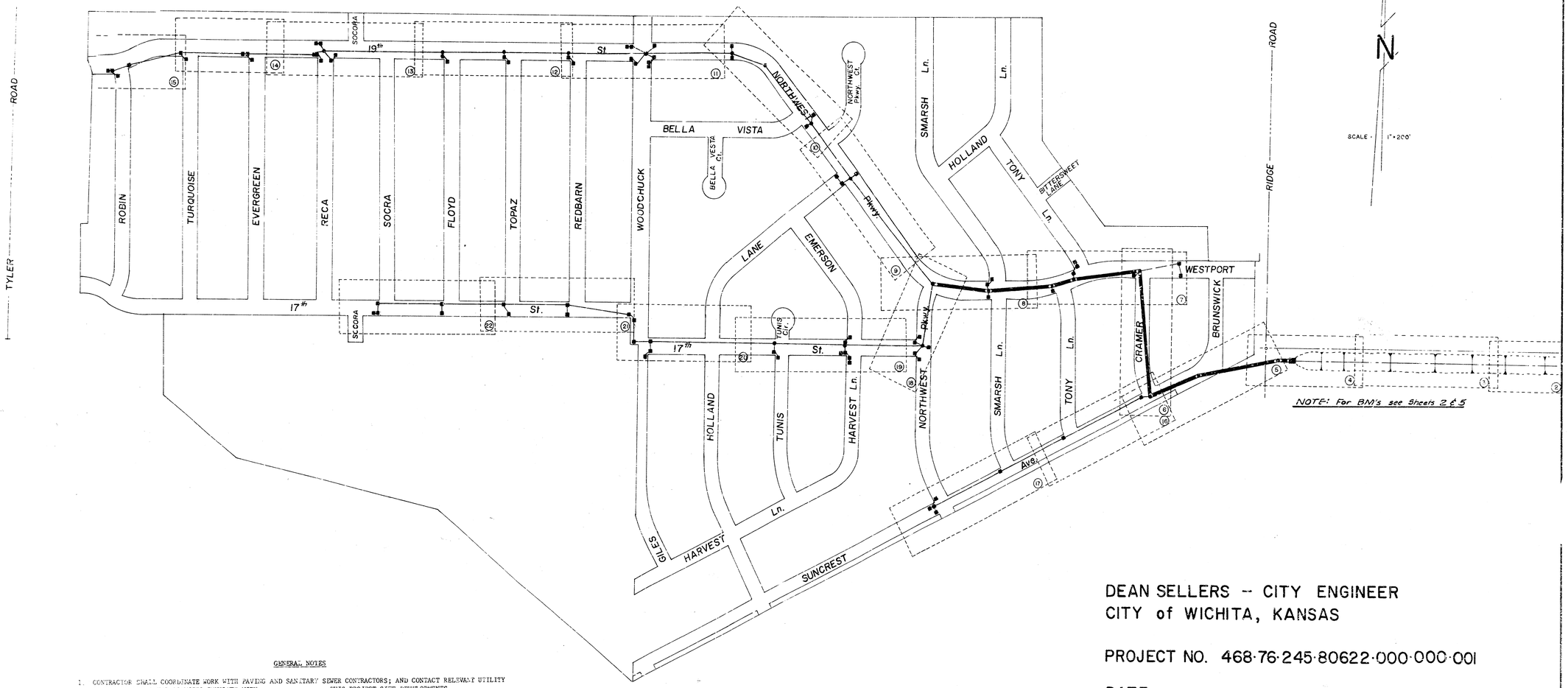

GENERAL NOTES

1. CONTRACTOR SHALL COORDINATE WORK WITH PAVING AND SANITARY SEWER CONTRACTORS; AND CONTACT RELEVANT UTILITY COMPANIES AND OTHER AGENCIES INVOLVED WITH THIS PROJECT SITE DEVELOPMENTS.
2. FIELD ENGINEER SHALL TAPE TIES ON ALL IRONS AND THIMBLES IN THE PROJECT AREA PRIOR TO CONSTRUCTION. FIELD ENGINEER SHALL REPLACE ALL SUCH IRONS AND THIMBLES DISTURBED DURING CONSTRUCTION.
3. THE CURB INLETS AS NOTED ON THE PLANS MAY VARY FROM PROPOSED PAVING PLANS. THE FIELD ENGINEER SHALL LOCATE CURB INLETS WITH REFERENCE TO PROPOSED PAVING PLANS OF THE PERTINENT STREETS.
4. ALL CONCRETE SHALL BE "6-SACK CONCRETE" UNLESS OTHERWISE NOTED.
5. CONTRACTOR SHALL HAVE THE OPTION TO INSTALL PRE-CAST TYPE I-A CURB INLET IN LIEU OF THE BRICK TYPE CONSTSUCTION, SEE STANDARD DETAIL PRE-CAST TYPE I-A INLET DATED AUGUST, 1979.
6. CONTRACTOR SHALL AVOID UNCOVERING EXISTING WATERLINES UNLESS ABSOLUTELY NECESSARY. UNCOVERING SHALL BE DONE ONLY IN THE PRESENCE OF A WATER DEPARTMENT ENGINEER.

BENEFIT DISTRICT

All Lots in Blocks 1, 2, 3, 4, 5, 6, 7, 8, 9, 10, 11, 13, and Lots 9 through 18 inclusive in Block 12; all in Westlink Village 16th Addition. Also all Lots in Blocks 1, 2, 3, 4, 5, 6, 7, 8, 10, 11, 12, 13, 14, 15, and Lots 1 through 7 inclusive in Block 9, all in Westwood Heights 2nd Addition. Also all Lots in Blocks A, B, C, D, E, and Lots 2 through 16 inclusive in Block F, all in Westridge Village Addition. And also an unplatted tract of land in the Southwest Quarter, Section 9, Township 27 South, Range 1 West of the 6th P.M., more fully described as beginning at a point on the east line of said Southwest Quarter, said point being one thousand three hundred thirty-nine and forty-eight hundredths (1339.48) feet South of the Northeast Corner of said Southwest Quarter; thence North along the east line of said Southwest Quarter a distance of one thousand three hundred thirty-nine and forty-eight hundredths (1339.48) feet to the Northeast Corner of said Southwest Quarter; thence West along the north line of said Southwest Quarter a distance of two thousand thirty and seventy-one hundredths (2030.71) feet; thence with a deflection to the left of ninety (90) degrees a distance of two hundred twenty (220) feet; thence with a deflection to the left of fifty-two (52) degrees a distance of four hundred (400) feet; thence with a deflection to the left of twenty-five (25) degrees a distance of eight hundred seventy-five (875) feet; thence Southeasterly to the point of beginning.

DEAN SELLERS -- CITY ENGINEER
CITY of WICHITA, KANSAS

PROJECT NO. 468-76-245-80622-000-000-001

DATE

INDEX

1	COVER SHEET
2-22	PLAN-PROFILE SHEET
23	TYPE I-A CURB INLET
24	REINFORCED CONCRETE MANHOLE
25	SEWER APPURTENANCES
26	TYPE 22 CURB INLET
27	REINFORCED CONCRETE BOX & HEADWALL DETAIL
28-32	CROSS-SECTION SHEETS

STEPHEN R. LACKEY LICENSED PROFESSIONAL ENGINEER

B.M. 192.81 City Std. 42' N. & 38.5' E. of ¼ Sec., Iron on Ridge just N. of Suncrest & Ridge

B.M. 132.56 R.R. Spk East Side of P.P. 50' N. 1258 E of ¼ Sec Iron on Ridge Just N. of Suncrest & Ridge.

B.M. 172.98 City Std. 31' So & 36' E. of ¼ Sec Cor. Tyler & 17th St.

B.M. 171.93 R.R. Spk. East Side of P.P. S.W. Cor Tyler & 19th St. 1st P.P. No. of 1902 N. Tyler

SCALE 1" = 20'

N

130' K.G. & E. Eas'mt.

Sta. 2+40 Begin Constr. 1352' E. and 59' S. of NW Cor. of SW ¼, Sec. 10, 27S, R1W

Remove Hedge Row. Limits to be determined by field engineer.

Constr. 8' Bottom 4:0:1 Sides Channel

Δ = 1°20'12"

P.I. Sta. 5+50

Earthwork Limit Line

148.26' Drainage Eas'mt @ Sta. 4+35.00

112.98' Drainage Eas'mt Sta 4+14.91

¼ Sec. Line

B.R. 1.4

¼ Sec. Line

B. Ray Bice
J.D. Hartland
11-72

CAUTION:
138,000 Volt Hi Line
Do Not Use Heavy Equip. in K G & E Eas'mt
Before Contacting Gary Benson of K G & E

Seed areas east of Ridge Road within drainage easement where turf has been removed. Limits to be determined by field engineer.

Sta. 2+49 Begin Constr. 1352' E. and 59' S. of NW Cor. of S.W. ¼, Sec. 10, 27 S., R1W

Sta. 6+00 Match Line

Natural Ground

R. Channel

350' of 8' Bottom, 4:0:1 Sides Channel @ 0.36 %

184.87'

125.05 | 123.41 | 123.77 | 126.13

135
130
125
120

135
130
125

1 2 3 4 5 6

Sheet 2 of 23

S.W.S. # 145 Line i

B. ROWSOR
D. WHITELAND

11 TH
3 RD

D.F. 24

112.98' Drainage Easmt
Sta. 6+14.91

Ditch Varies
5.9' @ Sta. 5+50.16
4.5' @ Sta. 11+50

112.73' Drainage Easmt
Sta. 7+75.91

Ex. Hwork Limit Line

Constr. 8' Bottom 4.0:1 Sides Channel

137.46' Drainage Easmt
Sta. 9+58.70

Sta 10+00

Warp from 4.0:1
to 3.5:1 Sides

Sta 10+50

Constr. 8' Bottom 3.5:1 Sides Channel

P.I. 11+50

Δ: 1°20'12"

22.81' Drain. Easmt
Sta. 11+20.13

45'

1/4 Sec. Line

1/4 Sec. Line

SCALE: 1"=20'

N

Sta 4+00 North Line

Natural Ground

Sta 12+00 North Line

135
130
125
120

Ex. Channel

Sta 10+00

Sta. 10+50

400' of 8' Bottom, 4.0:1 Sides Channel @ 0.36 %

50' of 8' Bottom,
Warp from 4.0:1 to
3.5:1 Sides Channel @ 0.36%

150' of 8' Bottom, 3.5:1 Sides Channel @ 0.36 %

126.13 | 126.49 | 126.85 | 127.21 | 127.57 | 127.93 | 128.29

6 | 7 | 8 | 9 | 10 | 11

Sheet 3 of 23

SWS # 195 Line 1

B. PHILBRICK
J. O'NEIL/FAIRLAND
11/79
5/80

Sta. 13+00
End Channel, Begin Apron

Sta. 13+12
End Apron, Begin 8'x4'6" RCB

N 89°31'02" E

Constr. Type 3 Rip-Rap

8' Ditch 3.5:1 Sides

Earthwork Limit Line

45'

45'

12

18

13

30'

Constr. Headwall
See Sheet 27

Constr. 8'x4'6" RCB

14

15

Existing Drainage

P.I. Sta. 13+00

1/4 Sec. Line

BK 64

80' R/W

ROAD

P.I. 15+50
Δ: 7°34'23" (50' Sa & 50 L
of 1/4 Sec. Cor.)

Saw Joint

8'x4'6" RCB (See Sheet 5)

16

Replace with
9" Bit. Base Asphalt

Saw Joint

Remove & Replace
110 S.Y. Asphalt Pvt.

N 0°28'38" W
1/4 Sec. Cor.

Iron

N 89°25'50" E

Iron

Maintain traffic through site!

N 0°26'43" W

RIDGE

SCALE: 1" = 20'

N

145
140
135
130
125

Sta. 12+00 Match Line

Sta. 13+00 End Channel
Start Apron

Sta. 13+12 End Apron
Start 8'x4'6" RCB

Ground Line

Sta. 15+50
Match Line

Fl. of Channel

Type 3 Rip-Rap

12' APRON

100' of 8' Bottom, 3.5:1 Sides Channel @ 0.36 %

188' of 8'x4'6" RCB @ 0.36 %

50' of 8'x4'6" RCB
@ 0.40 %

128.29
128.65
128.65
128.97
128.33
129.53

12
13
14
15

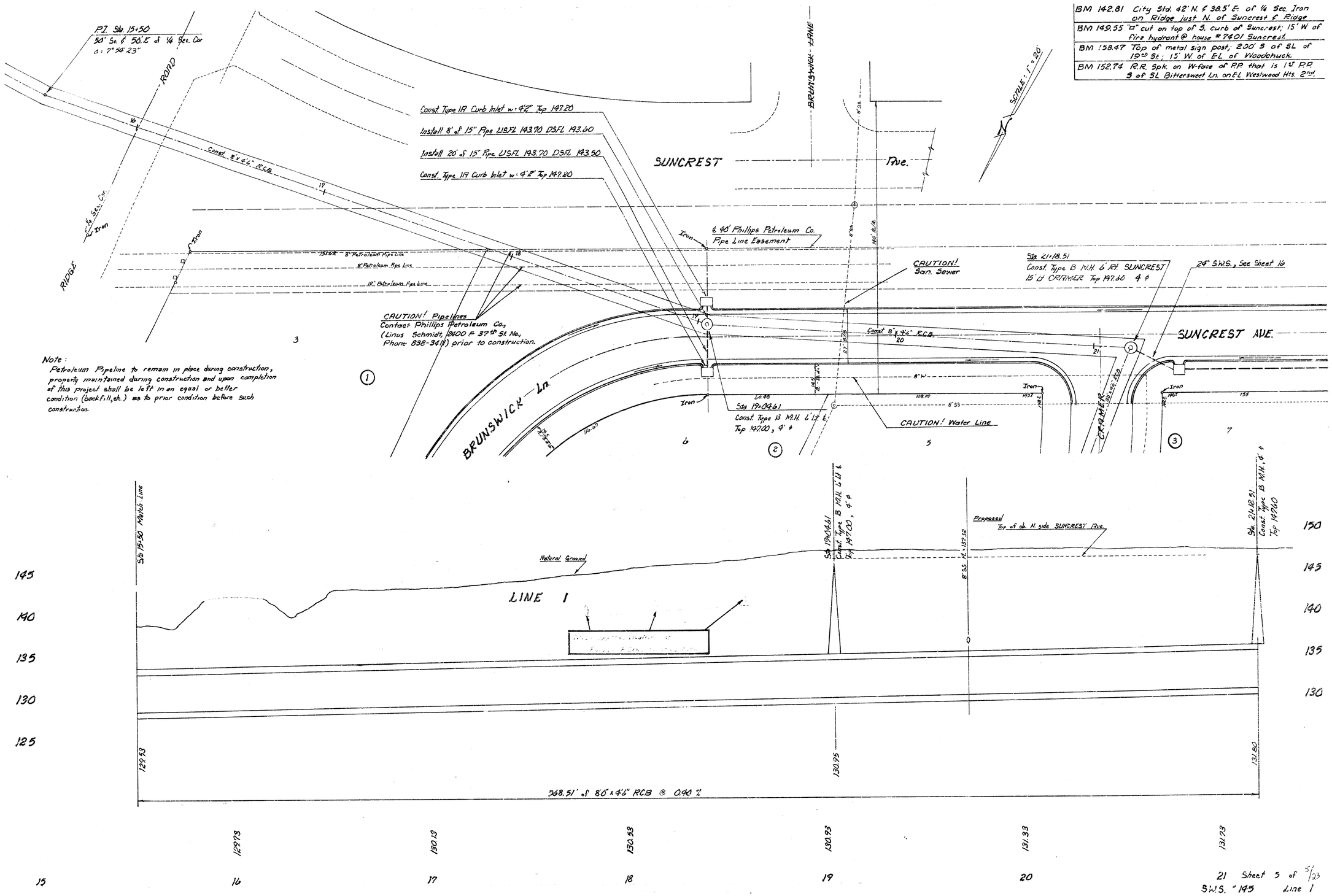

BM 142.81	City Std. 42' N. & 38.5' E. of 1/4 Sec. Iron on Ridge just N. of Suncrest & Ridge
BM 149.55	"□" cut on top of S. curb of Suncrest; 15' W of fire hydrant @ house #7401 Suncrest.
BM 158.47	Top of metal sign post; 200' S of SL of 19th St.; 15' W. of EL of Woodchuck.
BM 152.74	R.R. Spk. on W-face of P.P. that is 1st P.P. S of SL Bittersweet Ln. on EL Westwood Hts. 2nd.

Sheet 5 of 5/23
S.W.S. #145 Line 1

SCALE : 1" = 20'

CAUTION! San. Sewer

CAUTION! Water Line

CRAMER St.

SUNCREST

WESTPORT

Const. 8'x4'6" RCB

24" SWS
See Sheet 16

Sta 21+18.51
See Sheet 5

Sta 24+18.70
See Sheet 7

15" CMP
See Sheet 7

18" SWS
See Sheet 7

CAUTION! Water Line

8'x4'6" RCB

Sta. 21+18.51
See Sheet 5

8" WM Line

8'x4'6" RCB

Natural Ground

Proposed Top of ch. CRAMER St

Sta 24+18.70
See Sheet 7

Line 1

131.80

133.80

500.19' of 8'0" x 4'6" RCB @ 0.40 %

145
140
135
130

152
145
140
135

132.13
132.53
132.93
133.33
133.23

21 22 23 24 25 26

Sheet 6 of 26 32

SWS # 145 Line 1

Const Type 11A Curb Inlet w=4'2" Top 147.70
Install 91' of 15" Pipe US FL 144.30 DS FL 143.85
Const Type 11A Curb Inlet w=4'2" Top 147.70
Install 9' of 15" Pipe US FL 143.80 DS FL 143.75
Sta. 24+54.70
Const Type 11A Curb Inlet w=4'2" Top 147.70
CAUTION! San. Sewer
WESTPORT
Const 18" SWS
Const 80"x42" RCB Sta. Sheet 4
CRAMER
Install 25' of 15" Pipe US FL 145.20 DS FL 144.90
Const Type 11A Curb Inlet w=4'2" Top 148.70
Sta 24+18.70
Const Type B M.H. & L.H. WESTPORT & 15" L.I. CRAMER & 4'ø Top 148.50
CAUTION! Water Line
Const 80"x42" RCB
Sta 28+91.20
Const Type B M.H. & L.H. & 4'ø Top 149.90
Install 13' of 18" Pipe US FL 145.80 DS FL 145.60
Const 80"x42" RCB
CAUTION! Water Line
Const Type 11A Curb Inlet w=4'2" Top 149.80
Install 13' of 15" Pipe US FL 146.30 DS FL 146.00
Const 80"x42" RCB
Sta 29+91.73 Back = Sta 29+79.54 Ahead
Const Type B M.H. & L.H. & 4'ø Top 149.60
Const Type 11A Curb Inlet w=4'2" Top 149.60
Install 28' of 15" Pipe US FL 146.33 DS FL 146.03
TONY LANE
Const Type 11A Curb Inlet w=4'2" Top 149.80
Install 4' of 15" Pipe US FL 145.90 DS FL 145.60
Const Type 11A Curb Inlet w=4'2" Top 149.80
Sta 29+54.7 Const Type 11A Curb Inlet w=4'2" Top 147.70
Sta 24+18.70 Const Type B M.H. & L.H. WESTPORT & 15" L.I. CRAMER & 4'ø Top 148.50
Sta 28+91.20 Const Type B M.H. & L.H. & 4'ø Top 149.90
Sta 29+91.73 Back = Sta 29+79.54 Ahead Const Type B M.H. & L.H. & 4'ø Top 149.60
Sta 30+16 Match Line
Natural Ground
Proposed Top of cb WESTPORT Ave.
Water Line
Line 1
8" SWS Line
149.50
141.86
133.80
134.84
135.23
164' SWS @ -1.00 %
1 #11 18" RCP
1 #12 18" CMP
373.03 of 8'0" x 4'6" RCB @ +0.39 %
80.46' of 8'x4'6" RCB @ 0.40 %
Note Station Equation
143.05
142.05
134.12
134.51
134.90
135.33
135.52
25
26
27
28
29
30
Sheet 7 of 7½
SWS * 145 Line 1

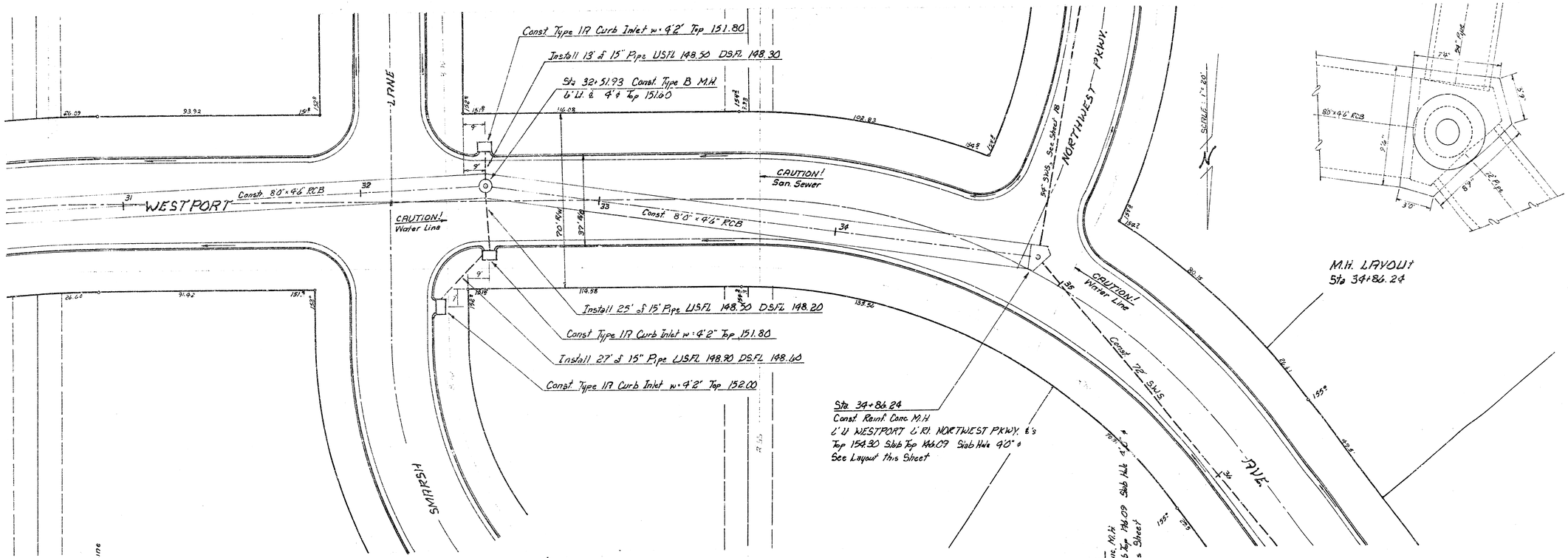

Sheet 8 of 8/13

SWS # 145 Line 1

Install 33' of 15" Pipe U/S Fl. 151.00, D/S Fl. 150.40

Sta 40+36.18
Const. Reinf. Conc. M.H.
C/L & Top 154.90
Slab Top 148.55 Slab Hole 4' ϕ
See Layout This Sheet

Const. Type 1A Curb Inlet w=4'2" Top 154.7

Install 35' of 15" Pipe U/S Fl. 151.95 D/S Fl. 151.10

Const. Type 1A Curb Inlet w=4'2" Top 154.90

HOLLAND LANE

NORTHWEST PARKWAY

Const. 72" SWS

CAUTION! Water Line

Install 25' of 15" Pipe U/S Fl. 151.65, D/S Fl. 151.38

Const. Type 1A Curb Inlet w=4'2" Top 155.10

M.H. LAYOUT
Sta 40+36.18

SCALE 1"=20'

NORTHWEST PKWY.

Sta 36+00 Match Line

Sta 42+90 Match Line

Proposed ℄ of ch. NORTHWEST PARKWAY

Natural Ground

Line 1

Sta 40+36.18
Const. Reinf. Conc. M.H.
Slab Top 148.55 Top 154.9

8" Min. Line

436.18' of SWS @ 0.44%
MH #1 72" RCP
MH #2 72 CMP (fully paved)

203.82' of SWS @ 0.44%
MH #1 72" RCP
MH #2 72" CMP (fully paved)

Sheet 9 of 11

SWS - 145 Line 1

Constr. Type 1R Curb Inlet
w = 4'2", Top 155.10
Install 11' of 15" Pipe
U/S FL 150.88, DS FL 150.65
Constr. 72" SWS
Install 68' of 15" Pipe
U/S FL 151.44 DS FL 150.98
Const Type 1R Curb Inlet
w = 4'2", Top 155.10
6'-BELLO VISTA
CAUTION! Water Line
NORTHWEST PARKWAY
Install 27' of 15" Pipe
U/S FL 151.66, DS FL 151.37
Const. Type 1R Curb Inlet
w = 4'2", Top 155.10
W. NORTHWEST PARKWAY
Sta 43+19.18 Const.
Reinf. Conc. M.H., 6' Lt. 6
Δ = 0° 31' 45", Top 154.9
Slab Top 149.81, Slab Hole 4' ϕ
See Layout this Sheet
M.H. Layout
Sta. 43+19.18
Scale 1" = 20'
M.H. Layout
Sta. 45+95.82
Sta 45+95.82 Const.
Reinf. Conc. M.H. 6' Lt. 6
Δ = 30° 19' 33", Top 155.39
Slab Top 151.05 Slab Hole 3'2" ϕ
See Layout this Sheet
Const Type 1R Curb Inlet
w = 4'2" Top 155.10
Install 11' of 15" Pipe
U/S FL 149.78, DS FL 149.24
Sta 47+33.01 Const.
Reinf. Conc. M.H. 6' Lt. 6
Δ = 21° 24' 35", Top 154.90
Slab Top 151.68, Slab Hole 3'2"
See Layout this Sheet
19th St.
Constr. 72" SWS
R=193.93'
Install 23' of 15" Pipe
U/S FL 149.78, DS FL 149.24
Const Type 1R Curb Inlet
w 4'2", Top 155.10
M.H. Layout
Sta. 47+33.01

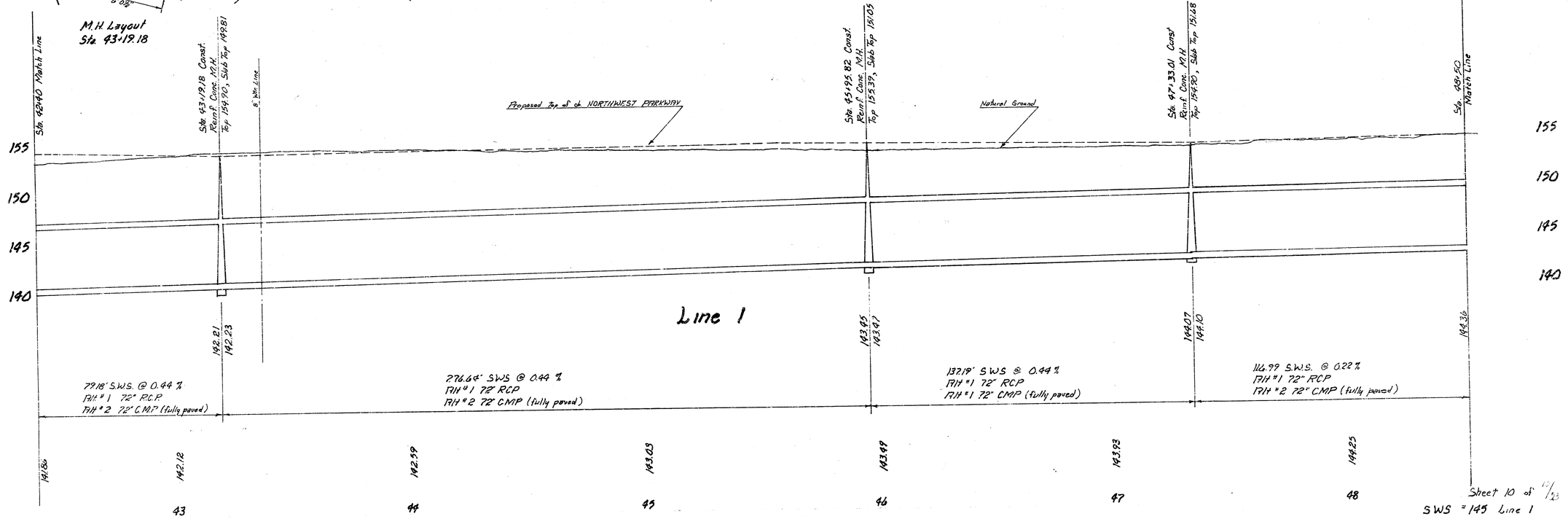

Sheet 10 of 17/23

SWS #145 Line 1

Const. Type 117 Curb Inlet, w = 4'2", Top 155.90

Install 4' of 15" Pipe US FL 150.95, DS FL 150.90

Const Type 117 Curb Inlet, w = 4'2", Top 155.90

Install 30' of 15" Pipe US FL 150.30, DS FL 150.00

Const. 117 Curb Inlet, w = 4'2", Top 155.20

Install 37' of 18" Pipe US FL 149.82, DS FL 149.68

Install 45' of 15" Pipe US FL 149.93 DS FL 149.68

Const Type 117 Curb Inlet w = 4'2", Top 155.90

Install 28' of 15" Pipe US FL 150.31 DS FL 150.03

Const Type 117 Curb Inlet w = 4'2" Top 155.20

Install 4'-5" of 15" Pipe US FL 150.50 DS FL 150.40

Cons. Type 117 Curb Inlet w = 4'2" Top 155.20

Const. 72" SWS

Const. 60" SWS

19th St.

CAUTION! Water Line

CAUTION! Water Line

REDBARN

Sta. 51+30.63
Const. Reinf. Conc. M.H. & Sa. & 19th and & E. & WOODCHUCK Top 155.00
Slab Top 152.56, w = 5'3", L = 13' Slab Hole 3'2" ϕ

Install 91' of 15" Pipe US FL 150.14, DS FL 149.73

Const Type 117 Curb Inlet w = 4'2", Top 155.20

WOODCHUCK

Install 56' of 15" Pipe US FL 150.29, DS FL 149.73

Const Type 117 Curb Inlet w = 4'2" Top 155.20

Install 4' of 15" Pipe US FL 150.05 DS FL 150.30

Const Type 117 Curb Inlet w = 4'2", Top 155.20

Const Type 117 Curb Inlet w = 4'2" Top 156.9

Install 32' of 15" Pipe US FL 152.63 DS FL 152.34

Const Type 117 Curb Inlet w = 4'2" Top 156.70

Install 11' of 15" Pipe US FL 152.26 DS FL 152.00

Sta 54+51.66
Const. Reinf. Conc M.H. & & & Top 156.50, Slab Top 154.50
w = 5'3", L = 8'0", Slab Hole 3'2" ϕ

Sta 98+50 Match Line

Proposed Top of ch 19th St.

Natural Ground

12 Wtr. Line

Sta. 51+30.63 Const. Reinf. Conc. M.H. Top 152.56

Prop. 8" San. Sewer Pr. 151.7

8" Wtr. Line

Sta 54+51.66 Reinf. Conc. M.H. Slab Top 154.50 Top 156.50

Line 1

280.68' S.W.S. @ 0.22%
RH # 1 72" RCP
RH # 2 72" CMP (fully paved)

327.48 SWS @ 0.20%
RH # 1 60" RCP
RH # 2 60" CMP (fully paved)

144.36 144.47 144.69 144.91 144.98 145.09 145.23 145.43 145.03 143.73 143.00

49 50 51 52 53 54

Sheet 11 of 11/33

SWS # 145 Line 1

W.L. REDBARN

Sta 54+51.66
See Sheet 11

CAUTION! Water Line

Sta 57+21.16
Const. Reinf. Conc. M.H. & L.H. ℄
Top 158.40 Slab Top 156.37
w = 5'3", L = 8'0", Slab Hole 3'2" ϕ

TOPITZ

FLOYD

CAUTION! Water Line

Sta 59+91.16
Const. Reinf. Conc. M.H. & L.H. ℄
Top 161.30 Slab Top 156.72
w = 5'3", L = 8'0", Slab Hole 3'2" ϕ

19th St.

Const Type 1.7 Curb Inlet w = 4'2" Top 158.80

Install 29' of 15" Pipe USFL 155.53 DSFL 155.26

Const Type 1.7 Curb Inlet w = 4'2" Top 158.60

Install 11' of 15" Pipe USFL 155.46 DSFL 153.93

Const Type 1.7 Curb Inlet w = 4'2" Top 161.70

Install 29' of 15" Pipe USFL 158.43 DSFL 158.16

Const Type 1.7 Curb Inlet w = 4'2" Top 161.50

Install 11' of 15" Pipe USFL 158.06 DSFL 157.76

SCALE 1"=20'

Sta 54+51.66 Match Line
See Sheet 11

Sta 57+21.66 Const. Reinf. Conc. M.H.
Top 158.40 Slab Top 156.32

8" WL Line

Natural Ground

Proposed top of ob. 19th St

Line 1

8" WL Line

Sta 59+91.66 Const. Reinf. Conc. M.H.
Top 161.30 Slab Top 156.12

Sta 60+80 Match Line

160
155
150
145
140

145.23
148.00

148.84
148.87

151.22
151.29

151.28

210' SWS @ 0.68 %
Pit # 1 60" RCP
Pit # 2 60" CMP (fully paved)

270' SWS @ 0.50 %
Pit # 1 60" RCP
Pit # 2 60" CMP (fully paved)

88.34' SWS @ 0.50 %
Pit # 1 60" RCP
Pit # 2 60" CMP (fully paved)

148.33 | 149.01 | 149.69 | 150.26 | 150.76 | 151.28

55 | 56 | 57 | 58 | 59 | 60

SWS # 165 Line 1

Const. Type 11A Curb Inlet w=9'2" Top 161.70

Install 29' of 15" Pipe USFL 158.39 DSFL 158.10

Const. Type 11A Curb Inlet w=9'2" Top 161.50

Const. Type 11A Curb Inlet w=9'2" Top 161.70

Install 29' of 15" Pipe USFL 158.34 DSFL 158.05

Sta 65+37
Const. Type 22 Curb Inlet
w=5'6", L=10'6", Top 161.95

Const. 34" SWS

Const. 42" SWS

CAUTION! Water Line

CAUTION! Water Line

19th St.

SOCORRO

RECA

SCALE: 1"=20'

Install 38' 18" Pipe USFL 157.85 DSFL 157.28

Sta 64+99.79
Const. Reinf. Conc. M.H. 6'Lt. ϕ
Top 161.28 Slab Top 160.20 Slab Hole 3'2" ϕ
See Layout this Sheet

Const. Type 11A Curb Inlet w=9'2" Top 161.95

Install 9' of 15" Pipe USFL 157.67 DSFL 157.57

Const. Type 11A Curb Inlet w=9'2" Top 161.95

Install 38' of 21" Pipe USFL 157.41 DSFL 157.03

M.H. LAYOUT
Sta 64+99.79

Sta 20+80 Match Line

8" Wtr. Line

Proposed Top of ch. 19th St

Natural Ground

Line 1

8" Wtr. Line

Sta 64+00.16
Const. Reinf. Conc. M.H. 6'Lt. ϕ
Top 159.80 Slab Top 159.81

Sta 65+37
Const. Type 22 Curb Inlet
w=5'6", L=10'6", Top 161.95

Sta 66+00
Match Line

160
155
150

151.68

920.16 SWS @ 0.50 %
MH # 1 60" RCP
MH # 2 60" CMP (fully paved)

153.78
155.28

36.84' SWS @ 0.57 %
MH # 1 42" RCP
MH # 2 42" CMP (fully paved)

155.48
156.00

163.00 SWS @ 0.70 %
MH # 1 36" RCP
MH # 2 36" CMP (fully paved)

151.78 | 152.28 | 152.78 | 153.28 | 153.78 / 155.28 | 156.03 | 156.53

61 | 62 | 63 | 64 | 65 | 66 | 67

SWS # 195 Line 1

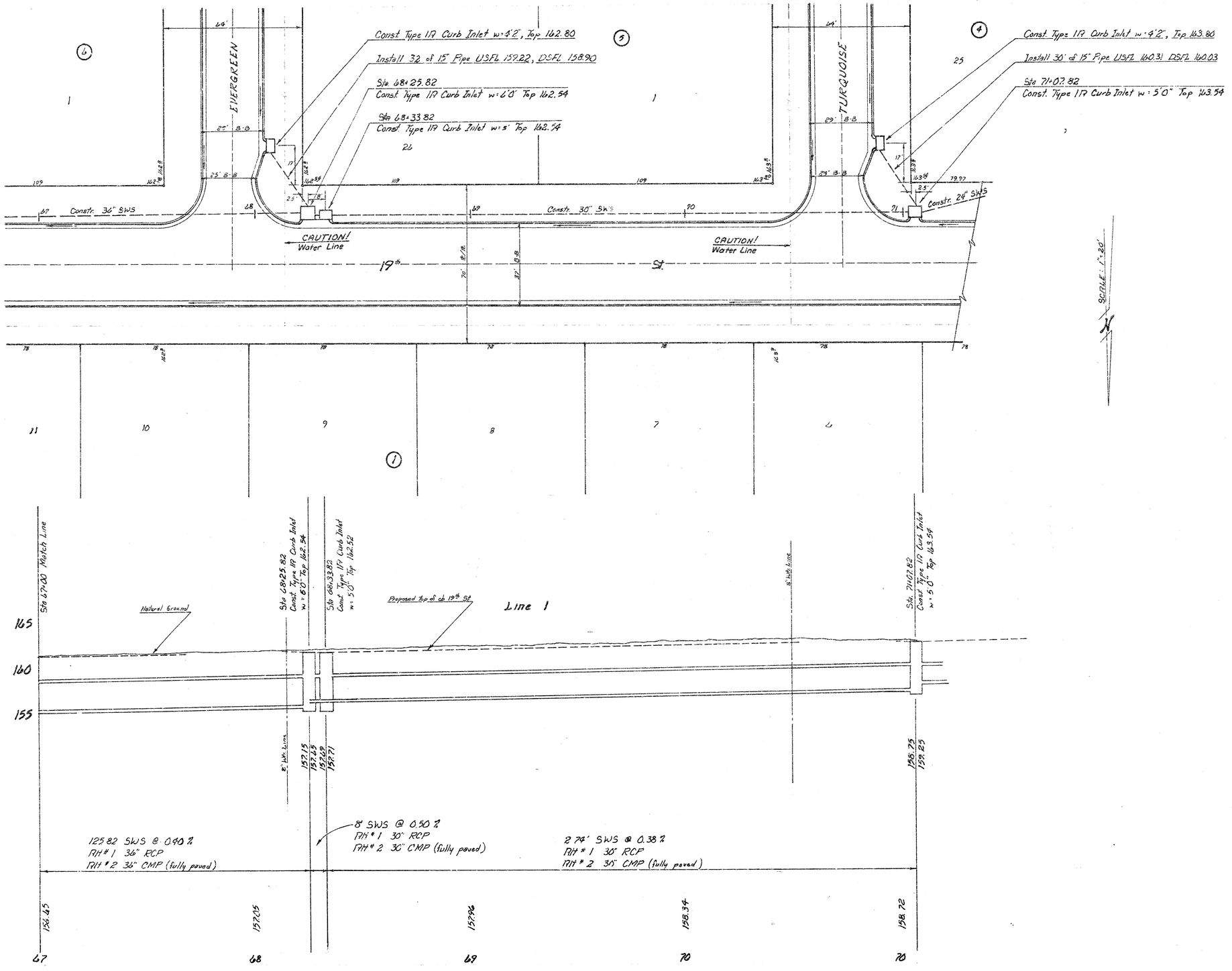

Sheet 19 of 17/20

SWS #145 Line 1

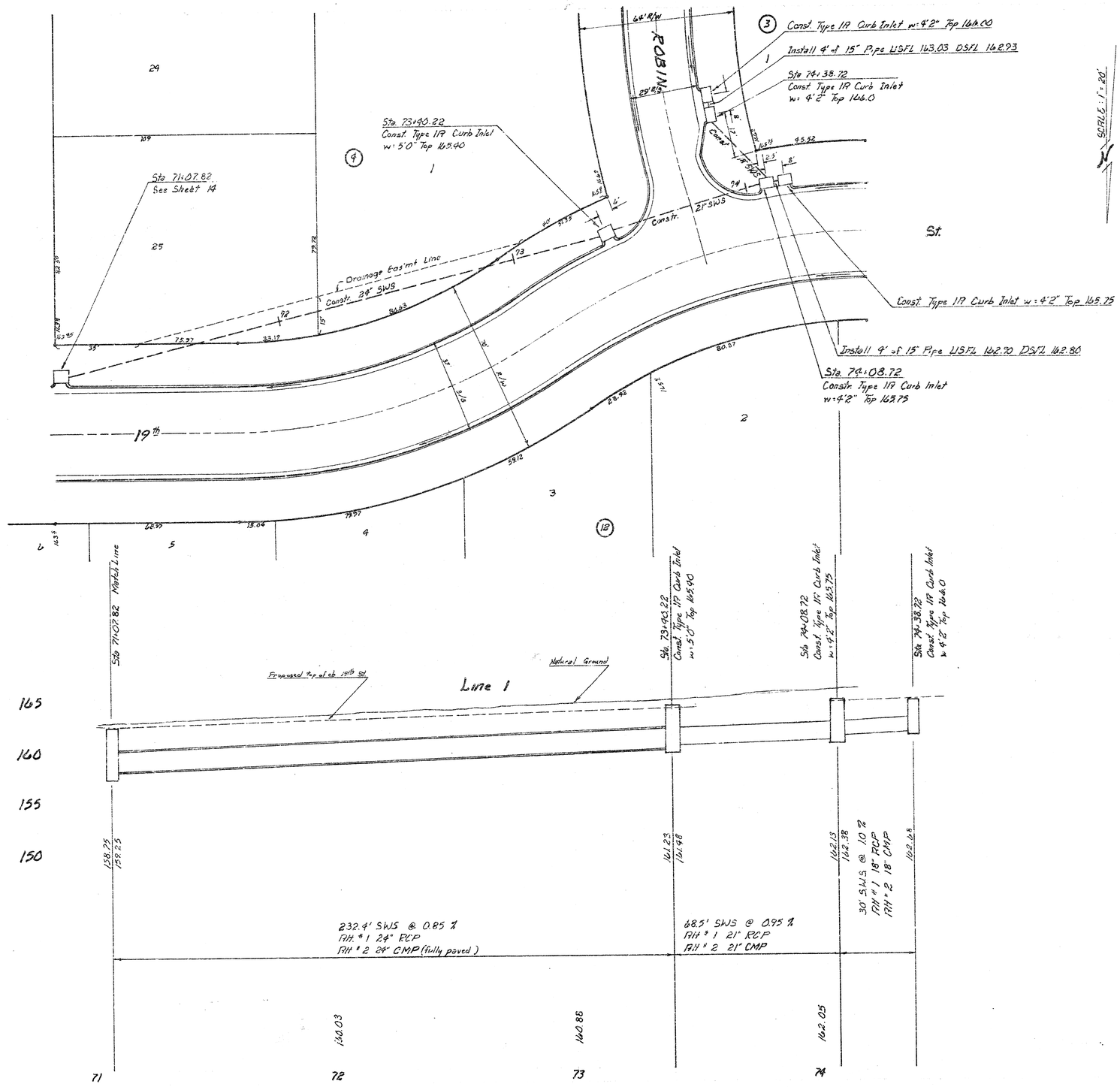

Sheet 15 of 15/23

SWS #145 Line 1

Sta 0+73
See Sheet 5

Sta 1+00
Const Type 17 Curb Inlet
w= 5'0" Top 148.00

Sta 4+70
Const Type 17 Curb Inlet
w= 5'0" Top 149.80

SUNCREST

8'x4'6" RCB (See Sheet 5)

Const. 21" SWS

CAUTION! WATER LINE

60' R/W

31'

18/18

9'

27' 8/8

45' 12/8

CRAMER

Knox-Kidd Const. Sheet 4

TONY

Sta 0+73
See Sheet 5

Sta 1+00
Const. Type 17 Curb Inlet
w=5'0" Top 148.00

Sta 4+70
Const. Type 17 Curb Inlet
w=5'0" Top 149.80

Sta 6+00
North Line

Proposed top of cb SUNCREST

Natural Ground

Line 2

150
145
140
135
130

8'x4'6" RCB
(See Sheet 5)

131.80

143.23
27' SWS @ 1.00 %
RIH # 1 24" RCP
RIH # 2 24" CMP (fully paved)

143.50
143.60

370' SWS @ 0.50 %
RIH #1 24" RCP
RIH #2 24" CMP (fully paved)

125.45
125.70

130' SWS @ 0.50 %
RIH # 1 21" RCP
RIH # 2 21 CMP

144.10
144.60
145.10
145.82
146.35

1
2
3
4
5
6

Sheet 16 of 16/33
SWS # 145 Line 2

SCALE: 1"=20'

Sta. 7+70
Const. Type 1A Curb Inlet
w=4'2" Top 151.20

Const. Type 1A Curb Inlet w=4'2" Top 153.00
Install 31' of 15" Pipe USFL 149.50 DSFL 149.20
Const. Type 1A Curb Inlet w=4'2" Top 153.00
Install 9' of 15" Pipe USFL 149.30 DSFL 149.20
Const. Type 1A Curb Inlet w=4'2" Top 153.00

SUNCREST

Constr. 21" SWS

Constr. 18" SWS

CAUTION! Water Line

CAUTION! Water Line

SWARSEN

NORTHWEST PKWY

Install 27' of 15" Pipe USFL 149.50 DSFL 149.20
Const. Type 1A Curb Inlet w=4'2" Top 153.00

Sta. 6+00 North Line

Sta. 7+20
Const. Type 1A Curb Inlet
w=4'2" Top 151.20

Sta. 10+20
Const. Type 1A Curb Inlet
w=4'2" Top 153.00

Natural Ground

Proposed Top of ch. SUNCREST

Water Line

Line 2

150
145
140

142.20
142.45

148.95

170' SWS @ 0.50 %
MH #1 21" RCP
MH #2 21" CMP

300' SWS @ 0.50 %
MH #1 18" RCP
MH #2 18 CMP

146.35 146.85 147.20 148.10 148.20

6 7 8 9 10 11

Sheet 17 of 17/23
SWS #145 Line 2

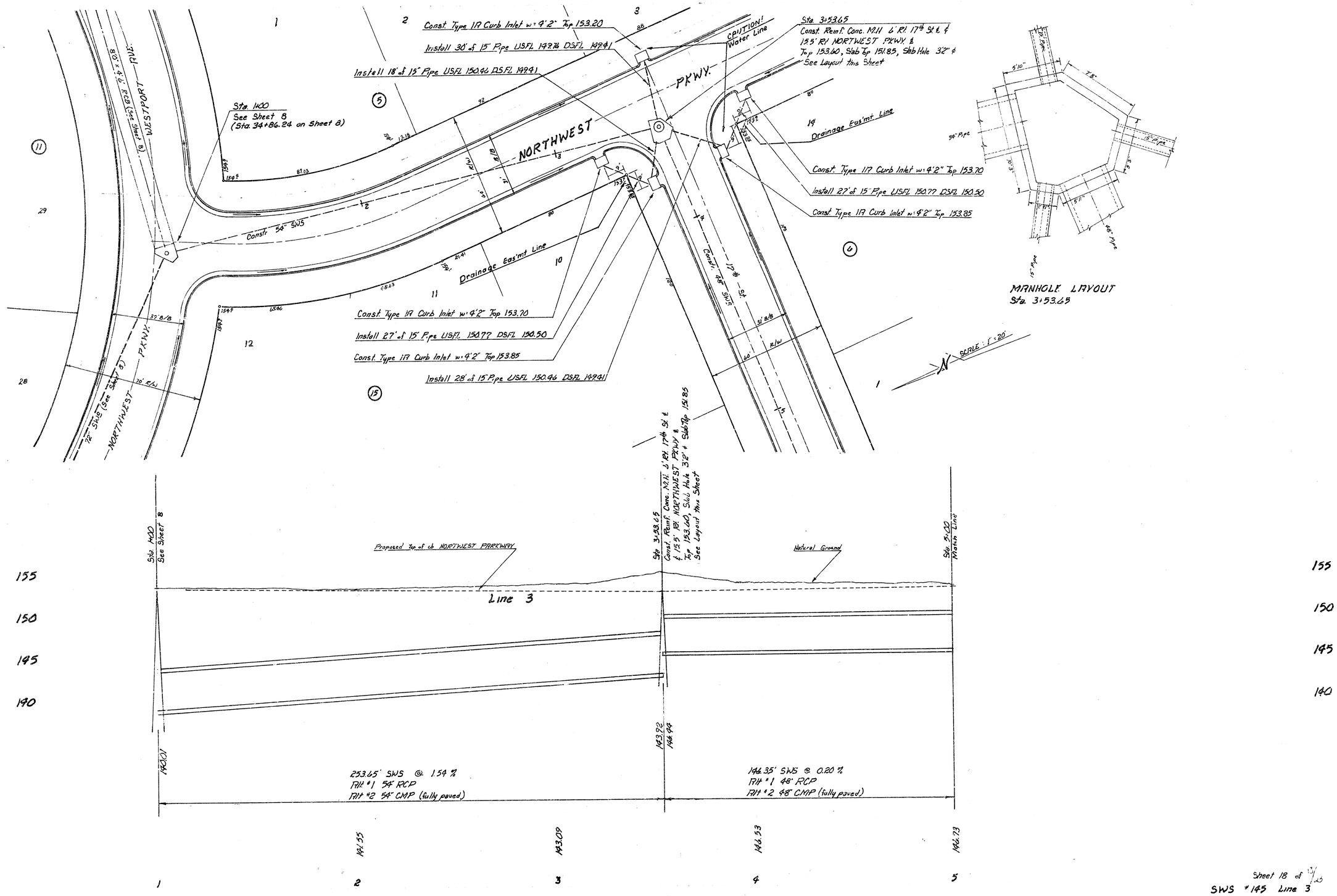

Sheet 18 of 13/20
SWS #145 Line 3

Const. Type 117 Curb Inlet w=4'2" Top 154.70
Install 4' of 15" Pipe USFL 151.81 DSFL 151.76
Const. Type 117 Curb Inlet w=4'2" Top 154.70
Install 27' of 15" Pipe USFL 151.71 DSFL 151.99
Const. Type 117 Curb Inlet w=4'2" Top 154.90
Install 4' of 15" Pipe USFL 151.30 DSFL 151.44
Const. Type 117 Curb Inlet w=4'2" Top 154.90
Install 29' of 18" Pipe USFL 151.19 DSFL 149.83
Const. Type 117 Curb Inlet w=4'2" Top 156.60
Install 27' of 15" Pipe USFL 153.90 DSFL 153.10
Const. Type 117 Curb Inlet w=4'2" Top 156.90
Install 24' of 15" Pipe USFL 152.36 DSFL 151.28
SCALE: 1"=20'
CAUTION! Water Line
CAUTION! Water Line
17th St.
Constr. 48" SWS
Const. 48" SWS
Constr. 42" SWS
TUNIS LANE
HARVEST CIRCLE
Sta 6+77.15
Const Reinf. Conc. MH & Rt. &
Top 154.70 Slab Top 152.52
w=4'2" L=6'10" Slab Hole 3'2" ϕ
Sta 9+72.15
Const Reinf. Conc. MH & Rt. &
Top 156.20 Slab Top 153.72
w=5'2", L=6'10", Slab Hole 3'2" ϕ
Proposed Top of ch 17th St
Natural Ground
Line 3
Sta 5+00 Match Line
Sta 11+00 Match Line
Water Line
Water Line
147.09
147.10
148.29
148.79
177.15' SWS @ 0.20 %
MH # 1 48" RCP
MH # 2 48" CMP (fully paved)
300' SWS @ 0.90 %
MH # 1 48" RCP
MH # 2 48" CMP (fully paved)
122.85' SWS @ 0.90 %
MH # 1 42" RCP
MH # 2 42" CMP (fully paved)
155
150
145
146.73
146.93
147.19
147.59
147.99
148.89
149.29
5
6
7
8
9
10
11
Sheet 17 of 19/23
SWS # 145 Line 3

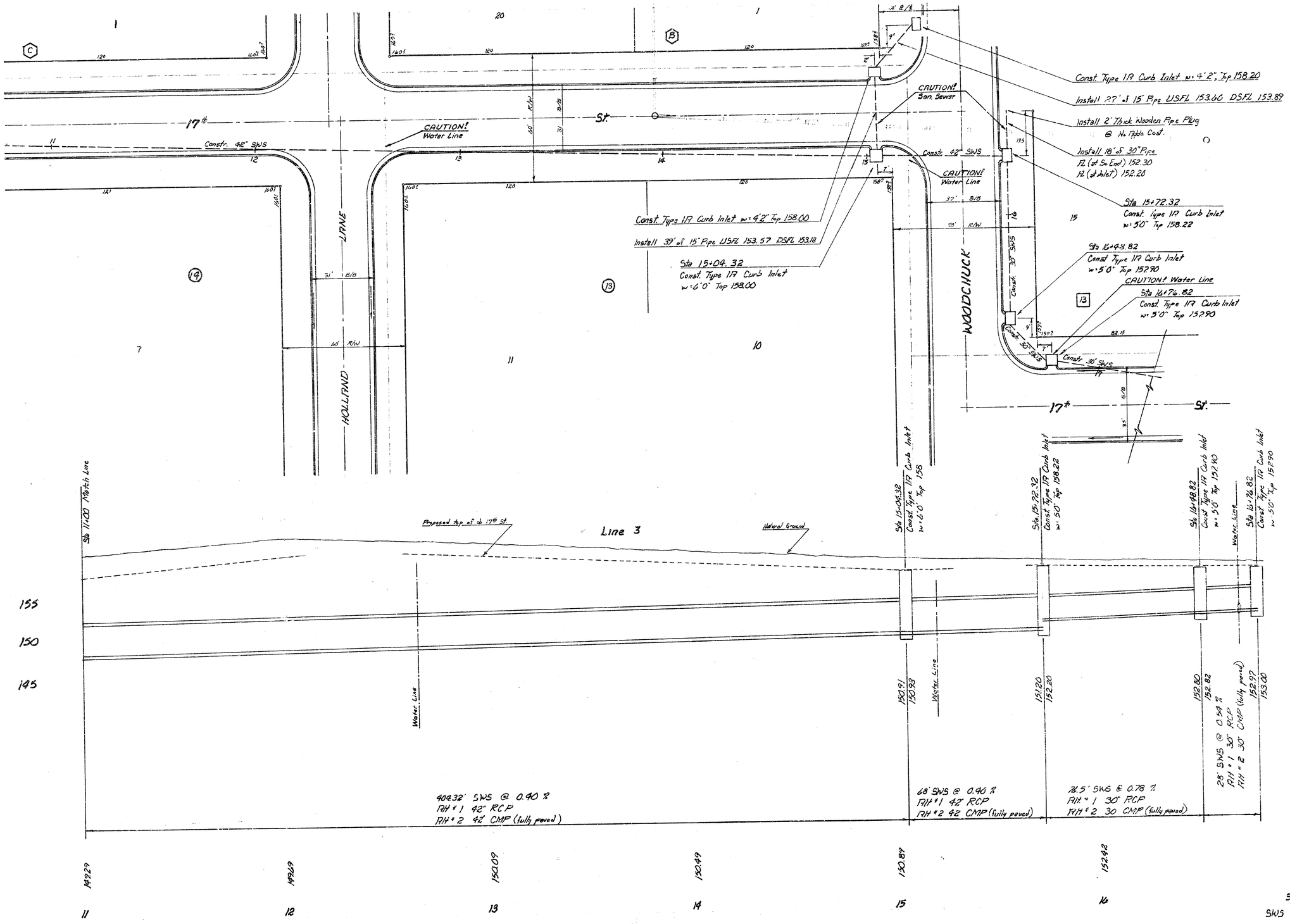

Sheet 20 of 30/23

SWS #145 Line 3

D. DULLEA
J. MAITLAND
9-80

DESIGN

W.L. WOODCHUCK

Sta 16+76.82
See Sheet 20

CAUTION! Water Line

Const. 30" SWS

CAUTION! Water Line

Const. Type 11A Curb Inlet w=9'2" Top 158.81

Install 39' of 15" Pipe USFL 155.30, DSFL 155.69

CAUTION! Water Line

CAUTION! Water Line

Const Type 11A Curb Inlet w=7'2" Top 159.71

Install 99.5' of 15" Pipe USFL 156.67, DSFL 156.22

SCALE 1"=20'

17th St.

Constr. 24" SWS

Constr. 21" SWS

Sta. 19+44.78 Back
Sta 19+50.48 Ahead
Const Type 11A Curb Inlet
w=5'0" Top 158.60

Sta 22+20.98
Const. Type 11A Curb Inlet
w=5'0" Tof 159.70

REDBARN

TOPPER

Sta 16+76.82
See Sheet 20

K&E Underground Cable

8" W.M. Line

Proposed top of cb 17th St.

Line 3

Natural Ground

Sta 19+44.78 Back
Sta 19+50.48 Ahead
Const. Type 11A Curb Inlet
w=5'0" Top 158.60

K&E Underground Cable

8" W.M. Line

Sta 22+20.98
Const. Type 11A Curb Inlet
w=5'0" Top 159.70

K&E Underground Cable

Sta 23+00
March Line

160
155
150

152.97
153.00

159.02
159.55

153.42
153.72

268.46' SWS @ 0.38 %
RM #1 30" RCP
RM #2 30" CMP (fully paved)

270' SWS @ 0.34 %
RM #1 24" RCP
RM #2 24 CMP (fully paved)

79.52' of SWS @ 0.88 %
RM #1 21" RCP
RM #2 21" CMP

153.09 153.47 153.85 154.78 155.06 155.40 156.42

17 18 19 20 21 22 23

CAUTION UNDERGROUND UTILITIES Pacific Gas & Electric Co. or Southwestern Bell Telephone Co. for Location

CAUTION! Water Line

CAUTION! Water Line

17th St.

Const. 21" SWS

Const. 18" SWS

Const. Type 117 Curb Inlet w=4'2" Top 165.35

Install 4' of 15" Pipe USFL 161.60, DSFL 161.50

Const. Type 117 Curb Inlet w=4'2" Top 163.94

Install 39' of 15" Pipe USFL 161.19, DSFL 160.75

CAUTION: Water Lines

St.

Const. Type 117 Curb Inlet w=4'2" Top 162.37

Install 39' of 15" Pipe USFL 158.98, DSFL 158.59

Const. Type 117 Curb Inlet w=4'2" Top 161.90
Sta 24+90.98

Sta 27+60.98
Const. Type 117 Curb Inlet
w=4'2", Top 164.75

FLOYD

SOCORRO

SCALE: 1"=20'

Sta 23+00 Match Point

8" WM. Line

Sta 24+90.98
Const. Type 117 Curb Inlet
w=4'2" Top 162.10

K&F Underground Cable

Proposed top of sb. 17th St.

Natural Ground

8" WM. Line

Sta 27+60.98
Const. Type 117 Curb Inlet
w=4'2", Top 164.75

190.48' SWS @ 0.88 %
RH "1 21" RCP
RH "2 21" CMP

270' SWS @ 0.80 %
RH "1 18" RCP
RH "2 18" CMP

Sheet 22 of 23/33
SWS # 145 Line 3

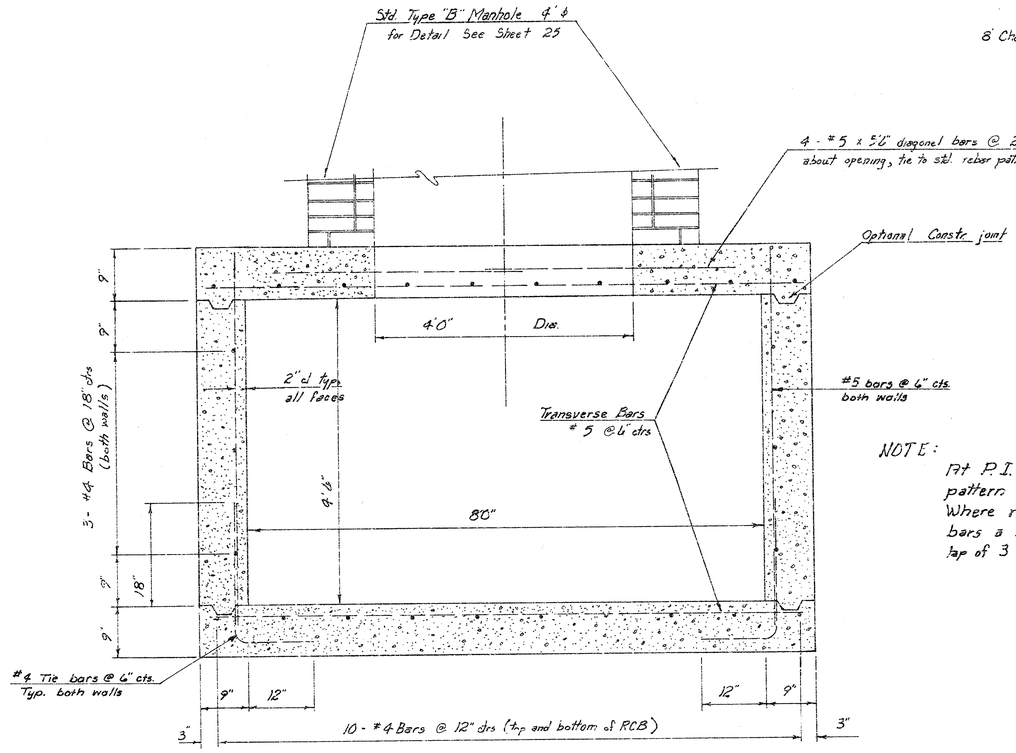

SECTION

8'0" x 4'6" R.C.B. DETAIL

SCALE : 1" = 1'0"

NOTE :
Fill exposed edges to have ½" bevel.

NOTE :
At P.I. of R.C.B., continue rebar pattern to far point of box. Where rebar overlap, cut and tie bars a min. lap of 18" and a min. lap of 3 bar ties.

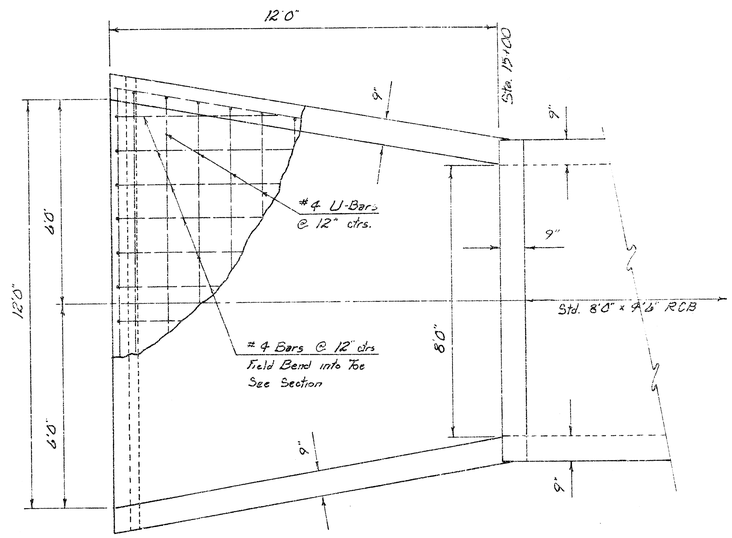

PLAN

HEADWALL @ Sta. 15+00

SCALE : ½" = 1'0"

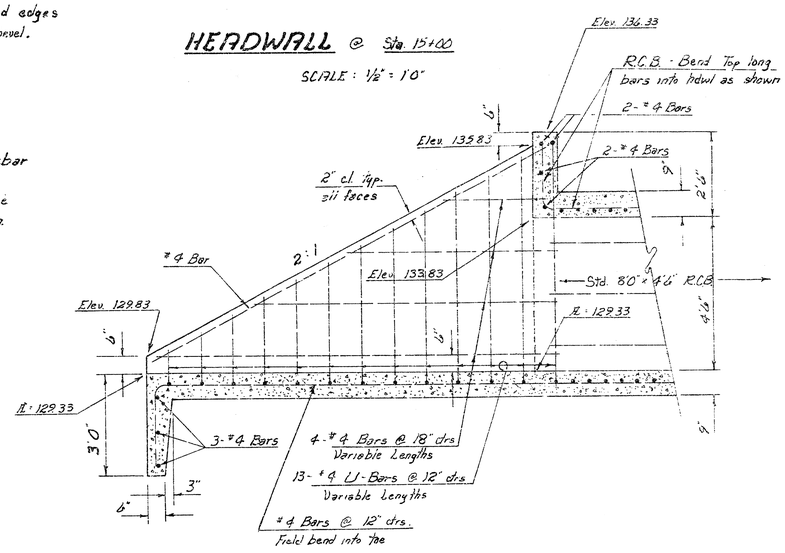

SECTION

SWS #145 RCB & HEADWALL DETAIL