STORM WATER SEWER NO. 199.
OAK CLIFF ESTATES, PHASE I.

CITY OF WICHITA, DEPT. OF ENGINEERING.
PROJ. NO.: 468-76-245-80989-000-000-001.

R. W. BRUGGEMAN.
DIRECTOR OF ENGINEERING/CITY ENGINEER.

N

SCALE: 1" = 200'

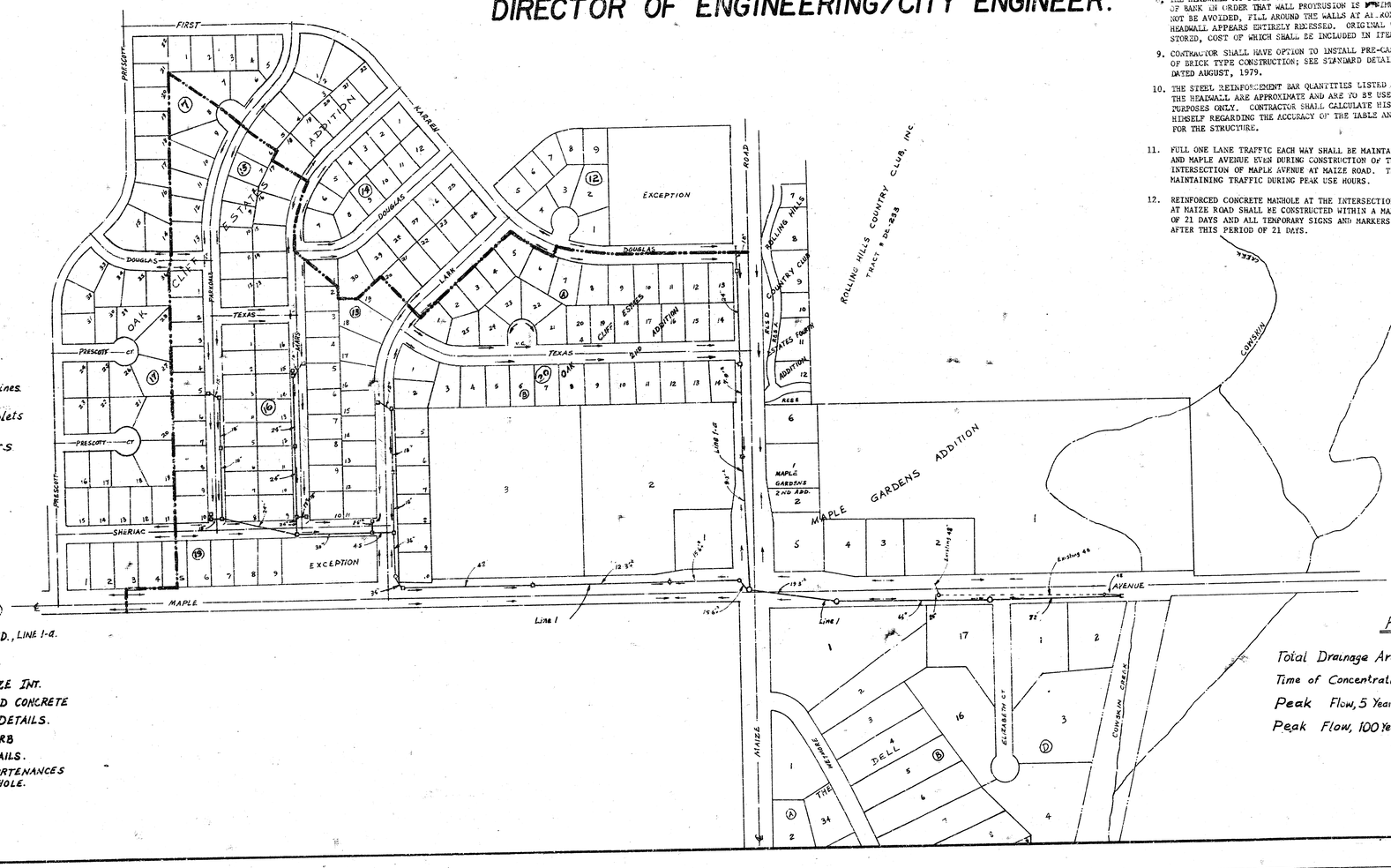

LEGEND

- Benefit District Boundary.
- Lot and Street Right of Way Lines.
- Storm Sewer System with Inlets and Manholes.
- Flow in Street Gutters.

INDEX

SHEET NO. 1. TITLE SHEET
2-10. PLAN AND PROFILE, MAIN LINE (LINE 1)
11-12. PLAN AND PROFILE, LINE IN MAIZE RD., LINE 1-a.
13. STRUCTURAL DETAIL: HEADWALL
14. TRAFFIC PLAN: MAPLE AT MAIZE INT.
15. CITY OF WICHITA STD. REINFORCED CONCRETE MANHOLE DETAILS.
16 CITY OF WICHITA STD. TYPE I-A CURB INLET DETAILS.
17 CITY OF WICHITA STD. SEWER APPURTENANCES TYPE B MANHOLE.

GENERAL NOTES

1. CONTRACTOR SHALL COORDINATE WORK WITH PAVING AND SANITARY SEWER CONTRACTORS AND WHEN NECESSARY CONTACT ALL PERTINENT UTILITY COMPANIES, PARTICULARLY SOUTHWESTERN BELL TELEPHONE AND KANSAS GAS & ELECTRIC COMPANY, AND OTHER AGENCIES INVOLVED WITH THIS PROJECT SITE DEVELOPMENT.
2. FIELD ENGINEER SHALL TAKE TIES ON ALL IRONS AND THIMBLES IN THE PROJECT AREA PRIOR TO CONSTRUCTION. FIELD ENGINEER SHALL REPLACE ALL SUCH IRONS AND THIMBLES DISTURBED DURING CONSTRUCTION.
3. THE LATERAL DISTANCES OF THE CURB INLETS AND MANHOLES NOTED ON THE PLANS ARE APPROXIMATE SINCE THE CURB LOCATIONS SHOWN IN THESE PLANS ARE NOT ACCURATE. THE FIELD ENGINEER SHALL REFER TO PAVING PLANS UNDER CONTRACT FOR LATERAL LOCATIONS OF CURB INLETS AND MANHOLES.
4. THE LOCATION OF THE FLOOD CONTROL LEVEE ALONG THE WEST BANK OF CONSKIN CREEK AND ALONG SOUTH LINE OF MAPLE AVENUE IS AS SHOWN ON SHEETS 2 AND 3 OF THE PLANS. IF THESE LEVEES ARE DISTURBED CONTRACTOR SHALL REPLACE THEM "AS IS" BEFORE CONSTRUCTION. LEVEE REPLACEMENT SHALL BE PERFORMED IN 6" LIFTS OF IDENTICAL MATERIAL COMPACTED TO A MINIMUM DRY DENSITY OF 95 PERCENT WHEN TESTED IN ACCORDANCE WITH METHOD ASTM D-698. THE ORIGINAL GROUND SURFACE, INCLUDING IDENTICAL GRASS COVER, SHALL BE RESTORED TO PROTECT THE LEVEE FROM EROSIVE FORCES OF NATURE. COST OF SUCH ITEM SHALL BE INCLUDED IN COST OF LINEAL FOOT OF PIPE INSTALLED.
5. ALL CONCRETE SHALL BE "6-SACK CONCRETE" UNLESS OTHERWISE NOTED.
6. EARTHWORK FOR AND DOWNSTREAM FROM HEADWALL AND FOR RIPRAP SHALL BE PAID FOR IN ITEMS BID FOR HEADWALL, PIPES AND/OR RIPRAP.
7. TREES TO BE REMOVED ARE MARKED THUS X, EXCEPT THAT ANY TREE MARKED FOR REMOVAL WHICH, IN THE OPINION OF THE ENGINEER, CAN BE SAVED, SHALL BE SPARED. CONTRACTOR SHALL CONTACT EACH PROPERTY OWNER ALONG THE SOUTH LINE OF MAPLE AVENUE (SHEETS 2 AND 3) WHOSE LAWN COULD BE DISTURBED BY THE PROJECT. EVERY ATTEMPT SHALL BE MADE TO RESTORE THE GROUND COVER AS EXISTING BEFORE CONSTRUCTION AT THE DIRECTION OF FIELD ENGINEER. THE ALIGNMENT OF THE STORM SEWER ON SHEETS 2 AND 3 MAY BE SLIGHTLY VARIED AS DIRECTED BY THE FIELD ENGINEER TO AVOID DESTROYING A TREE, TO THE SATISFACTION OF THE ADJACENT PROPERTY OWNER.
8. THE HEADWALL AT PIPES OUTFALL SHALL BE CONSTRUCTED TO ALIGN WITH THE SLOPE OF BANK IN ORDER THAT WALL PROTRUSION IS MINIMUM. WHERE SUCH PROTRUSION CANNOT BE AVOIDED, FILL AROUND THE WALLS AT APPROXIMATELY 5:1 SIDE SLOPES SO HEADWALL APPEARS ENTIRELY RECESSED. ORIGINAL VEGETATION COVER SHALL BE RESTORED, COST OF WHICH SHALL BE INCLUDED IN ITEM BID FOR HEADWALL.
9. CONTRACTOR SHALL HAVE OPTION TO INSTALL PRE-CAST TYPE I-A CURB INLET IN LIEU OF BRICK TYPE CONSTRUCTION; SEE STANDARD DETAIL, PRE-CAST TYPE I-A INLET DATED AUGUST, 1979.
10. THE STEEL REINFORCEMENT BAR QUANTITIES LISTED AND DRAWN ON SHEET NO. 13 FOR THE HEADWALL ARE APPROXIMATE AND ARE TO BE USED STRICTLY FOR INFORMATION PURPOSES ONLY. CONTRACTOR SHALL CALCULATE HIS OWN QUANTITIES TO SATISFY HIMSELF REGARDING THE ACCURACY OF THE TABLE AND THE REINFORCEMENT REQUIRED FOR THE STRUCTURE.
11. FULL ONE LANE TRAFFIC EACH WAY SHALL BE MAINTAINED ON MAIZE ROAD AND MAPLE AVENUE EVEN DURING CONSTRUCTION OF THE MANHOLE AT THE INTERSECTION OF MAPLE AVENUE AT MAIZE ROAD. THIS SHALL INCLUDE MAINTAINING TRAFFIC DURING PEAK USE HOURS.
12. REINFORCED CONCRETE MANHOLE AT THE INTERSECTION OF MAPLE AVENUE AT MAIZE ROAD SHALL BE CONSTRUCTED WITHIN A MAXIMUM TIME LIMIT OF 21 DAYS AND ALL TEMPORARY SIGNS AND MARKERS SHALL BE REMOVED AFTER THIS PERIOD OF 21 DAYS.

HYDROLOGY

Total Drainage Area, A	81.4 Acres.
Time of Concentration, Tc	27.0 Min.
Peak Flow, 5 Year Freq., Q_5	220.0 c.f.s.
Peak Flow, 100 Year Freq., Q_{100}	380.0 c.f.s.

SHEET NO. 1/17

FILMED FROM THE BEST AVAILABLE COPY .....

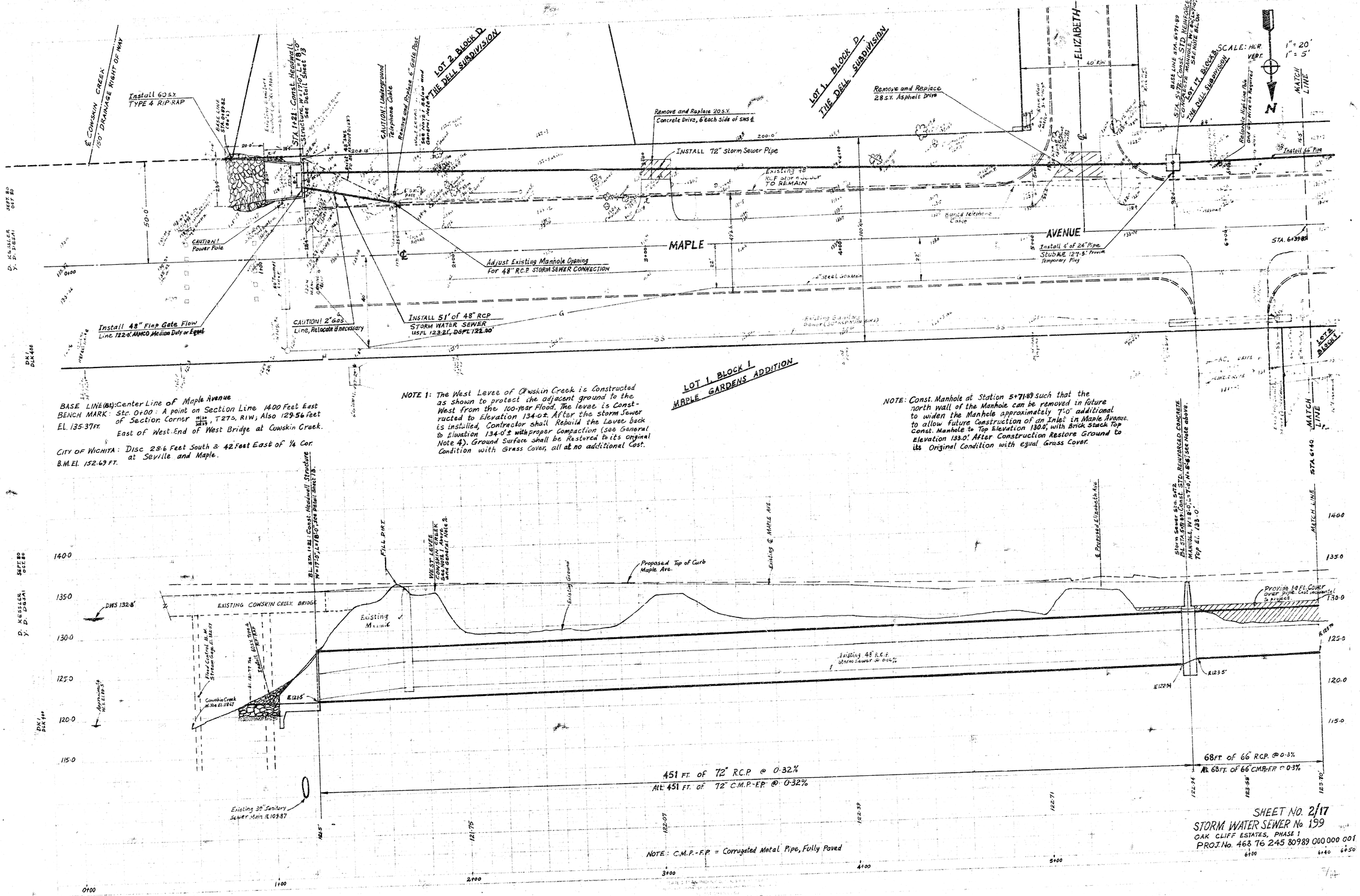

SHEET NO. 2/17
STORM WATER SEWER No. 199
OAK CLIFF ESTATES, PHASE I
PROJ. No. 468 76 245 80989 000 000 001

FILMED FROM THE BEST AVAILABLE COPY.....

SCALE: HOR. 1" = 20'
VERT. 1" = 5'

LOT 17, BLOCK B
THE DELL SUBDIVISION

Install 4 FT. of 24" R.C.P with End Section and 10.5° Type 3 Riprap USFL 126.3'. DSFL 126.2'.

Base Line STA. 7+52; 26' Left: Const. Std. Reinforced Concrete Manhole. W=8'-0" L=6'-0", H=7'-0" without Stack. Top El. 130.7, See Note.

Install 19± LF 48" RCP Extension to RC. Manhole. USFL 124.03' DSFL 124.00.

CONKLIN CREEK DRAINAGE EASEMENT

Install 4' of 48" RCP Extension into Reinf. Concrete Manhole. Flow El. 124.4'

Relocate existing Ditch approximately 8 feet North of the center line of Pipe. Provide 1.0 Foot Cover over pipe. Ensure ditch drains East. Cost is incidental to project.

Relocate Comm. Poles, if Required.

Existing Flood Control Levee Top El. 130.1. If disturbed, Replace Levee "AS IS" before Construction.

Remove and Replace 20 S.Y. Asphalt Drive

Relocate Comm. Pole LF Required.

LOT 1, BLOCK B
THE DELL SUBDIVISION

Base Line STA. 11+11.87, 37.0° L.
STA. 11+12: Const. STD. Reinforced Concrete Manhole, without STACK: W=10'-0", L=8'-0", H=7'-6" Top El. 133.0'. Install Precast Conc. Cover with Ring & Cover.

Remove and Replace 22 S.Y. Asphalt Drive

MATCH LINE STA. 12+78.42

Install 19.5'± SWS Pipe

Install 66" SWS Pipe

Buried Telephone Cables

Relocated Ditch Bottom: Approximate Alignment USFL 127.3 (@ STA. 9+00), DSFL 126.3' (@ STA. 7+58)

MAPLE AVENUE

Remove Existing Headwalls.

Existing Water Line (16" AC)

CAUTION! Underground Telephone Cable Raise Cable for easy installation of Pipe.

LOT 2, BLOCK 1
MAPLE GARDENS ADD.

LOT 3, BLOCK 1
MAPLE GARDENS ADDITION

LOT 4, BLOCK 1
MAPLE GARDENS ADD.

LOT 5, BLOCK 1
MAPLE GARDENS ADD.

NOTE: The Reinforced Concrete Manhole at STA 7+52 shall be Constructed to improve Hydraulics of existing Combined 48" Storm Sewer and Ditch System. The Manhole shall be Constructed to Top Elevation 130.7 with a Precast Concrete Cover including Ring and Cover. When Maple Street is improved to City Standards, this Manhole may be Converted into an Inlet.

MATCH LINE STA. 6+40

Approximate STA. 7+32: Existing 48" RCP End, Flow Line El. 124.0'

EXISTING GROUND

Provide 1.0' cover over top of Pipe. If not, Relocate Ditch to North of pipe at cost incidental to project.

EXISTING @ MAPLE AVE.

Proposed Maple Ave. Top of Curb

STORM SEWER STA. 11+18
BL STA. 11+11.87: Const. STD. Reinforced Concrete Manhole without Stack, W=10'-0", L=8'-0", H=7'-6", Top 133.0' Install Precast Concrete Cover Top 9" Thick

CAUTION! Underground Telephone Cable Approx. El 129.0'. Raise Cable To El 130.3'

CAUTION! Underground Telephone Cable Approx. El 129.5'. Raise Cable to El 131.0'

MATCH LINE STA. 12+80

Seawall

El 125.12'

El 125.1'

472 FT. of 66" R.C.P. @ 0.3%
Alt. 472 FT. of 66" C.M.P.-F.P. @ 0.3%

168 FT. of 48"x76" H.E.R.C.P @ 0.4%
Alt. 168 FT. of 66"x51" C.M.P.A.-F.P. (3x1) @ 0.4%

SHEET NO. 3/17
STORM WATER SEWER No. 199
OAK CLIFF ESTATES, PHASE 1
PROJ. No. 468 76 245 80989 000 000 001

D. KESSLER, KRUG SEPT 80
Y. D. DESAI OCT 80

D.L.N. 400 SK 1

FILMED FROM THE BEST

SCALE: HOR. 1" = 20'
VERT. 1" = 5'

N

MATCH LINE STA. 12+78.22

LOT 1 BLOCK 1 THE DELL SUBDIVISION

MAIZE ROAD

Remove and Replace 350 S.Y. Asphalt Mat Pavement

Bell Telephone Manhole

UNPLATTED

Base Line STA. 14+19.8, 5.2 Ft. Right
STA. 14+22: Const. Std. Reinforced Concrete Manhole
Without STACK. W=10'-0", L=10'-0", H=8'-0", Top El. 133.7'
Install Precast Concrete Cover with Ring & Cover.

Install 4.0' of 18" Pipe Stubs North and South, El. 131.2'. Provide Temporary Plugs.

Base Line STA. 16+95.5, 33.2 Ft. Right
STA. 16+99: Const. Reinforced Concrete Manhole
With STACK: W=8'-0", L=6'-6", H=6'-6", Top El. 132.2'
Const. 2.6 Ft. Brick Stack to Top El. 135.8. See Note Below.

MATCH LINE STA. 19+16.5

CAUTION! Bell Telephone Cable; Approx. El. 130.0'
To be lowered to El. 125.0± By Others

4" Steel Gas Main

Install 9.3'± Storm Water Sewer Pipe

MAPLE AVENUE

Edge of Asphalt

Existing Water Main

CAUTION! 16" WATER MAIN
See This Sheet and Sheet 11

Install 245.55 ft. of 15.6'± Storm Sewer Pipe.

Install 12.3'± Storm Sewer Pipe

Remove and Relocate Guy Wire

Base Line STA. 14+50, 38.0 Ft. Right.
STA. 14+46.59 Back = STA. 14.53.45 Ahead: Const.
STD. Reinforced Concrete Manhole, W=8'-0", L=6'-0"
H=7'-6". Top El. 134.0'

NOTE: Manhole at BL STA. 16+95.5 shall be Constructed with 2 Ft. Brick Stack With Top at El. 135.8', approximately to existing ground surface Elevation. Construct manhole so it can be easily rebuilt as Modified Type I-A Curb Inlet in Future.

MATCH LINE STA. 12+78.22

LOT 5 BLOCK 1 MAPLE GARDENS

CAUTION! Bell Telephone Cable

Install 4.4.59 of 15.6'± Storm Sewer Pipe

Install 9.3'± Storm Water Sewer Pipe
See plan and Profile, Sheets 11 & 12, Line 1-a

LOT 1 BLOCK 20

OAK CLIFF ESTATES

LOT 2 BLOCK 20

MATCH LINE STA. 19+16.5

MATCH LINE STA. 12+80

EXISTING & MAPLE AVE.

STORM SEWER STA. 14+22
BL STA. 14+19.8 Const. Std. Reinforced Concrete Manhole with STACK. W=8'-0", L=10'-0", H=8'-0" Top El. 133.7'. Install Precast Concrete Cover, 9" Thick

Existing Bell Telephone Conduit in Plastic Duct. Construct Manhole around Duct. Provide Leadproof Joint between the existing encased concrete and the Manhole Walls at north & south.

STA. 14+88
Approx. Location of Bell Telephone Cable (El. 130.0') To be Lowered to El. 125.0', By Others.

STA. 14+46.59 Back = STA. 14+53.45 Ahead
BL STA. 14+50: Const. Std. Reinforced Concrete Manhole, W=8'-0", L=6'-0", H=7'-6". Top El. 134.0'

EXISTING GROUND

Proposed Top of Curb Maple Ave.

STORM SEWER STA. 16+95.5
Base Line STA. 16+99: Const. Std. Reinforced Concrete Manhole with STACK. W=8'-0", L=6'-6", H=6'-6" Install Precast Conc. Cover with Ring and Cover. See Note Above.

140
135
130
125
120

E 126.37
E 126.94
E 127.5'
E 127.64
E 128.37
E 128.9

CAUTION! Approximate STA. 14+41.46 16" Water Main. Top El. 125.64±

142 FT. of 48"×76" H.E.R.C.P. @ 0.4%
Alt. 142 FT. of 66"×51" C.M.P.A.-F.P. (3×1) @ 0.4%

290.14 FT. of 43"×68" H.E.R.C.P. @ 0.3 %
Alt. 290.14 FT. of 60"×46" C.M.P.A.-F.P. (3×1) @ 0.3 %

221 FT. of 38"×60" H.E.R.C.P. @ 0.4½
Alt. 221 FT. of 53"×41" C.M.P.A.-F.P. (3×1) @ 0.4½

126.87 126.45 126.05 126.94 127.74 128.04 128.37 129.31 129.71 129.75

12+80 13+00 14+00 15+00 16+00 17+00 18+00 19+00 19+20

SHEET NO. 4/17
STORM WATER SEWER No. 139
OAK CLIFF ESTATES, PHASE 1
PROJ. No.: 468 76 245 80989 000 000 001

D. KESSLER, KING SEPT 80
Y. D. DESAI OCT 80

FILMED FROM THE BEST AVAILABLE COPY.....

SCALE: HOR. 1" = 20'
VERT. 1" = 5'

N

TRACT NO. DEF 365-5

Base Line Sta. 21+75·5, 29·5 Ft. Right
STA. 21+79: Const. Std. Type I-A Curb Inlet, W = 8'-0"
Top El. 138·8', Install Precast Concrete Cover. Fill annulus to existing Ground Surface. El. 138·8', See NOTE Below

MATCH LINE STA. 18+16·5

MATCH LINE STA. 25+46·5

4" Steel Gas Main

South Line AC Surface

MAPLE AVENUE

Existing 16" AC Water Main

Install 123'± Storm Water Sewer Pipe

Install 371 Ft. of 42" Storm Water Sewer Pipe.

Remove and Replace 20 S.Y. Gravel Drive

534·75'

(250·02')

Install 4·0 Ft. of 24" Pipe Stub North. IE El. 133·5.

LOT 2, BLOCK 20 OAK CLIFF ESTATES

LOT 3, BLOCK 20 OAK CLIFF ESTATES

LOT 10, BLOCK 20 OAK CLIFF ESTATES

NOTE: The Inlet at Base Line STA. 21+75·5 is to be Constructed as Brick Manhole w Elevation approx. 138·0'. It shall be covered to El. 138·7' with precast Concrete Cover with 24" Dia. Manhole Ring and Cover. In future when Maple Avenue is constructed with Curb and Gutter, this inlet shall be modified to work as Type I-A Curb Inlet, W = 8'-0".

SWS STA. 21+75 Bs. STA. 21+79: Const. Type I-A Curb Inlet W = 8'-0", Top El. 138'8', See Note Above.

EXIST. E. MAPLE AVE.

Existing Ground Surface

Proposed Maple Ave. Top of Curb

IE 130·82'

IE 131·55'

IE 133·41

259 FT. of 38" x 60" H.E.R.C.P. @ 0·4%
Alt.: 259 FT of 53" x 41" C.M.P.A.-F.P. (3x1) @ 0·4%

371 FT. of 42" R.C.P. @ 0·5%
Alt.: 371 FT. of 42" C.M.P.-F.P. @ 0·5%

129·79 130·11 130·51 130·82 131·65 132·15 132·65 133·15 133·41

19+20 19+50 20+00 20+50 21+00 21+50 22+00 22+50 23+00 23+50 24+00 24+50 25+00 25+50 25+60

SHEET No. 5/17
STORM WATER SEWER NO 139
OAK CLIFF ESTATES, PHASE 1
PROJ. No. 468 76 245 80989 000 000 001

FILMED FROM THE BEST AVAILABLE COPY

BASE LINE: ℄ OF LARK AVENUE.
STA. 0+00 is 50 Feet North of Center Line of Maple Avenue.

BENCH MARK: El. 140.34 FT.; Rail Road Spike East Face of Power Pole. Appox 60 Feet North of Center Line of Maple Ave., and 1135 Feet West of Center Line of Maize Road.

SCALE: HOR. 1" = 20'
VERT. 1" = 5'

EXCEPTION

Install 30" Storm Sewer Pipe, See Sheet 7.

SHERIAC AVE. STA. 6+98: Const. Std. Type I-A Curb Inlet, W = 6'-0", Top El. 139.80 (Grd. 29+11.4, 36.67 Rt.)

SHERIAC AVE. STA. 6+98: Const. Std. Type I-A Curb Inlet, W = 4'-2", Top El. 139.80 (Grd. 29+11.4, 36.67 Rt.)

CAUTION! Proposed 8" Water By Others, Top 134.8

Proposed Water (8") Line, By others

Install 73.8' of 45° Storm Sewer Pipe

Install 33 ft. of 21"x15" C.M.P.A. Storm Sewer Pipe. USFL 136.89; DSFL. 136.66'

CAUTION! Existing 16"ϕ Water Main Top El. 134.45±

Install 530' of 36" SWS Pipe

Install 162.2 ft of 36" Storm Sewer Pipe

20' Utility Easement

20' SQUARE DRAINAGE EASEMENT

Install 18" Storm Water Sewer Pipe. See Sheet 9

LARK AVE. STA. 0+08; 27.0 Rt. Right
STA. 26+66 AHEAD = STA. 26+75 BACK
Const. Type B MANHOLE, DIA. = 6'-0". Top El. 140.7'

LARK AVE STA 1+70.2, 22.75 Right
STA 28+37.2 Const Std Type I A Curb Inlet, W=6'-0", Top El. 140.0'

Base Line STA. 26+09.5, 29.17 Rt.
STA. 26+13. Const. STD. Type I-A
Curb Inlet, W = 6'-0". Top El. 140.6

Existing 16"ϕ AC Water

Install 42" Storm Sewer Pipe

MATCH LINE STA. 25+50

MATCH LINE STA. 25+50

STA. 26+19 Rt. STA. 26+09.5: Const. Std. Type I-A Curb Inlet, W=6'-0". Top El. 140.6'

STA. 26+66 AHEAD = STA. 26+75 BACK LARK AVE. STA. 0+08; 27.0 Rt. Const. Type B MANHOLE, DIA. = 6'-0", Top El. 140.7'

STA. 28+37.2: LARK AVE. STA. 1+70.2: Const. Type I-A Curb Inlet; W = 6'-0", Top El. 140.0'

STA. 29+11.0 Sheriac Ave.: STA. 6+98: Const. Std. Type I-A Curb Inlet; W = 6'-0", Top El. 139.8'

Proposed Top of Curb

Proposed ℄ Lark Ave.

30" R.C.P. or C.M.P. @ 0.5% See Sheet 7

Proposed Water By Others, Top 134.8'

I.E. 133.41'
I.E. 133.73'
I.E. 133.23'
I.E. 134.55'
I.E. 134.60'
I.E. 135.57'
I.E. 136.2'
I.E. 136.51'
I.E. 136.57'
I.E. 137.0

63 FT. of 42" R.C.P @ 0.5%
Alt.: 63 FT. of 42" C.M.P-F.P. @ 0.5%

53 FT. of 36" RCP @ 0.6%
Alt.: 53 FT. of 36" C.M.P-F.P. @ 0.6%

162.2 FT. of 36" RCP @ 0.6%
Alt.: 162.2 FT. of 36" C.M.P-F.P @ 0.6%

73.8 FT. of 24"x38" H.E.R.C.P @ 0.5%
Alt.: 73.8 FT. of 35"x24" C.M.P.A-F.P @ 0.5%

133.41
133.66
134.55
134.75
135.35
135.57
136.51
136.57
137.0

25+50 26+00 26+50 27+00 27+50 28+00 28+50 29+00 29+50 30+00 30+50 31+00 31+50

SHEET NO 6/17
STORM WATER SEWER NO 199
OAK CLIFF ESTATES, PHASE 1
PROJ NO. 468-76-245-80989-000-000-001

FILMED FROM THE BEST AVAILABLE COPY.....

B.M. 140.34: R.R. Spk. East Face PP 60± North & MAPLE 1135'± West of ℄ Maize Road

Install 269·0 FT of 30" Storm Sewer Pipe @ 0·5%

EXCEPTION

CAUTION! Proposed 8" Water By Others Top El. 134·8

ST. STA. 6+98, Type I-A Curb Inlet. See Sheet 6 (STA 3+00)

SHERIAC AVE. STA 4+29·0: Const. Std. Type I-A Curb Inlet, W= 5'-0", Top El. 142·2', STA. 31+80

Install 268 FT. of 24" Storm Sewer Pipe @ 0·5%

CAUTION! Existing Sanitary Sewer, Approx. IE 126·0

CAUTION! Existing 8" Sanitary Sewer IE 129.47±

24" Storm Sewer Pipe. See Sheet 10

SHERIAC

21"×15" CMPA Sewer See Sheet 6

CAUTION! Proposed 8" Water By Others

Install 33 FT OF 18" R.C.P or C.M.P. Storm Sewer; USFL 141·0'; DSFL 140 65'

Proposed 8" Water

LARK

4·5% Type I See Sheet 6

MARS ST. STA. 0+09·0: Const. Std. Type I-A Curb Inlet, W= 4'-2", Top El. 142·0', STA. 0+56·6± See Sheet 10.

CAUTION! Proposed 8" Water, By Others. Top 138·6'

ST. STA. 6+98, Type I-A Inlet See Sheet 6

LOT 11 BLOCK 13

LOT 10 BLOCK 13

LOT 9 BLOCK 16

LOT 8 BLOCK 16

Parkdale St. STA. 0+08; Const. Std. Type I-A Curb Inlet, W= 4'-2", Top El. 144·5', Sewer Sta. 34+48

Install 24" Storm Sewer Pipe, See Sheet 10.

Parkdale St. STA. 0+08: Const. Std. Type I-A Curb Inlet, W= 4'-2", Top El. 144·5', Storm Sewer STA 34+48, 35·6 feet Left.

Install 18" Storm Sewer Pipe. See Sheet 8

MARS

PARKDALE

Install 4 FT OF 15" R.C.P. or C.M.P. Storm Sewer USFL 140·9', DSFL 140·7'

Parkdale Ave. STA. 0+16: Const. Std. Type I-A Curb Inlet, W=4'2", Top El. 144.54.

SCALE: HOR. 1"=20'
VERT. 1"=5'

N

D. L. KRUG 9/80
K. D. DESAI 10/80

DLH 364

STA. 2+94·0: Const. Std. Type I-A Curb Inlet, W= 5'-0", Top El. 139·8; Sta. STA. 6+98

STA. 31+80: Const. Std. Type I-A Curb Inlet W= 5'-0", Top El. 142·2' Sheridan Ave. STA. 4+29

STA 34+48: Const. Std. Type I-A Curb Inlet W=4'2", Top El 144.5' Parkdale Ave. STA 0+16

Proposed Top of Curb by Others

Existing Ground

Proposed Sheriac Street Pavement Surface.

IE 136.57

IE 136.59'

IE 137.91'

IE 138.4'

24" Storm Sewer IE in 138·3'

IE 139.74

IE 140.5'

IE 140.64'

18" Storm Sewer IE in 140.65'

Proposed 8" Water By Others. Top 138·0'

8" Sanitary Sewer IE 129·47'

10" A.B.S. Sanitary Sewer IE El. 126·1'

269 FT. of 30" R.C.P. @ 0·5%

Alt.: 269 FT. of 30" C.M.P.F.P. @ 0·5%

268 FT. of 24" R.C.P. @ 0·5%

Alt.: 268 FT. of 24" C.M.P.-F.P. @ 0·5%

136.87 137.01 137.51 137.91 138.50 139.00 139.50 139.94 140.86

29+00 30+00 31+00 32+00 33+00 34+00 35+00

SHEET No. 7/17
STORM WATER SEWER NO. 199.
OAK CLIFF ESTATES, PHASE I.
PROJ. No. 468-76-245-80989-000-000-001.

7/14

FILMED FROM THE BEST AVAILABLE COPY·····

SCALE: HOR.: 1" = 20'
VERT.: 1" = 5'

PARKDALE

Proposed 8" Water

Install 4 Ft. of 15" storm Sewer Pipe. USFL 140.9' DSFL 140.7'. See Sheet 7

St. STA. 0+16: Const. Type I-A Curb Inlet. See Sheet 7.

STA. 0+08: Const. Type I-A Curb Inlet. See Sheet 7.

Parkdale Ave. STA. 4+21: Const. Std. Type I-A Curb Inlet, W=4'-2', Top El. 146.42.

Install 34 Ft. of 15" R.C.P. or C.M.P. Storm Sewer. USFL 143.7', DSFL 143.5'

Install 33' of 18" Storm Sewer Pipe. See Sheet 7.

Parkdale St. STA. 0+08. Const. Type I-A Curb Inlet, W=4'-2'. See Sheet 7. Storm Sewer Sta. 33+48.

Install 232' of 18" Storm Sewer Pipe at 0.7%.

Parkdale Ave. STA. 2+40: Const. Std. Type I-A Curb Inlet, W=4'-2', Top El. 145.58. Storm Sewer Sta. 36+90

Install 170' of 18" Storm Sewer Pipe @ 0.6%

Parkdale Ave. STA. 4+10: Const. Std. Type I-A Curb Inlet, W=4'-2', Top El. 146.36. Storm Sewer Sta. 33+50.

CAUTION! Proposed Water Line, See Sheet 7

Install 24" Storm Sewer Pipe See Sheet 7

STA. 33+48: Const. Std. Type I-A Curb Inlet, W=4'-2', Top El. 144.5'. Parkdale St. STA. 0+08, See Sheet 7.

STA. 36+90: Const. Std. Type I-A Curb Inlet, W=4'-2', Top El. 145.58'. Parkdale St. Sta. 2+40

STA. 38+50: Const. Std. Type I-A Curb Inlet, W=4'-2', Top El. 146.36'. Parkdale St. Sta. 4+10

Existing Ground

Proposed Pavement by Others

E. 139.94

140.5'

142.12'

E. 142.28

E. 143.3

13" Storm Sewer @ 0.6%, E. 143.5'

232 FT. of 18" R.C.P. @ 0.7%
Alt. 232 FT. of 18" C.M.P. @ 0.7%

170 FT. of 18" R.C.P. @ 0.6%
Alt. 170 FT. of 18" C.M.P. @ 0.6%

SHEET No. 8/17
STORM WATER SEWER No. 139.
OAK CLIFF ESTATES, PHASE I.
PROJ. NO. 468-76-245-80989-000-000-001.

8/14

FILMED FROM THE BEST AVAILABLE COPY.....

EXCEPTION

SHERIAC

LARK

Sherlac STA. 6+98: Type I-A Curb Inlet, See Sheet 6.

30" Storm Sewer Pipe @ 0.6% See Sheet 6

Sherlac STA. 6+98: Type I-A Curb Inlet, See Sheet 6

10' Utility Easement

10' Utility Easement

21"x15" CMPA Sewer See Sheet 6

LARK AVE. Sta. 5+95: Const. Std. Type I-A Curb Inlet W = 4'-2", Top El. 141.33'.

Iron(P)

Proposed 8" Water

CAUTION! Proposed 8" Water By Others Top El. 134.8'

4.5ft Storm Sewer Pipe See Sheet 6

Install 45 FT of 15" R.C.P. or C.M.P. Storm Sewer USFL 138.3' DSFL 138.1'

36" Storm Sewer Pipe See Sheet 6

CAUTION! Sanitary Sewer. E 124.3±

Install Line 1: 18" Storm Sewer Pipe @ 0.5%

74.70'

Iron(P)

LARK AVE STA 5+74: Const. Type I-A Curb Inlet W = 4'-2", Top El 141.35'; Storm Sewer Std. A-4-03.8

20' Utility Easement

10" ABS Sanitary Sewer

Install Line 1: 18" Storm Sewer Pipe @ 0.5%

LARK AVE. STA. 1+70.2 Type I-A Curb Inlet Storm Sewer Sta. 0+00 = Sta. 28+37.2, See Sheet 6

LARK AVE. STA. 3+70.2: Const. Type I-A Curb Inlet, W = 4-2", Top El. 140.67; Storm Sewer Sta. 2+00

10' Utility Easement

LOT 10 BLOCK 20

LOT 9 BLOCK 20

LOT 8 BLOCK 20

LOT 7 BLOCK 20

LOT 6 BLOCK 20

LOT 5 BLOCK 20

LOT 4 BLOCK 20

LOT 11 BLOCK 13

LOT 12 BLOCK 13

LOT 13 BLOCK 13

LOT 14 BLOCK 13

LOT 15 BLOCK 13

LOT 16 BLOCK 13

SCALE: HOR. 1" = 20'
VERT. 1" = 5'

N

D. L. KRUG VOL 80 PG 80

D. L. KRUG VOL 80 PG 80

DLS 395

DLS 395

STA. 0+00 = STA 28+37.2 Main Line: Const. Type I-A Curb Inlet, W = 6'-0", Top El. 140.0', LARK AVE STA. 1+70.2.

STA. 2+00: Const. Std. Type I-A Curb Inlet W = 4'-2", Top El. 140.67', LARK AVE. STA. 3+70.2.

STA. 4+03.8: Const. Std. Type I-A Curb Inlet, W = 4'-2", Top El. 141.35', LARK AVE. STA. 5+74

Existing Ground

IE 135.67'

IE 135.9'

4.5ft Storm Sewer in. IE 134.2'

IE 136.9'

IE 136.96'

IE 138.0'

15" Storm Sewer Pipe Lead. IE 138.1'

Existing 10" A.B.S. Sanitary Sewer IE 126.9±

200 FT. of 18" R.C.P. @ 0.5%

Alt. 200 FT. of 18" C.M.P. @ 0.5%

203.8 FT. of 18" R.C.P @ 0.5%

Alt.: 203.8 FT. of 18" C.M.P. @ 0.5%

SHEET NO 9/17

STORM WATER SEWER NO. 199

OAK CLIFF ESTATES, PHASE I

PROJ. NO. 468 76 245 80989 000 00 001

FILMED FROM THE BEST AVAILABLE COPY .....

SCALE: HOR. 1"=20'
VERT. 1"=5'

MARS

Install 236 ft. of 24" Storm Sewer Pipe @ 0.3%

Install 234.75 ft. of 24" Storm Sewer Pipe @ 0.3%

Install 4.0 ft. of 15" R.C.P. or C.M.P. Storm Sewer. U.S.FL. 140.6', D.S.FL. 140.5'

Install 33 ft. of 17"x13" CMPA Storm Sewer. U.S.FL. 139.0'; D.S.FL. 138.8'

Install 56.25 ft. of 24" 14% Storm Sewer Pipe @ 6.4%

Install 4 Ft. of 15" RCP or C.M.P. Storm Sewer. U.S.FL. 140.5'; D.S.FL. 140.3'

MARS AVE. STA. 0+09: Const. Std. Type I-A Curb Inlet, W=5'-0", Top El. 142.0', STA. 0+26.

MARS AVE. STA. 0+09: Const. Std. Type I-A Curb Inlet. W= 4'-2". Top El. 142.0'.

MARS AVE. STA. 2+45: Const. Std. Type I-A Curb Inlet, W=5'-0", Top El. 142.78'. STA. 2+92.25.

MARS AVE. STA. 4+79.75: Const. Std. Type I-A Curb Inlet. W=5'-0", Top El. 143.55'. Sta. 5+27

MARS AVE. STA. 4+87.75: Const. Std. Type I-A Curb Inlet. W=4'-2", Top El. 143.57'. STA. 5+35.

MARS AVE. STA. 5+15.75: Const. Std. Type I-A Curb Inlet. W= 4'-2". Top El. 143.68'.

EXCEPTION

Sheriac Ave. STA. 4+29. Top TA Curb Inlet. W=5'-0". See Sheet 7

30" Storm Sewer Pipe. See Sheet 7

8.4 Storm Sewer Pipe See Sheet 7.

CAUTION! Existing 10" A.B.S. Sanitary Sewer. From Line El. 126.0±

CAUTION! Proposed 8" Water Line. By Others. Top El. 139.0'

CAUTION! Sanitary Sewer. See Sheet 7

Proposed 8" Water

Existing 15" A.B.S. Sanitary Sewer Approximate Flow Line El. 124.0'

Proposed Water Top El. 139.0'

Proposed Top of Curb. By Others

Existing Ground

STA. 0+00 = Main Storm Sewer Sta. 3+80: Const. Std. Type I-A Curb Inlet, W=5'-0", Top El. 142.2'. See Sht. 7.

STA. 0+56.25: Const. Std. Type I-A Curb Inlet. W= 5'-0", Top El. 142.00', Mars Ave. Sta. 0+09.

STA. 2+92.25: Const. Std. Type I-A Curb Inlet. W= 5'-0", Top El. 142.78 Mars Ave. Sta. 2+45.

STA. 5+27: Const. Std. Type I-A Curb Inlet. W= 5'-0". Top El. 143.55'. MARS AVE. STA. 4+79.75

E. 138.3'

E. 138.75'

E. 139.46'

E. 139.5'

E. 140.2'

30" Storm Sewer Main Out E. 138.0'

17"x13" Storm Sewer Lead E. in. 138.8'

15" Storm Sewer Lead Pipe E. 140.3'.

56.25 FT. of 24" R.C.P. @ 0.3%
Alt.: 56.25 FT. of 24" C.M.P.-F.P. @ 0.3%

236 FT. of 24" R.C.P. @ 0.3%
Alt.: 236 FT. of 24" C.M.P.-F.P. @ 0.3%

234.75 FT. of 24" R.C.P. @ 0.3%
Alt. 234.75 FT. of 24" C.M.P.-F.P. @ 0.3%

SHEET NO. 10/17
STORM WATER SEWER NO. 199.
OAK CLIFF ESTATES, PHASE I.
PROJ. NO. 468-76-245-80989-000-000-001.

12/14

FILMED FROM THE BEST AVAILABLE COPY.....

BASE LINE North: Center Line Of Maize Rd. STA. 0+00 is Section Corner at Center Lines Intersection of Maize Road at Maple Avenue.

STORM WATER SEWER STA. 0+00 is ℄ of Manhole at Base Line STA. 0+05.2, 22.5' Left.

SCALE: HOR: 1" = 20'
VERT: 1" = 5'

CAUTION! 16" A.C. Water Main in 30" Steel Casing. Approx. Top El. 126.0' Ensure Proper Compaction of Storm Sewer Bedding.

CAUTION! 16" AC Main, See Sheet 4

Install 16" AC main See Sheet 4

STA. 1+50, 38' L: Std Reinforced Concrete Manhole, Top El. 134.0', See Sheet 4.

Install 9.3' ± Storm Water Sewer Pipe

STA. 1+22: Std. Reinforced Concrete Manhole, Top El. 133.7', See Sheet 4

Remove and Replace 350 S.Y. Asphalt Mat Pavement, See Sheet 4.

Existing 16" Water Main

4" Steel Gas Main

2-6'S x 10' CMPA

Relocate Pole, if Necessary By Others

Base Line STA. 4+41, 34.5 Ft. Left
STA 4+36: Const. Std Type 1-A Curb Inlet, W=8'-0"
Top El. 132.4. Provide Temporary Plug at inlet Opening. See NOTE Below.

Install 4.0' of 18" Pipe Stub. E El. 129.5' Provide Temporary Plug.

Install 4 ft. of 15" Stub East E El. 129.8'

Relocate Pole, if Necessary, By Others

Install 7.0' ± Storm Water Sewer Pipe

Approximate Alignment of Relocated Ditch

MAIZE AVENUE

NOTE: Temporary Plug shall be Brick and Mortar Lining which can be easily removed in future. This Plug shall be approved by Field Engineer.

LOT 1 BLOCK 20 OAK CLIFF EST.

LOT 2 BLOCK 20 OAK CLIFF ESTATES

LOT 4 BLOCK 20 OAK CLIFF EST.

LOT 5, BLOCK 1 MAPLE GARDENS ADD.

LOT 2, BLOCK 1 MAPLE GARDENS 2ND ADD.

LOT 1, BLOCK 1 MAPLE GARDENS 2ND ADD.

LOT 6, BLOCK 1 MAPLE GARDENS ADD.

LOT 6, BLOCK 1 ROLLING HILLS COUNTRY CLUB ESTATES 4TH ADD.

Concrete Parking Lot

Existing Ground Surface

Existing ℄ MAIZE ROAD

Proposed Top of Curb Maize Road

Telephone Conduit

16" AC Main in 30" Steel Conduit: Top El. 126.0'

Existing 15" ABS Sanitary Sewer E 116.55'

STA. 4+36 ℄ STA. 4+41, (32.24 Provide Temporary Plug at Inlet Opening. See note Above.

Provide 10 C.Y. Fill over Pipe. Relocate Existing Ditch in Maize Road, where Necessary

MATCH LINE STA. 6+00

164 FT. of 29" x 45" H.E.R.C.P. @ 0.4%
Alt. 164 FT. of 40" x 31" C.M.P.A.-F.P. (3x1) @ 0.4%

436 FT. of 34" x 53" H.E.R.C.P. @ 0.3%
Alt.: 436 FT. of 46" x 36" C.M.P.A.-F.P. (3x1) @ 0.3%

SHEET NO. 11/17
STORM WATER SEWER NO. 199
OAK CLIFF ESTATES, PHASE I
PROJ. No. 468 76 245 80989 000 000 001

FILMED FROM THE BEST AVAILABLE COPY.....

LOT 2 BLOCK 20 OAK CLIFF ESTATES ADD.

20' Utility Easement

Install 6.0 feet of 24" Pipe Stub. Flow Elev 130.7'

Base Line STA. 7+46.28 Sec. Left
STA. 7+41: Const. Std. Type I-A Curb Inlet W=6'-0" Top El 133.46 Provide Temporary Plug at Inlet Opening. See Note on Sheet 11.

20' Drainage and Utility Easement

LOT 14, BLOCK D OAK CLIFF ESTATES 3RD ADDITION

Install 7.0 feet of Storm Water Sewer Pipe

64'

TEXAS

35' b/c

LOT 14, BLOCK A OAK CLIFF ESTATES 2ND ADDITION

20' Utility Easement

LOT 13, BLOCK A OAK CLIFF ESTATES 2ND ADDITION

Base Line STA. 10+55, 28.0 FT. Left.
STA. 10+50: Const. Std. Type I-A Curb Inlet. W=5'-0" Top El. 135.39.

20' Utility Easement

66' R/W

DOUGLAS

20' Drainage & Utility Easement

131.73'

Iron

Install 101 Ft. of 18" Storm Sewer Pipe

Future Inlet

N

SCALE: HOR.: 1"=20'
VERT.: 1"=5'

EXCEPTION

BL STA. 11+75; STA. 11+70
Future Std. Type I-A Curb Inlet W=4'-2"

Install 309' of 24" Storm Water Sewer Pipe

Approximate Alignment of Relocated Ditch

Bell Telephone Cable in Plastic Duct, Cont. Inc.

MAIZE

Relocated Ditch

Future 18" Storm Sewer

AVENUE

BL STA 11+24, 28.0 Left
STA. 11+37: Install Temporary Plug (2" Plank Bulkhead) 18" Storm Sewer to be extended North at Later.

Existing 16" Water Main

Existing Gas Main

RES. C

RES. D
ROLLING HILLS COUNTRY CLUB ESTATES FOURTH ADDITION

Parking

RES. A

LOT 6, BLOCK 1 MAPLE GARDENS ADDITION

10' Utility Easement

RES. E

Existing Water and Gas Mains

LOT 12, BLOCK 1 ROLLING HILLS COUNTRY CLUB ESTATES FOURTH ADDITION

LOT 11 BLOCK 1

LOT 9, BLOCK 1 ROLLING HILLS COUNTRY CLUB ESTATES FOURTH ADD.

LOT 8, BLOCK 1 ROLLING HILLS COUNTRY CLUB ESTATES FOURTH ADDITION

MATCH LINE STA. 6+00

STA. 7+41 BL. STA. 7+46 Const. Std. Type I-A Curb Inlet W=6'-0" Top El. 133.46 Provide Temporary Plug at Inlet Opening. See Note on Sheet 11

Provide 1.0 Ft. Cover over Pipe. Relocate Ditch approx. 3 Feet East when Necessary.

STA. 10+50 BL. STA. 10+55: Const. Std. Type I-A Curb Inlet W=5'-0" Top El. 135.39 Coordinate with Paving Contractor See Plan.

Proposed Driveway

STA 11+75 BL. STA. 11+55: Install Temporary Plug 2" Plank Bulkhead.

Existing Ground Surface

Existing & MAIZE ROAD

Proposed Top of Curb, Maize Road

IE 130.02

IE 130.2'

IE 131.59'

IE 132.10'

IE 132.58

Existing 15" A.B.S. Sanitary Sewer IE 116.95' ±

141 FT. of 29" x 45" HERCP @ 0.4%

Alt.: 141 FT. of 40"x31" CMPA-FP (3x1) @ 0.4%

309 FT. of 27" R.C.P. @ 0.45%

Alt.: 309 FT. of 27" C.M.P.-F.P. @ 0.45%

101 FT. of 18" R.C.P. @ 0.47%

Alt.: 101 FT. of 18" C.M.P. @ 0.47%

140.0
135.0
130.0
125.0
120.0
115.0

129.46 129.86 130.02 130.47 130.92 131.37 131.59

6+00 7+00 8+00 9+00 10+00 11+00 12+00

SHEET NO 12/17
STORM WATER SEWER NO 199
OAK CLIFF ESTATES ADDITION, PHASE I
PROJ. No. 468 76 245 80989 000 000 001

FILMED FROM THE BEST AVAILABLE COPY.....

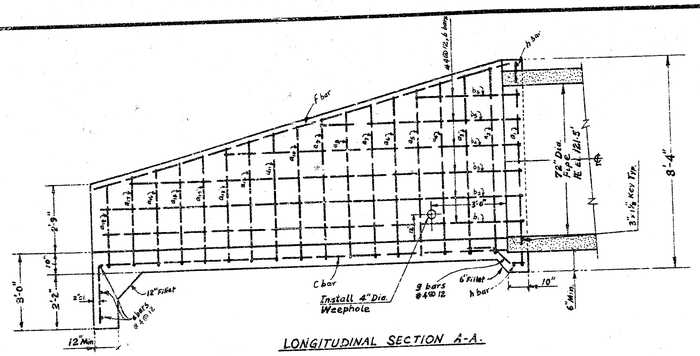

LONGITUDINAL SECTION A-A.

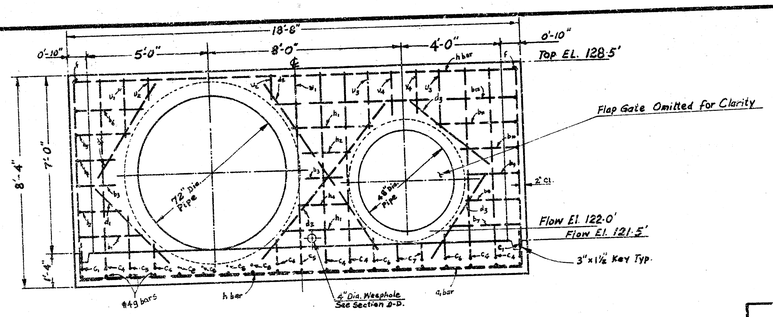

SECTION C-C

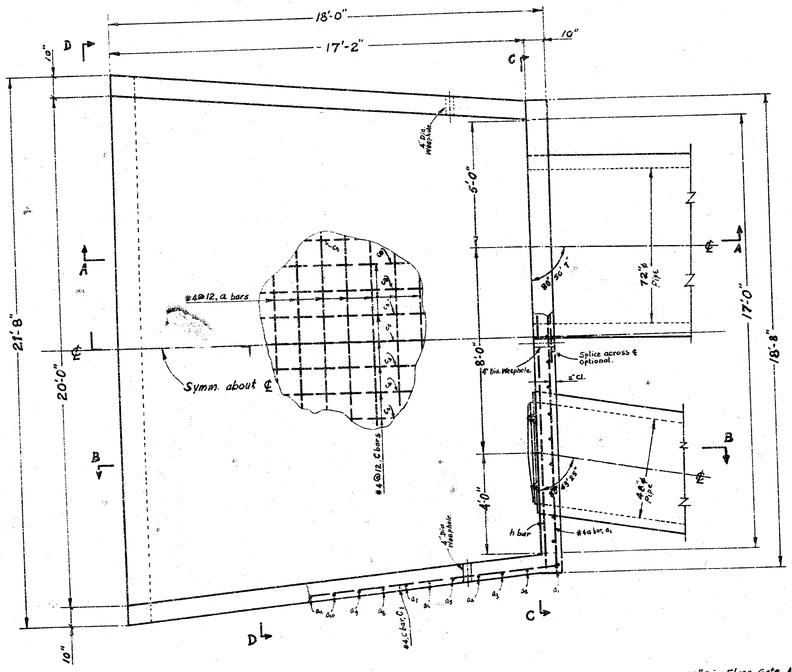

PLAN

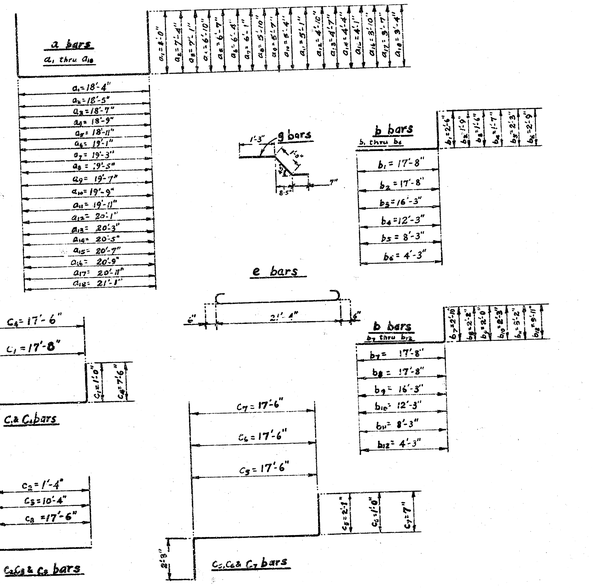

BAR BENDING DIAGRAMS NO SCALE

BAR SCHEDULE				
BAR	LENGTH	NO.	SHAPE	WEIGHT
a_1	34'-4"	1		22.94
a_2	33'-1"	1		22.10
a_3	32'-9"	1		21.88
a_4	32'-5"	1		21.66
a_5	32'-1"	1		21.44
a_6	31'-9"	1		21.21
a_7	31'-5"	1		20.99
a_8	31'-1"	1		20.76
a_9	30'-9"	1		20.55
a_{10}	30'-5"	1		20.32
a_{11}	30'-1"	1		20.10
a_{12}	29'-9"	1		19.88
a_{13}	29'-5"	1		19.65
a_{14}	23'-1"	1		19.43
a_{15}	28'-9"	1		19.21
a_{16}	28'-5"	1		18.99
a_{17}	28'-1"	1		18.76
a_{18}	27'-9"	1		18.54
b_1	20'-2"	1		13.47
b_2	19'-5"	1		12.97
b_3	17'-9"	1		11.86
b_4	13'-10"	1		9.24
b_5	10'-6"	1		7.02
b_6	7'-0"	1		4.69
b_7	20'-6"	1		13.70
b_8	19'-10"	1		13.25
b_9	18'-3"	1		12.19
b_{10}	14'-6"	1		9.69
b_{11}	11'-5"	1		7.63
b_{12}	14'-2"	1		9.47
C_1	20'-11"	2		27.95
C_2	3'-7"	2		4.79
C_3	12'-7"	2		16.81
C_4	27'-3"	5		91.03
C_5	21'-10"	2		29.18
C_6	20'-9"	4		55.46
C_7	20'-4"	2		27.17
C_8	19'-9"	4		52.78
d_1	4'-3"	4		11.36
d_2	8'-0"	4		21.38
d_3	4'-0"	4		10.69
e	22'-4"	3		44.76
f	11'-9"	2		23.72
g	2'-10"	19		35.97
h_1	3'-4"	2		4.45
h_2	2'-0"	1		1.34
h_3	1'-6"	1		1.00
h_4	2'-1"	1		1.39
h	18'-4"	2		24.50
v_1	2'-4"	2		3.12
v_2	0'-10"	2		1.11
v_3	2'-3"	2		3.01
v_4	1'-9"	2		2.34
TOTAL REBARS :				988.90 lb.
VOLUME OF CONCRETE :				21.87 c.y.

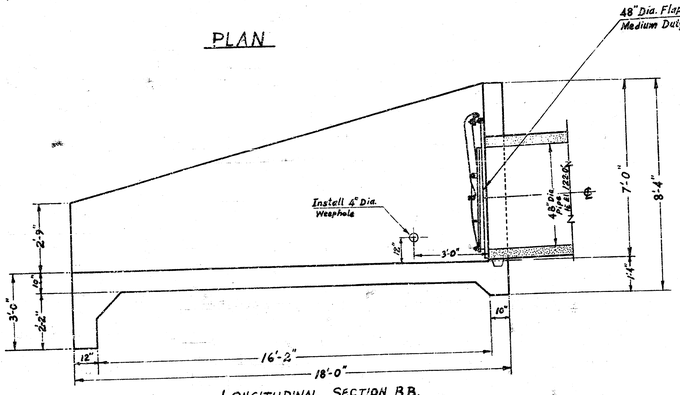

LONGITUDINAL SECTION B-B.

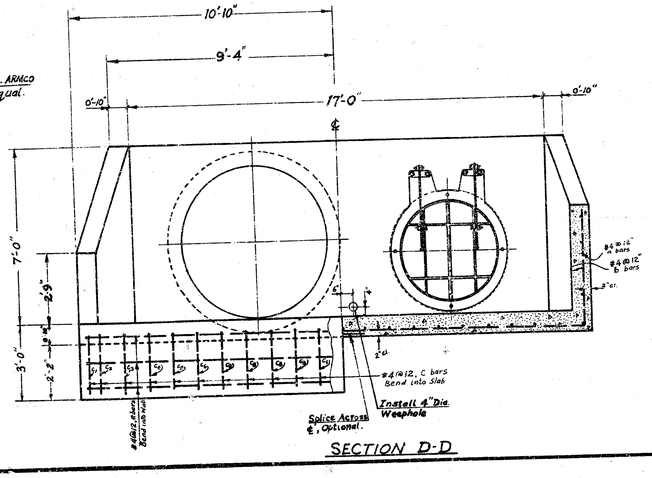

SECTION D-D

SHEET NO. 13/17
STORM WATER SEWER No. 199
OAK CLIFF ESTATES, PHASE I
PROJ. No. 468-76-245-80989-000-000-00

FILMED FROM THE BEST AVAILABLE COPY.....

TRAFFIC PLAN
INTERSECTION OF MAIZE ROAD AT MAPLE
DURING CONSTRUCTION OF MANHOLE AT STA. 14+22

GENERAL NOTES: TRAFFIC

1. All Flashers shall be erected at locations shown on this Plan. The distance between Flashers shall be 10 Feet, unless otherwise located on Plan, which shall be 5 feet.
2. Contractor shall ensure that a minimum of 12 feet of Travel Lane each way is maintained, after the various Warning Signs have been erected.
3. Contractor shall erect "Road Works Ahead" Signs approximately 300 feet away in each direction Before approaching the Intersection.
4. Cost of erecting Traffic Signs shall be included in the Item Bid 'Square Yards of Temporary Asphalt Installed.' Temporary Asphalt shall be 5" Asphalt Hook-up Material placed in accordance with City of Wichita Standard Specifications for Asphalt Pavement.
5. Contractor shall Remove all Temporary Traffic Signs and Flashers after Completing Construction of Manhole at STA. 14+22, (B.L. STA. 14+19.8).

GENERAL NOTES: TRAFFIC

1. ALL TRAFFIC CONTROL DEVICES SHALL BE PROVIDED, INSTALLED AND MAINTAINED BY THE CONTRACTOR IN ACCORDANCE WITH THE TRAFFIC BARRICADE MANUAL AND ALSO ACCORDING TO THIS PLAN DURING CONSTRUCTION OF THE MANHOLE AT BASE LINE STATION 14 +19.8, UNLESS DIRECTED OTHERWISE BY THE ENGINEER.
2. A MINIMUM TRAVEL LANE OF 12 FEET IN ALL DIRECTIONS SHALL BE MAINTAINED AT ALL TIMES DURING CONSTRUCTION OF THIS MANHOLE.
3. IN EACH DIRECTION APPROACHING THE INTERSECTION OF MAIZE ROAD AT MAPLE AVENUE, "ROAD WORK AHEAD" SIGNS, APPROXIMATELY 400 FEET IN ADVANCE OF THE LOCATION OF THE MANHOLE SHALL BE INSTALLED AND MAINTAINED.
4. COST OF TRAFFIC CONTROL DEVICES IS TO BE INCLUDED IN THE ITEM BID "SQUARE YARDS OF TEMPORARY ASPHALT INSTALLED." TEMPORARY ASPHALT SHALL BE 5" ASPHALT HOOK-UP MATERIAL PLACED IN ACCORDANCE WITH CITY OF WICHITA STANDARD SPECIFICATIONS FOR ASPHALT PAVEMENT. THIS TEMPORARY ASPHALT SHALL BE REMOVED AFTER THE CONSTRUCTION OF THE MANHOLE.
5. ALL TEMPORARY TRAFFIC CONTROL DEVICES SHALL BE REMOVED UPON COMPLETION OF THE MANHOLE AT STATION 14 +22 (B.L. STATION 14 +19.8).

DETAIL OF FLASHER (NO SCALE)

Flashing Light
Hazard Panel

SCALE: HOR. 1" = 20'
VERT 1" = 5'

MAIZE RD.
MAPLE AVENUE
UNPLATTED
OAK CLIFF ESTATES
LOT 1, BLOCK 20 OAK CLIFF ESTATES
LOT 2 BLOCK 20
LOT 5 BLOCK 1 MAPLE GARDENS
MATCH LINE STA 12+78.22
MATCH LINE STA 15+16.5

Base Line STA 14+19.8, 5.22 Ft. Right
STA 14+22 Const Sta. Reinforced Concrete Manhole
Without STACK, W=8'-0", L=8'-0", H=8'-0" Top El. 133.7'
Install Precast Concrete Cover with Ring & Cover.

Base Line STA 15+95.5, 33.2 Ft. Right
STA 15+99 Const. Reinforced Concrete Manhole
Without STACK, W=8'-0", L=8'-0", H=8'-0", Top El. 133.2
After Const. Fill over Manhole is Or final ground Surface
See NOTE Below.

Install 4.0' of 18" Temporary Stub South, @ 131.2'

CAUTION! Bell Telephone Cable, Approx. El. 130.0' To be lowered to El. 125.0± By Others

Install 30 S.Y. Asphalt Hook-up
Install 80 S.Y. Asphalt Hook-up
Install 35 S.Y. Asphalt Hook-up
Install 1703 S.Y. Asphalt Hook-up
Type III Barricade (Typical) with Flashers All Four Sides of Manhole
NO LEFT TURN Sign
Flasher Typical
Install STOP Sign
STOP Sign
KEEP RIGHT Sign
Remove and Replace Asphalt Wall Pavement
Remove and Replace Concrete Curb & Gutter
Remove and Replace Concrete Pavement
Remove and Replace Concrete Sidewalk
Remove and Relocate Guy Wire

CAUTION! 16" WATER MAIN See This Sheet and Sheet 11
CAUTION! Bell Underground Telephone Conduit. See Profile Below
Existing Water Main
Existing Bell Telephone Duct Bank
Existing 8" Storm Water Sewer
Existing 4" Gas Main
Edge of Asphalt
Edge of Pavement

Install 245.55 Ft. of 15"ø Storm Sewer Pipe
Install 44.59 of 15"ø Storm Sewer Pipe
Install 12 S.Y. Storm Sewer Pipe
Install 9.3 15" Storm Water Sewer Pipe See plan and Profile, Sheets 11 & 12

Base Line STA 14+50, 38.0 Ft. Right.
STA 14+66.59 Back = STA. 14+53.45 Ahead: Const.
STD. Reinforced Concrete Manhole, W=8'-0", L=6'-0" H=7'-6". Top El. 134.0'

NOTE: Manhole at BL STA 16+95.5' shall be Constructed without STACK with Top at El. 133.2, approximately 2.6' below existing ground Surface. Construct manhole so it can be converted into a Modified Type I A Curb Inlet in Future.

STORM SEWER STA. 16+95.5 to Reinforced Concrete Manhole, Without STACK, W=8'-0", L=8'-0", H=8'-0", Top El. 133.2 Precast Conc. Cover with Ring and Cover. Fill to Original Ground Surface. See Note Above

Existing Ground Surface
Proposed Top of Curb Maple Ave.

142 FT of 48"x76" H.E.R.C.P @ 0.4%
Alt. 142 FT of 66"x51" C.M.P.A.-F.P. (3x1) @ 0.4%

290.14 FT of 43"x68" H.E.R.C.P @ 0.3%
Alt. 290.14 FT of 60"x46" C.M.P.A.-F.P. (3x1) @ 0.3%

221 FT of 38"x60" H.E.R.C.P @ 0.4%
Alt. 221 FT of 53"x41" C.M.P.A.-F.P. (3x1) @ 0.4%

SHEET NO. 14/17
STORM WATER SEWER No. 139
OAK CLIFF ESTATES, PHASE 1
PROJ NO. 469 76 245 80989 000 000 001

PLAN
SURVEYED: 1-27-80
DRAWN: 2-1-80
CHECKED: 2-7-80
SCALE: 1" = 20'

PROFILE
SURVEYED: 1-27-80
DRAWN: 2-1-80
CHECKED: 2-7-80
SCALE: HOR. 1" = 20'
VERT. 1" = 5'

FILMED FROM THE BEST