STATE	PROJECT NO.	YEAR	SHEET NO.	TOTAL SHEETS
KANSAS	87 N-0362-01	2007	11	48

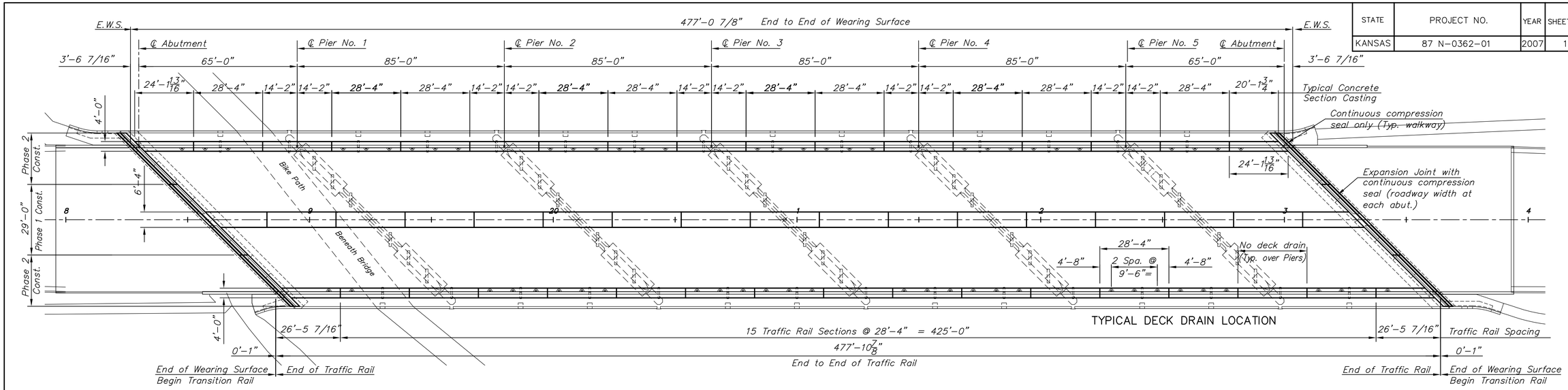

TYPICAL DECK DRAIN LOCATION

BRIDGE DECK PLAN

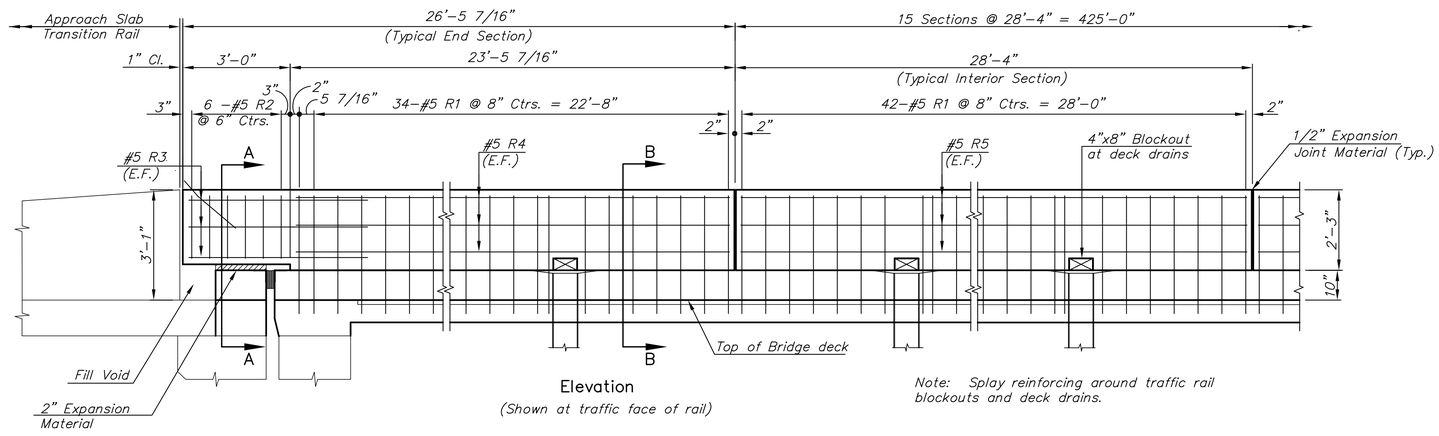

Elevation

(Shown at traffic face of rail)

Note: Splay reinforcing around traffic rail blockouts and deck drains.

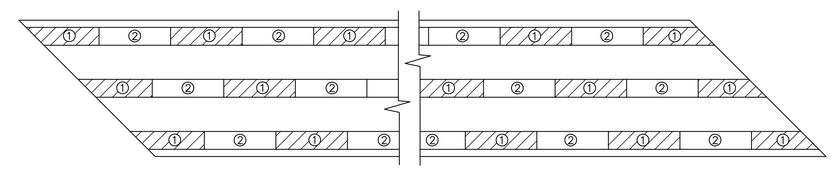

CONCRETE PLACING SEQUENCE DIAGRAM

1. Cast bridge deck replacement in 28'-4" sections, alternating. Allow 7 days between casting alternate sections.
2. Adjoining surfaces shall be brush blast, power washed, and water soaked 2 hours, prior to casting.

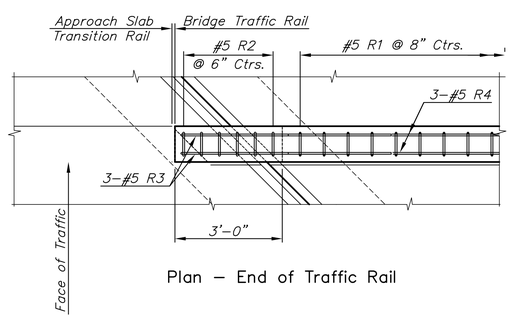

Plan – End of Traffic Rail

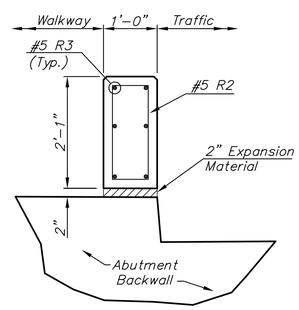

Section A–A

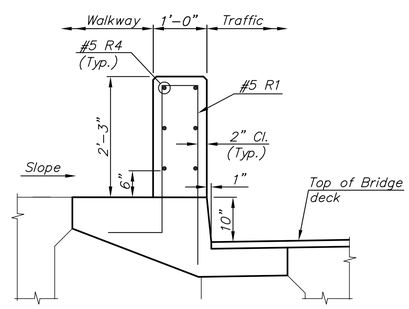

Section B–B

TRAFFIC RAIL DETAIL

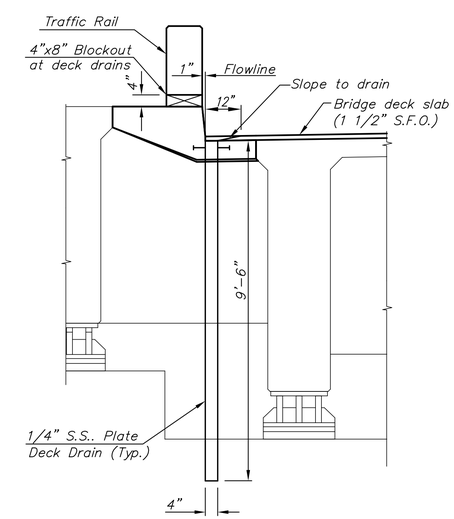

Elevation

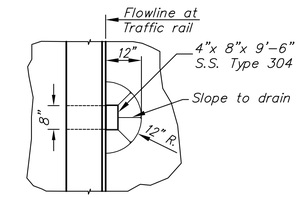

Plan

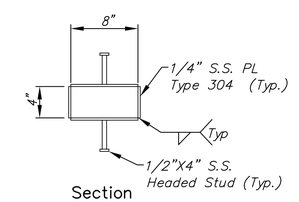

Section

DECK DRAIN DETAIL

A total of 61 deck drains are required. Install deck drains as shown in layout. Install 3 deck drains per 28'-4" concrete section, except at pier locations and bridge ends.

J:\Civil\04223\dwg\BRIDGE\04223SP1.dwg 09/17/2007 10:50:44 AM CST

KANSAS DEPARTMENT OF TRANSPORTATION

SUPERSTRUCTURE IMPROVEMENTS
DECK PLAN

PROJ. NO. 87 N-0362-01 SEDGWICK CO.

MKEC ENGINEERING CONSULTANTS, INC.
WICHITA, KANSAS

DESIGNED BY:	JAG	CHECKED BY:	KJS
DRAWN BY:	DPG	DATE: 4/23/07	SHEET 11 OF 48