PLOTTED: Thursday, October 22, 2026 @ 02:38PM

# GENERAL NOTES

1. THE CONTRACTOR SHALL COMPLY WITH ALL APPLICABLE SAFETY REGULATIONS. ALL CONSTRUCTION SHALL BE COMPLETED FOLLOWING CURRENT CITY STANDARD SPECIFICATIONS AND SPECIAL PROVISIONS.

2. CONTRACTOR WILL BE REQUIRED TO PROVIDE NOTICE TO UTILITY COMPANIES A MINIMUM OF SEVENTY-TWO (72) HOURS PRIOR TO ANY EXCAVATION, AS FOLLOWS:

   KANSAS ONE-CALL 687-2470

   THE CONTRACTOR MUST NOTIFY THE FOLLOWING IN CASE OF AN EMERGENCY:

   | | |
   |---|---|
   | AT&T | 800-246-8464 |
   | BLACK HILLS ENERGY (GAS) | 800-694-8989 |
   | CITY OF WICHITA WATER & SEWER | 316-219-8921 |
   | CITY OF WICHITA STORMWATER | 316-268-4090 |
   | CITY OF WICHITA TRAFFIC | 316-268-4034 |
   | COX COMMUNICATIONS (CABLE) | 888-249-3530 |
   | EVERGY | 800-544-4857 |
   | KANSAS GAS SERVICE (GAS) | 888-482-4950 |

3. UTILITY SERVICE LINES, POLES, ETC. ARE TO BE ADJUSTED AS NECESSARY BY OTHERS PRIOR TO CONSTRUCTION UNLESS THE PLANS SPECIFICALLY CALL FOR THEIR ADJUSTMENT BY THE CONTRACTOR OR UNLESS THE PLANS SPECIFICALLY IDENTIFY A UTILITY TO BE ADJUSTED BY ITS OWNER DURING CONSTRUCTION. EXISTING UTILITIES AND THEIR LOCATION, AS SHOWN ON THE PLANS, REPRESENT THE BEST INFORMATION OBTAINABLE FOR DESIGN. THE CONTRACTOR WILL BE REQUIRED TO WORK AROUND EXISTING UTILITIES WITHIN THE RIGHT-OF-WAY WHICH DO NOT CONFLICT WITH PROPOSED CONSTRUCTION.

4. RUBBLE FROM THE REMOVAL OF MISCELLANEOUS STRUCTURES AND EXCESS EXCAVATION WHICH IS TO BE WASTED SHALL BE DISPOSED OF ON SITES TO BE PROVIDED BY THE CONTRACTOR. THESE SITES SHALL BE APPROVED BY THE ENGINEER AS TO SUITABILITY, APPEARANCE AND SITE LOCATION. LOCATIONS, IN THE OPINION OF THE ENGINEER, THAT WILL LEAVE AN UNSIGHTLY APPEARANCE WILL NOT BE APPROVED. ALL DISPOSAL SITES MUST BE APPROVED BY THE KANSAS DEPARTMENT OF HEALTH AND ENVIRONMENT. MATERIAL EITHER STOCKPILED OR DISPOSED OF IN A FLOOD PLAIN WILL REQUIRE A KANSAS STATE BOARD OF AGRICULTURE PERMIT. ANY MATERIAL DUMPED IN WATERS OF THE UNITED STATES OR WETLANDS IS SUBJECT TO U.S. CORPS OF ENGINEERS PERMITTING REGULATIONS. ANY MATERIAL BURIED OR STOCKPILED BEYOND APPROVED CONSTRUCTION LIMITS WOULD REQUIRE ADDITIONAL ARCHAEOLOGICAL INVESTIGATIONS UNLESS BURIED IN A PREVIOUSLY APPROVED BORROW LOCATION.

5. TREES AND SHRUBS IN PUBLIC RIGHT-OF-WAY WHICH ARE IN DIRECT CONFLICT WITH PROPOSED NEW CONSTRUCTION SHALL BE REMOVED BY THE CONTRACTOR WITH THE CITY ENGINEER'S APPROVAL. TREES AND SHRUBS WHICH ARE NOT IN DIRECT CONFLICT WITH PROPOSED NEW CONSTRUCTION SHALL BE SAVED AND PROTECTED FROM DAMAGE.

6. THE CONTRACTOR SHALL GIVE ALL PROPERTY OWNERS AND/OR TENANTS OF DEVELOPED PROPERTY ABUTTING THE CONSTRUCTION OF THIS PROJECT A MINIMUM OF TEN (10) DAYS NOTICE PRIOR TO START OF CONSTRUCTION.

7. THE CONTRACTOR SHALL BE RESPONSIBLE FOR PRESERVING PROPERTY IRONS. THE CONTRACTOR WILL BE REQUIRED TO RE-ESTABLISH ANY PROPERTY IRONS WHICH ARE DAMAGED OR DESTROYED BY HIS CONSTRUCTION OPERATIONS. SUCH IRONS SHALL BE RE-ESTABLISHED BY A LICENSED LAND SURVEYOR IN ACCORDANCE WITH STATE LAWS.

8. THE ENGINEERING DIVISION SHALL FIELD LOCATE WATER VALVES ONE TIME DURING CONSTRUCTION WHEN REQUESTED BY THE CONTRACTOR. IT SHALL BE THE CONTRACTOR'S RESPONSIBILITY TO PRESERVE SUCH FIELD LOCATIONS DURING THE CONSTRUCTION PROCESS. WATER VALVES, VALVE BOXES OR FIRE HYDRANTS DAMAGED DURING CONSTRUCTION SHALL BE REPAIRED BY CONTRACTOR AT HIS OWN EXPENSE. VALVE BOXES AND WATER METERS WITHIN THE PROJECT LIMITS SHALL BE ADJUSTED TO MATCH FIELD GRADES BY THE CONTRACTOR.

9. IF TRAFFIC WILL BE IMPACTED BY CONSTRUCTION, A TRAFFIC CONTROL PLAN MUST BE SUBMITTED AND APPROVED BY THE CITY TRAFFIC ENGINEER AT traffic@wichita.gov BEFORE CONSTRUCTION CAN BEGIN. THE CONTRACTOR SHALL BE RESPONSIBLE FOR ALL TRAFFIC CONTROL MEASURES TO FACILITATE CONSTRUCTION. ALL CONSTRUCTION ZONE MARKINGS AND SIGNAGE SHALL CONFORM TO THE LATEST VERSION OF THE MANUAL ON UNIFORM TRAFFIC CONTROL DEVICES (MUTCD) AS PUBLISHED BY THE US DEPT. OF TRANSPORTATION, FEDERAL HIGHWAY ADMINISTRATION. ALL COSTS ASSOCIATED WITH CONSTRUCTION MARKINGS AND SIGNAGE SHALL BE THE CONTRACTOR'S RESPONSIBILITY.

10. ALL AREAS DISTURBED DURING CONSTRUCTION THAT WILL NOT BE UNDER PROPOSED PAVEMENT SHALL BE RESTORED TO MATCH EXISTING CONDITIONS.

11. CONTRACTOR SHALL LIMIT THE EXTENT OF TRENCH OPEN OVERNIGHT AND WEEKENDS TO LESS THAN 50 FEET.

12. EXISTING UTILITIES AND THEIR LOCATION, AS SHOWN ON THE PLANS REPRESENT THE BEST INFORMATION OBTAINABLE FOR DESIGN. LOCATION INFORMATION HAS BEEN OBTAINED FROM THE VARIOUS COMPANIES AND IS EITHER FROM COMPANY UTILITY DRAWINGS OR COMPANY PROVIDED FIELD LOCATIONS. THE PLAN LOCATIONS SHOWN ARE NOT GUARANTEED. ADDITIONAL EXISTING UTILITIES MAY ALSO BE ENCOUNTERED.

13. A PORTION OF EXCESS EXCAVATED MATERIAL SHALL BE MOUNDED AROUND MANHOLES WHICH EXTEND MORE THAN ONE (1) FOOT ABOVE THE EXISTING GROUND. SUCH MOUND SHALL BE CONSTRUCTED WITH NEW DEVELOPMENT A SIX (6) FOOT DIAMETER FLAT TOP WITH 4 TO 1 SIDE SLOPES DOWN TO THE ORIGINAL GROUND. THE ELEVATION OF THE FLAT TOP OF THE MOUND SHALL BE 0.4 FOOT BELOW THE TOP OF THE MANHOLE.

14. CONTRACTOR SHALL PROVIDE POSITIVE DRAINAGE AWAY FROM ALL MANHOLE COVERS.

15. ALL TRAFFIC CONTROL DEVICES IN THE WORK ZONE (INCLUDING MARKINGS AND SIGNS) AND THEIR INSTALLATION AND MAINTENANCE SHALL COMPLY WITH THE LATEST EDITION OF THE MANUAL ON UNIFORM TRAFFIC CONTROL DEVICES (MUTCD). ALL TRAFFIC CONTROL DEVICES IN THE TRAVELED WAY OR CLEAR ZONE SHALL BE CRASHWORTHY (NCHRP REPORT 350 OR MASH COMPLIANT). https://safety.fhwa.dot.gov/roadway_dept/countermeasures/reduce_crash_severity/

16. ALL CONSTRUCTION EQUIPMENT, INCLUDING VEHICLES, MATERIALS, AND DEBRIS, SHALL BE STORED OUTSIDE OF THE CLEAR ZONE, WHERE THIS CANNOT BE ACHIEVED THE CONTRACTOR SHALL PLACE APPROPRIATE SIGNS, ABJECT IDENTIFIERS, AND/OR BARRICADES IN COMPLIANCE WITH MUTCD.

17. EXCEPT WHEN REQUIRED FOR SAFETY, TRAFFIC CONTROL SHALL NOT BLOCK ANY LANES OR SIDEWALKS WHEN WORK IS NOT BEING PERFORMED.

18. FOLLOW THE LINK BELOW FOR CONSTRUCTION DETAILS ON SPECIFIC CITY OF WICHITA STANDARD DETAILS: https://www.wichita.gov/613/Project-Development-Construction-Resourc

19. DEVELOPER FOR THIS PROJECT IS:
    MURDOCK PROPERTIES, LLC
    5841 N. PROSPECT RD.
    PARK CITY, KS 67204
    LOUIS ROBELLI
    (316)-461-6334

STORM WATER SEWER #840 PHASE 1 TO SERVE

# RIVINGTON ADDITION

THE CITY OF WICHITA, KANSAS
PAUL GUNZELMAN, P.E. - CITY ENGINEER

PROJECT NO. 458-2026-085656

ORG CODE 47318626

MUNIS NO. E6208

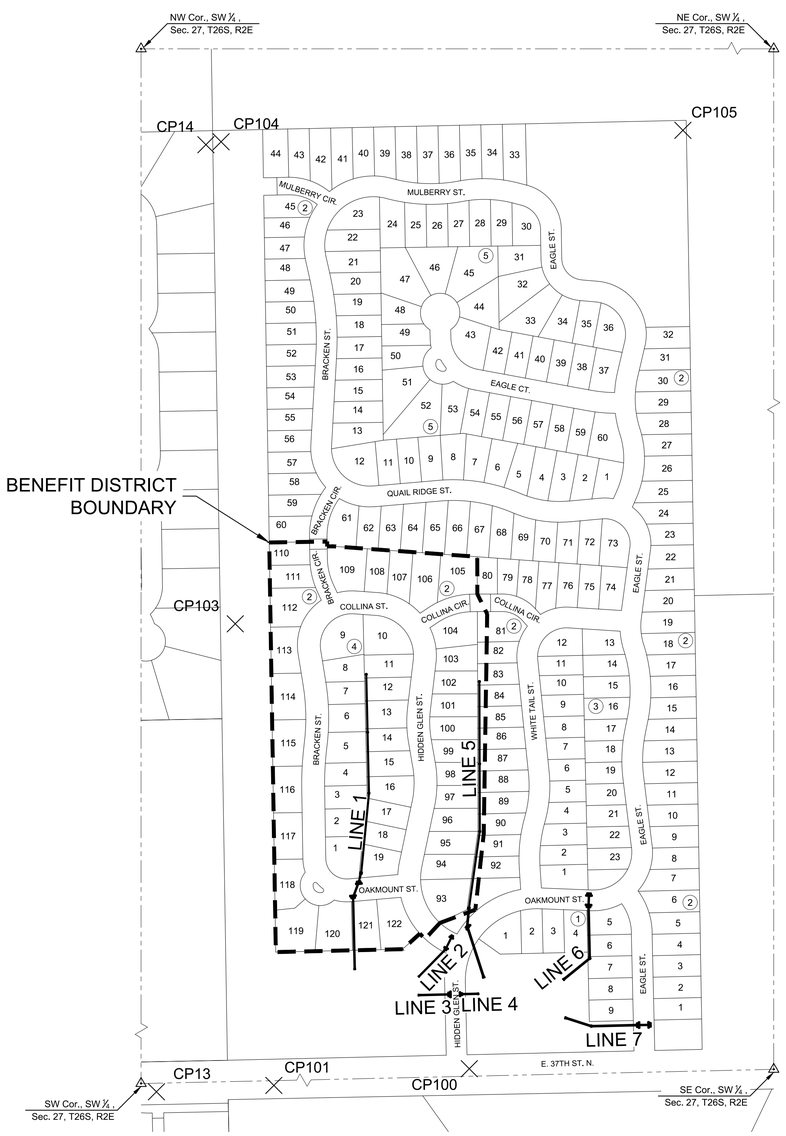


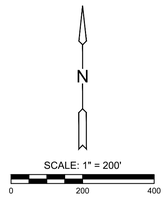


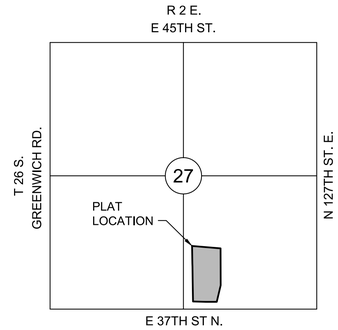


## VICINITY MAP

*SCALE: NTS*

## INDEX TO DRAWINGS


| SHEET NO. | DESCRIPTION |
|---|---|
| 01 | TITLE SHEET |
| 02-04 | LINE 1 |
| 04 | LINE 2 |
| 05 | LINE 3 & 4 |
| 06-07 | LINE 5 |
| 08 | LINE 6 |
| 09 | LINE 7 |
| 10-13 | SWS DETAILS |
| 14-15 | COORDINATE PLAN |
| 16 | EROSION CONTROL PLAN |
| 17-21 | BMP SHEETS |
| 22-24 | FINAL PLAT |


# BENCHMARKS/CONTROL POINTS

Datum:
The Horizontal Datum is based on the Kansas Coordinate System of 1983, NAD83(2011), EPOCH:2010.0000, South Zone. Coordinates shown have been modified to the ground using a combined adjustment factor of 1.0001200144. State Plane coordinates can be calculated by multiplying the shown values by 0.99988.

All elevations shown are based on the NAVD 88 vertical datum, Geoid 12b.

Control Points:
CP-100
N: 1710517.797 E: 1689369.023 EL: 1371.878
Description of control point: 5/8 rebar with Aluminum MKEC control cap

CP/BM-101
N: 1710471.269 E: 1688822.586 EL: 1372.269
Description of control point: + cut in conc field entrance

CP-103
N: 1711761.631 E: 1688714.725 EL: 1387.086
Description of control point: 5/8 rebar with Red MKEC control cap

CP-104
N: 1713109.115 E: 1688675.112 EL: 1392.619
Description of control point: 5/8 rebar with Red MKEC control cap

CP-105
N: 1713141.250 E: 1689966.006 EL: 1385.169
Description of control point: 5/8 rebar with Red MKEC control cap

CP/BM-12
N: 1710384.173 E: 1686866.599 EL: 1382.187
Description of control point- Square "X" Cut on the North End of Curb Return of Island.

CP/BM-13
N: 1710453.336 E: 1688494.504 EL: 1375.087
Description of control point- "+" Cut on the midpoint of a curb return

CP-14
N: 1713100.953 E: 1688632.846 EL: 1393.105
Description of control point- 5/8" Rebar with MKEC Aluminum Cap.

Note:
All Control Points shown have elevations established using standard surveying procedures and can be used as temporary benchmarks. When using a Control point as a temporary benchmark, it is recommended that cross-checks be made to other control points or benchmarks to confirm elevations prior to use.

MKEC
Wichita, KS • 316.684.9600

SCOUT PRESTON EVANS LICENSED 24423 KANSAS PROFESSIONAL ENGINEER
10/22/26

STORM WATER SEWER #840 PHASE 1

# RIVINGTON ADDITION

WICHITA, KANSAS

TITLE SHEET

| PROJECT NO. | |
|---|---|
| | 458-2026-085656 |
| SCALE | |
| | 1"=200' |

| DRAWN | DESIGNED | CHECKED |
|---|---|---|
| BWS | DFL | SPE |

| NO. | REVISION | DATE |
|---|---|---|
| 0 | ISSUED FOR CONSTRUCTION | 10/23/2026 |

SHEET NO.
C-001-D01
01 OF 24

©2026 MKEC ENGINEERING, INC. ALL RIGHTS RESERVED WWW.MKEC.COM THESE DRAWINGS AND THEIR CONTENTS, INCLUDING, BUT NOT LIMITED TO, ALL CONCEPTS, DESIGNS, & IDEAS ARE THE EXCLUSIVE PROPERTY OF MKEC ENGINEERING, INC. (MKEC), AND MAY NOT BE USED OR REPRODUCED IN ANY WAY WITHOUT THE EXPRESS CONSENT OF MKEC.

J:\PROJECTS\2025\2501010637 - ARTBSTE_RIVINGTON\00 250637 CAD\SHTS\00 CIVIL\SWS\PH1\250637_C-001-D01.DWG

PLOTTED: Wednesday, October 21, 2026 @ 04:34:54PM
J:\PROJECTS\2025\2501010637 - ARTISTIC_RIVINGTON\00 250637 CAD\SHTS\05 CIVIL\SWS\PH1\250637_C-201-D01.DWG

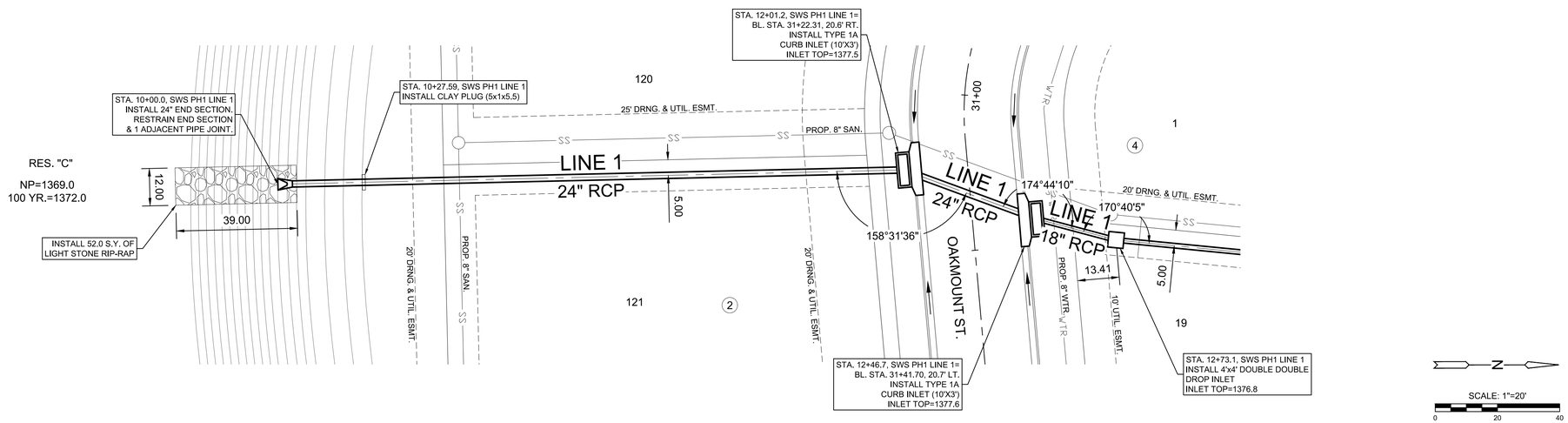


NOTE:
CONTRACTOR TO VERIFY THE DEPTH AND LOCATION OF EXISTING UTILITIES PRIOR TO CONSTRUCTION.

## SWS PH1 LINE 1 - 1 OF 3

SCALE: HORIZ 1"=20', VERT 1"=5'

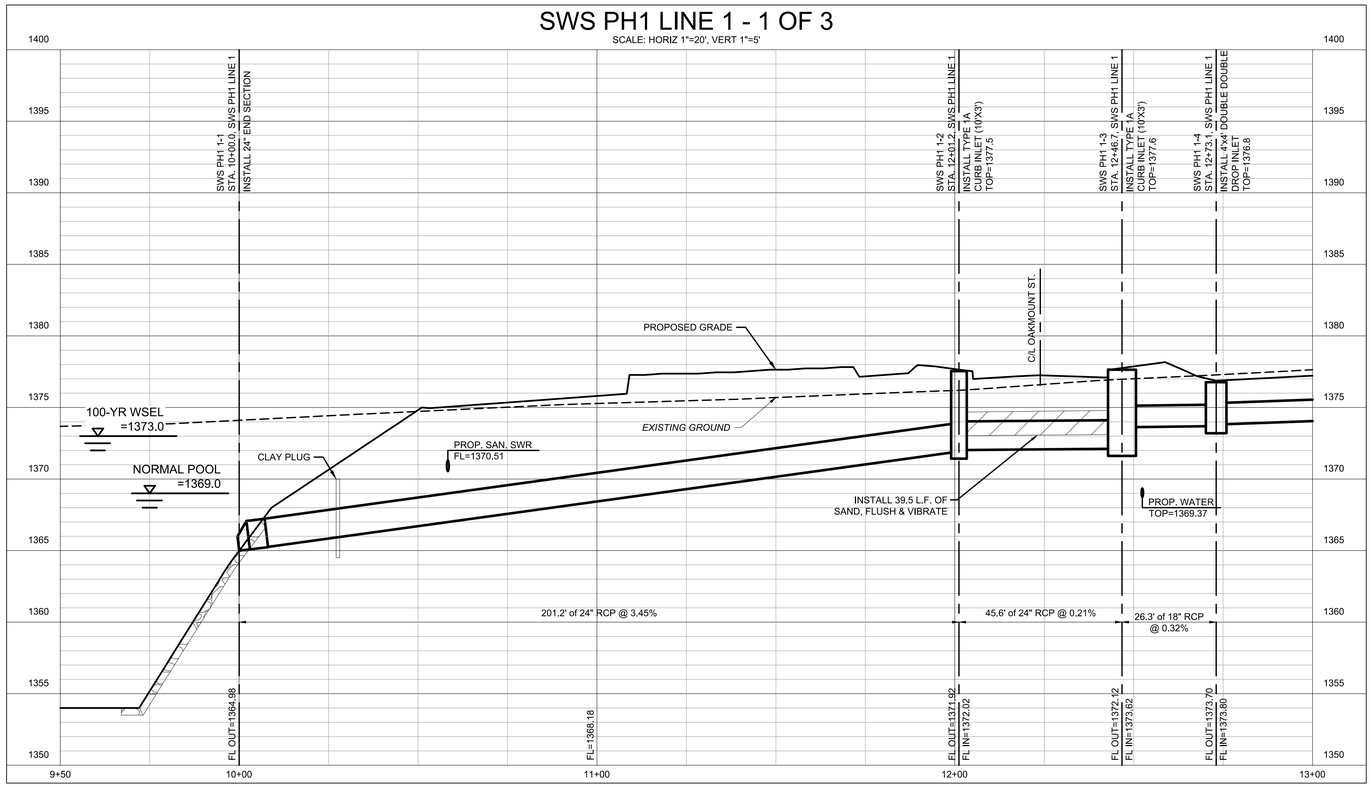


MKEC
Wichita, KS • 316.684.9600

SCOTT PRESTON LEHMAN
LICENSED
24423
KANSAS
PROFESSIONAL ENGINEER
10/22/26

STORM WATER SEWER #840 PHASE 1

# RIVINGTON ADDITION

WICHITA, KANSAS

© 2026 MKEC ENGINEERING, INC. ALL RIGHTS RESERVED WWW.MKEC.COM THESE DRAWINGS AND THEIR CONTENTS, INCLUDING, BUT NOT LIMITED TO, ALL CONCEPTS, DESIGNS, & IDEAS ARE THE EXCLUSIVE PROPERTY OF MKEC ENGINEERING, INC. (MKEC), AND MAY NOT BE USED OR REPRODUCED IN ANY WAY WITHOUT THE EXPRESS CONSENT OF MKEC.

LINE 1

PROJECT NO. 458-2026-085656

SCALE: VERT: 1"=5' HORIZ: 1"=20'

| DRAWN | DESIGNED | CHECKED |
|---|---|---|
| BWS | DFL | SPE |

| NO. | REVISION | DATE |
|---|---|---|
| 0 | ISSUED FOR CONSTRUCTION | 10/23/2026 |

SHEET NO.
C-201-D01
02 OF 24

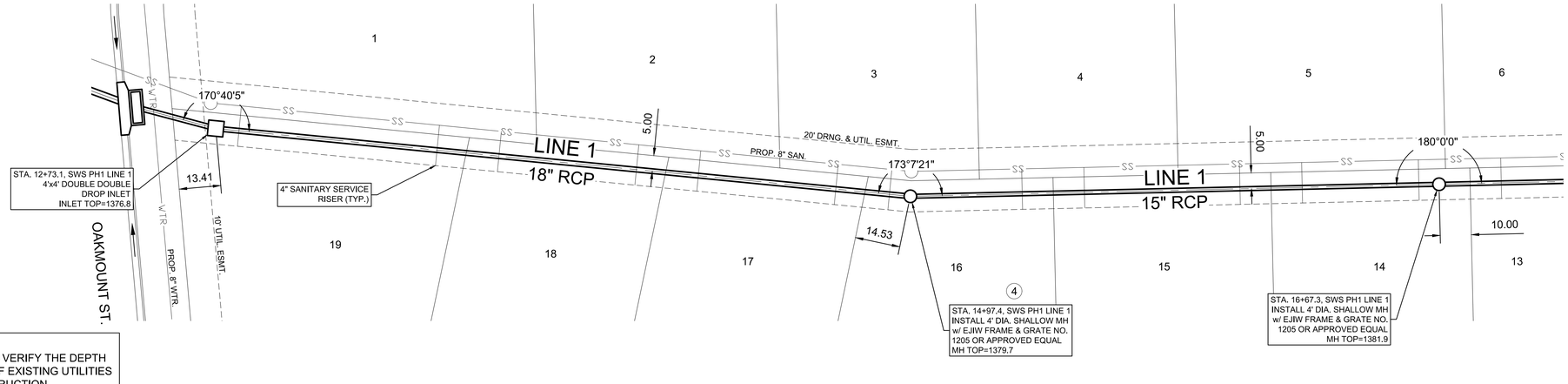


NOTE:
CONTRACTOR TO VERIFY THE DEPTH AND LOCATION OF EXISTING UTILITIES PRIOR TO CONSTRUCTION.

## SWS PH1 LINE 1 - 2 OF 3

SCALE: HORIZ 1"=20', VERT 1"=5'

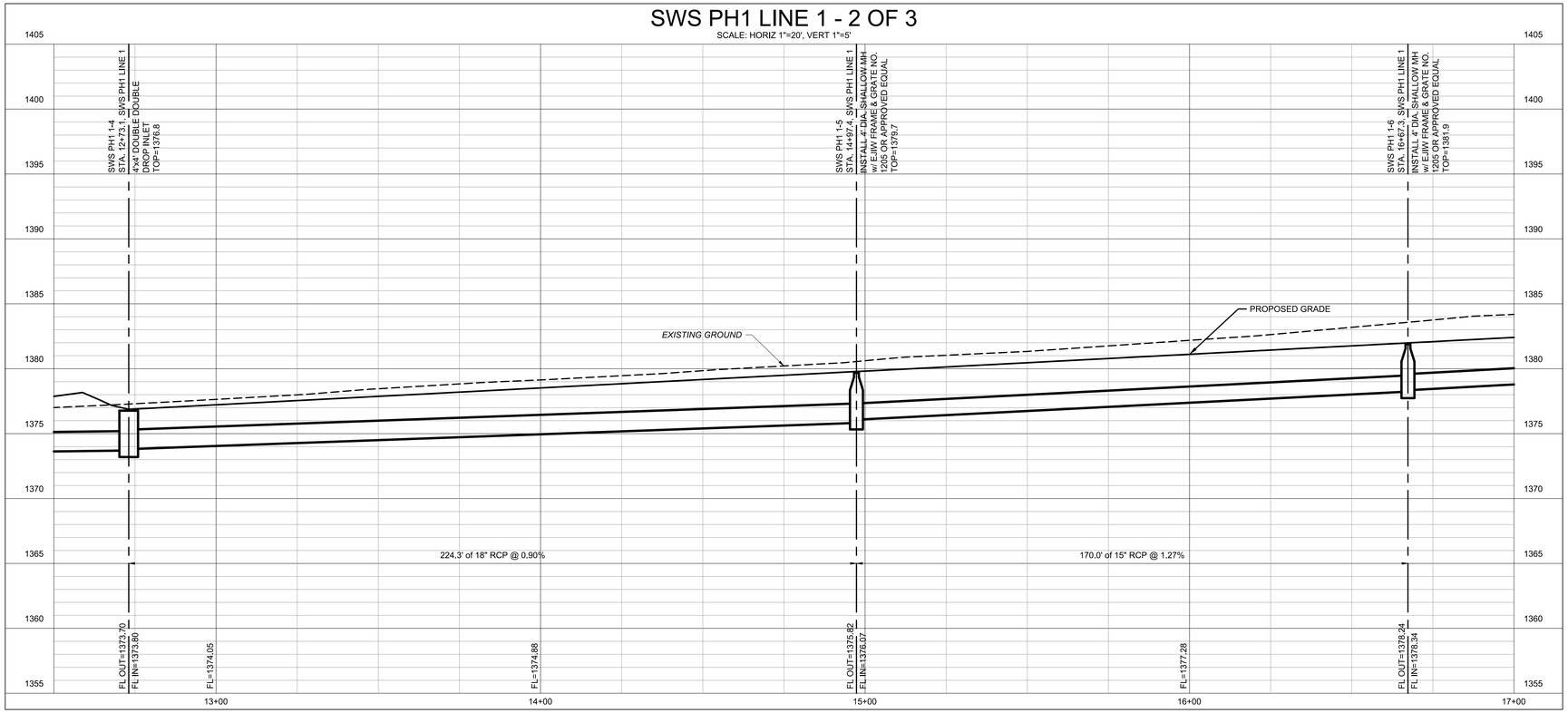


MKEC
Wichita, KS • 316.684.9600

SCOTT PRESTON EVANS
LICENSED
24423
KANSAS
PROFESSIONAL ENGINEER
10/22/26

STORM WATER SEWER #840 PHASE 1

# RIVINGTON ADDITION

WICHITA, KANSAS

LINE 1 (CONT.)

PROJECT NO. 458-2026-085656

SCALE VERT:1"=5' HORIZ: 1"=20'

| DRAWN | DESIGNED | CHECKED |
|---|---|---|
| BWS | DFL | SPE |

| NO. | REVISION | DATE |
|---|---|---|
| 0 | ISSUED FOR CONSTRUCTION | 10/23/2026 |

SHEET NO.
C-202-D01
03 OF 24

©2026 MKEC ENGINEERING, INC. ALL RIGHTS RESERVED WWW.MKEC.COM THESE DRAWINGS AND THEIR CONTENTS, INCLUDING, BUT NOT LIMITED TO, ALL CONCEPTS, DESIGNS, & IDEAS ARE THE EXCLUSIVE PROPERTY OF MKEC ENGINEERING, INC. (MKEC), AND MAY NOT BE USED OR REPRODUCED IN ANY WAY WITHOUT THE EXPRESS CONSENT OF MKEC.

PLOTTED: Wednesday, October 21, 2026 @ 04:31PM
J:\PROJECTS\2025\2501010637 - ARTISTIC_RIVINGTON\00 PW\637 CAD\SHTS\05 CIVIL\SWS\PH1\2501010637_C-202-D01.DWG

PLOTTED: Wednesday, October 21, 2026 @ 04:32PM

NOTE:
CONTRACTOR TO VERIFY THE DEPTH AND LOCATION OF EXISTING UTILITIES PRIOR TO CONSTRUCTION.

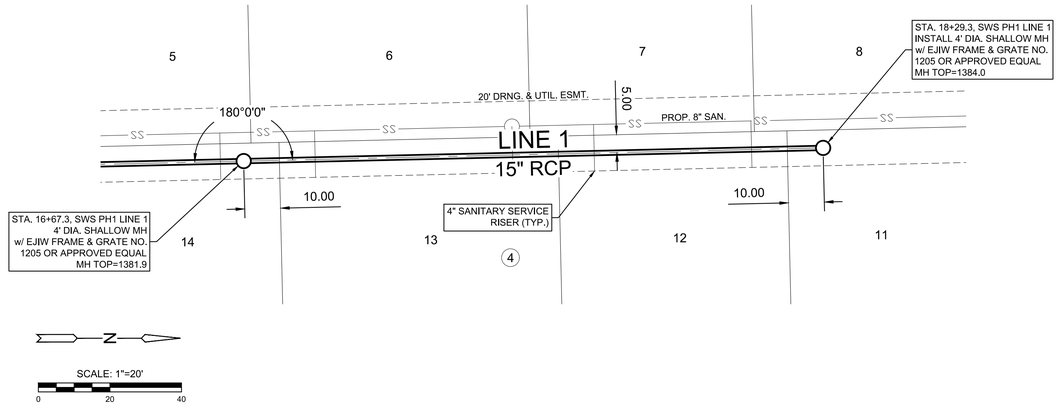


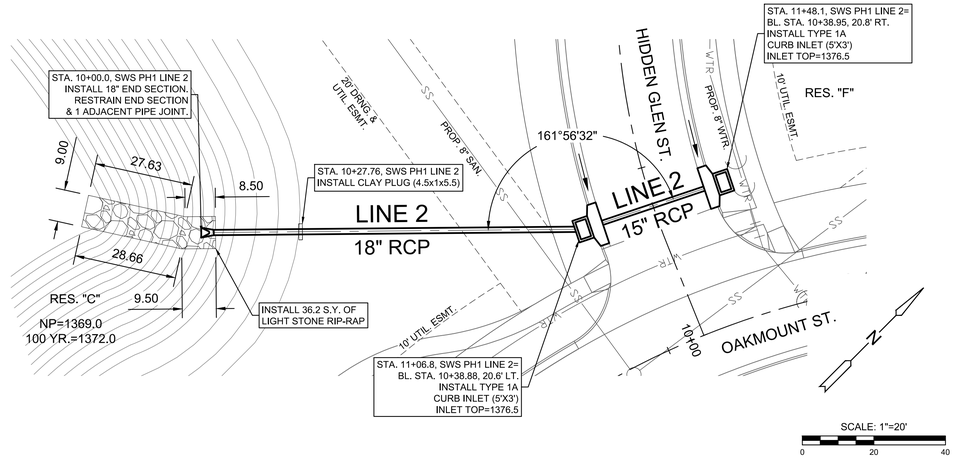


## SWS PH1 LINE 1 - 3 OF 3

SCALE: HORIZ 1"=20', VERT 1"=5'

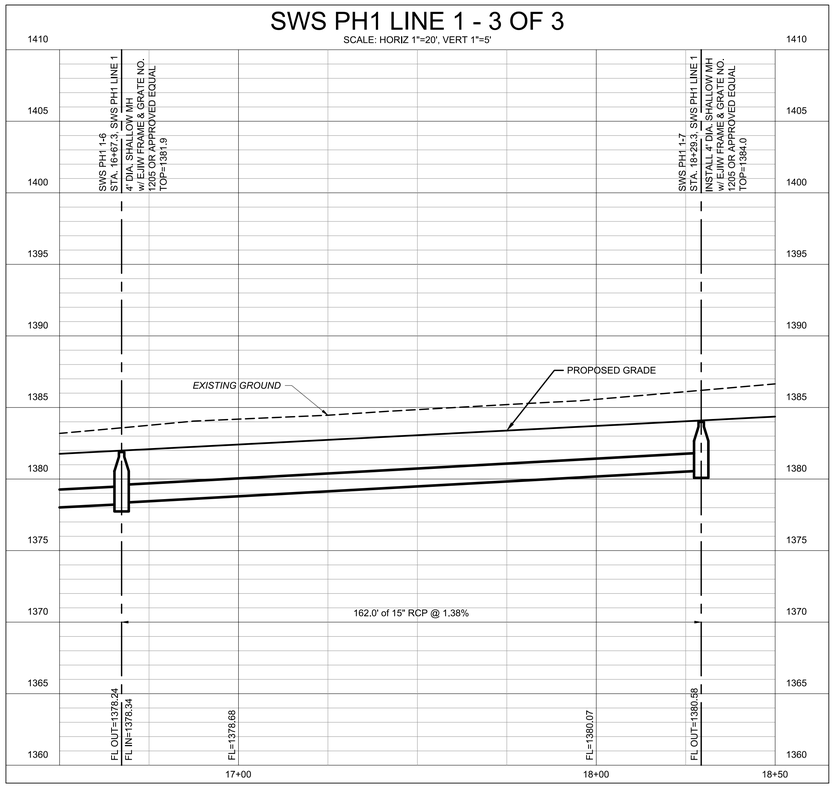


## SWS LINE 2 PH1

SCALE: HORIZ 1"=20', VERT 1"=5'

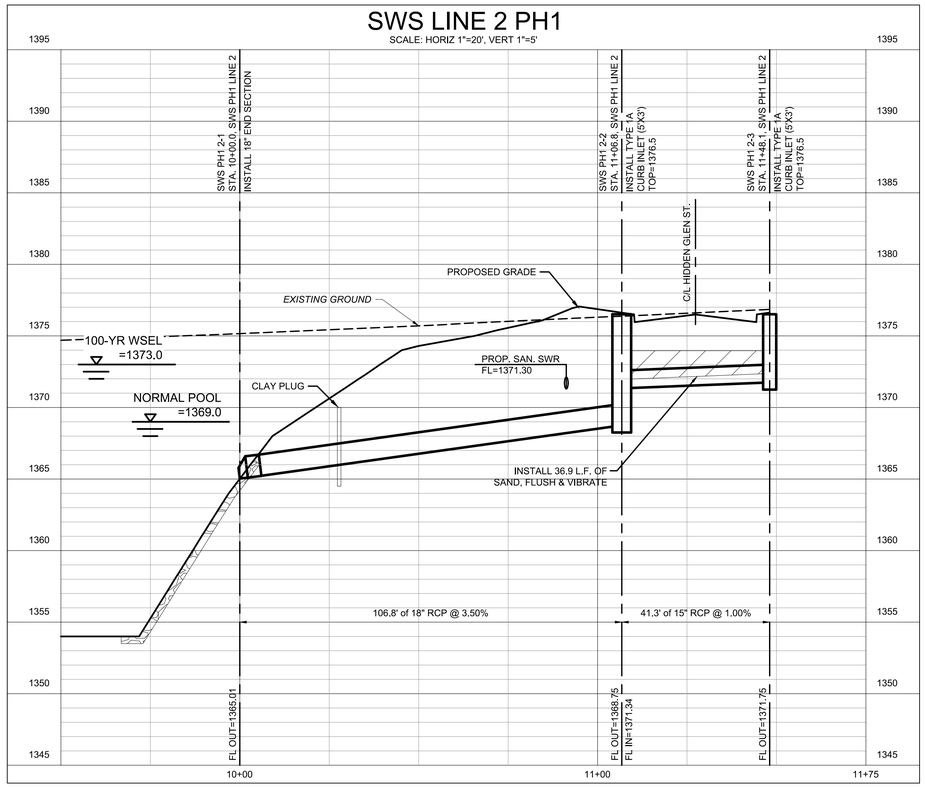


MKEC
Wichita, KS • 316.684.9600

SCOTT PRESTON FLEMING
LICENSED
24423
KANSAS
PROFESSIONAL ENGINEER
10/22/26

STORM WATER SEWER #840 PHASE 1

# RIVINGTON ADDITION

WICHITA, KANSAS

LINE 1 CONT. & 2

PROJECT NO. 458-2026-085656

SCALE: VERT: 1"=5' HORIZ: 1"=20'

| DRAWN | DESIGNED | CHECKED |
|---|---|---|
| BWS | DFL | SPE |

| NO. | REVISION | DATE |
|---|---|---|
| 0 | ISSUED FOR CONSTRUCTION | 10/23/2026 |

SHEET NO.
C-203-D01
04 OF 24

©2026 MKEC ENGINEERING, INC. ALL RIGHTS RESERVED WWW.MKEC.COM THESE DRAWINGS AND THEIR CONTENTS, INCLUDING, BUT NOT LIMITED TO, ALL CONCEPTS, DESIGNS, & IDEAS ARE THE EXCLUSIVE PROPERTY OF MKEC ENGINEERING, INC. (MKEC), AND MAY NOT BE USED OR REPRODUCED IN ANY WAY WITHOUT THE EXPRESS CONSENT OF MKEC.

J:\PROJECTS\2020\2001010637 - ARTISTIC_RIVINGTON\00 250637 CAD\SHTS\05 CIVIL\SWS\PH1\250637_C-203-D01.DWG

PLOTTED: Wednesday, October 21, 2026 @ 04:34PM

NOTE:
CONTRACTOR TO VERIFY THE DEPTH AND LOCATION OF EXISTING UTILITIES PRIOR TO CONSTRUCTION.

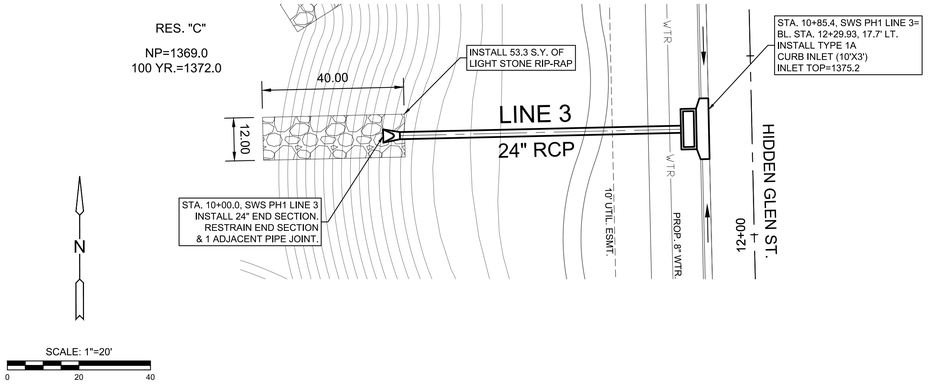


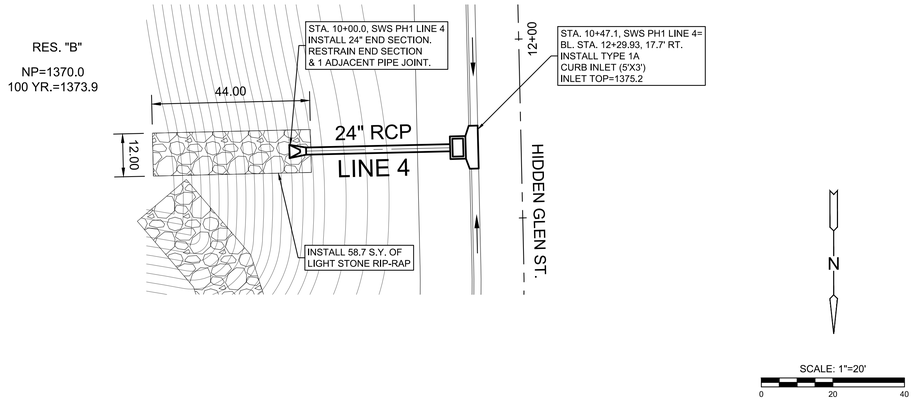


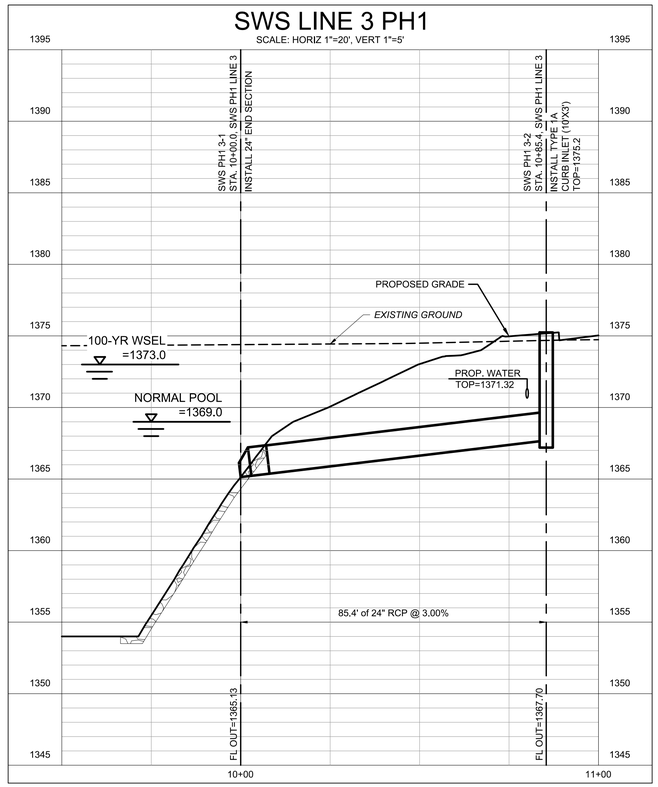


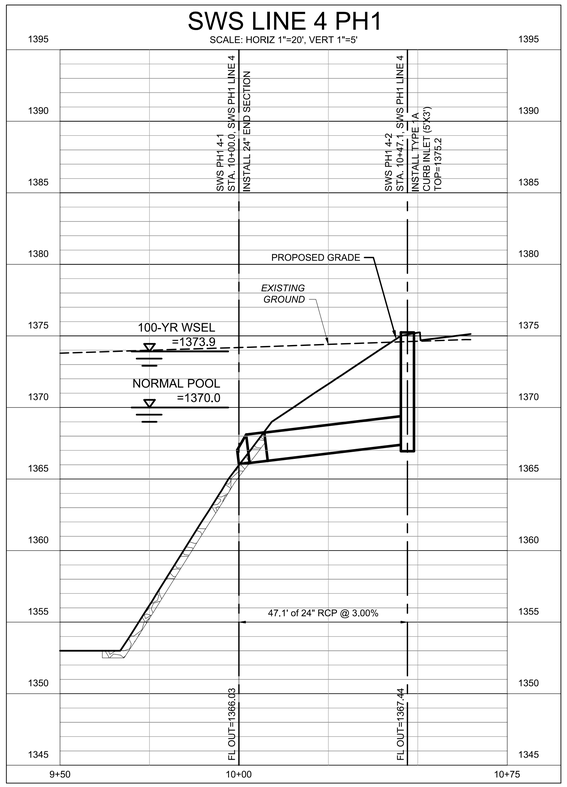


J:\PROJECTS\2025\2501010637 - ARTISTIC_RIVINGTON\00 250637 CAD\SHTS\05 CIVIL\SWS\PH1\250637_C-204-D01.DWG

MKEC
Wichita, KS • 316.684.9600

SCOTT PRESTON LICENSED 24423 KANSAS PROFESSIONAL ENGINEER
10/22/26

STORM WATER SEWER #840 PHASE 1

# RIVINGTON ADDITION

WICHITA, KANSAS

©2026 MKEC ENGINEERING, INC. ALL RIGHTS RESERVED WWW.MKEC.COM THESE DRAWINGS AND THEIR CONTENTS, INCLUDING, BUT NOT LIMITED TO, ALL CONCEPTS, DESIGNS, & IDEAS ARE THE EXCLUSIVE PROPERTY OF MKEC ENGINEERING, INC. (MKEC), AND MAY NOT BE USED OR REPRODUCED IN ANY WAY WITHOUT THE EXPRESS CONSENT OF MKEC.

LINE 3 & 4

| | |
|---|---|
| PROJECT NO. | 458-2026-085656 |
| SCALE | VERT: 1"=5' HORIZ: 1"=20' |
| DRAWN | BWS |
| DESIGNED | DFL |
| CHECKED | SPE |

| NO. | REVISION | DATE |
|---|---|---|
| 0 | ISSUED FOR CONSTRUCTION | 10/23/2026 |

SHEET NO.
C-204-D01
05 OF 24

NOTE:
CONTRACTOR TO VERIFY THE DEPTH AND LOCATION OF EXISTING UTILITIES PRIOR TO CONSTRUCTION.

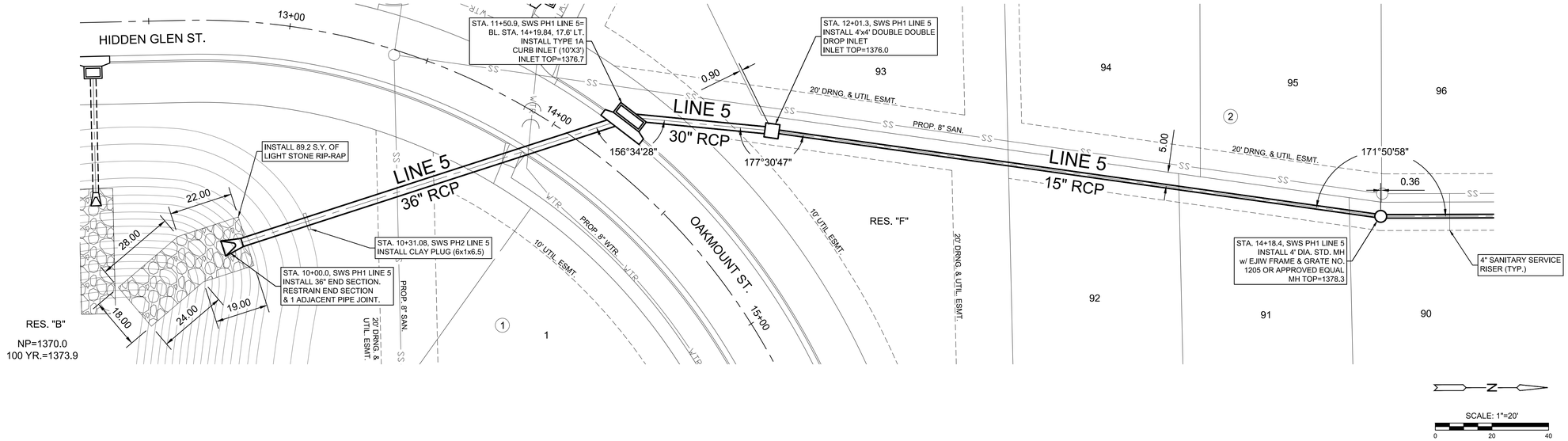


N

SCALE: 1"=20'
0 20 40

## SWS PH1 LINE 5 - 1 OF 2

SCALE: HORIZ 1"=20', VERT 1"=5'

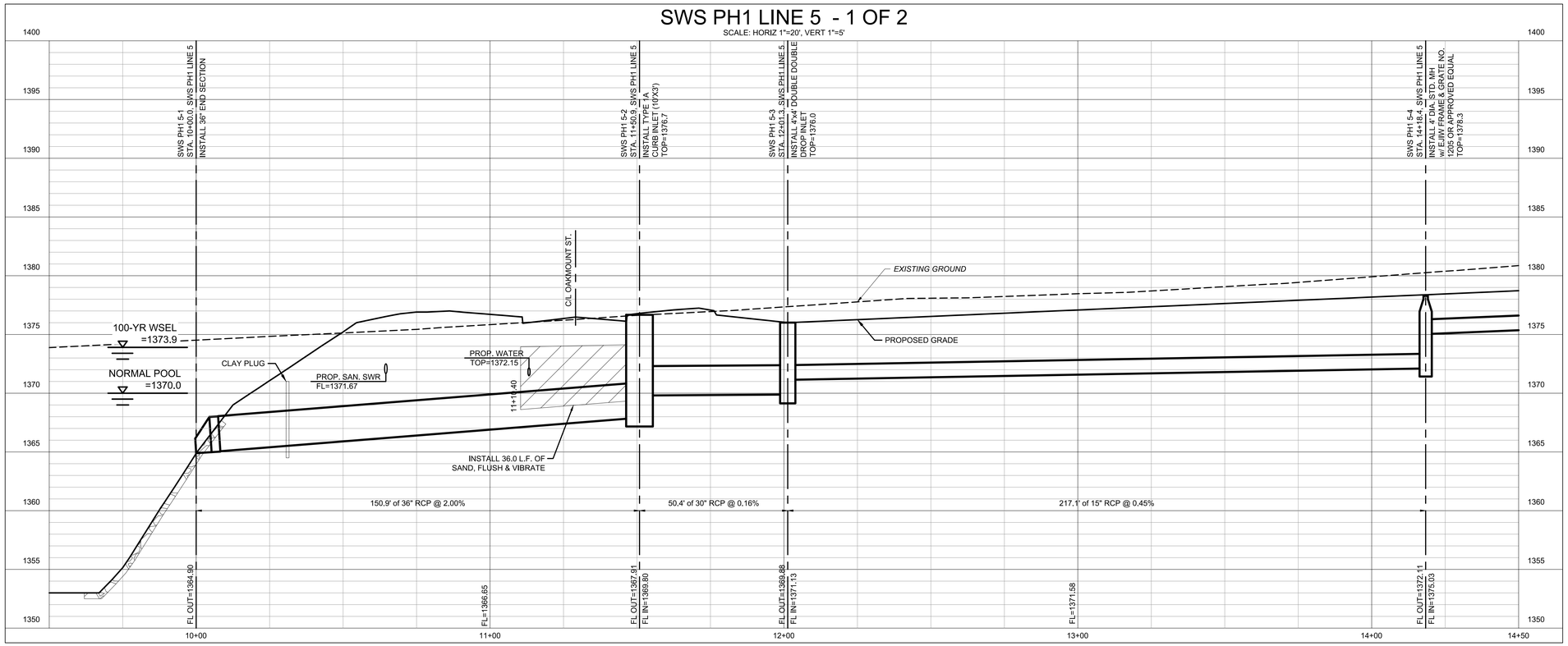


MKEC
Wichita, KS • 316.684.9600

SCOTT PRESTON LICENSED 24423 KANSAS PROFESSIONAL ENGINEER
10/22/26

STORM WATER SEWER #840 PHASE 1

# RIVINGTON ADDITION

WICHITA, KANSAS

LINE 5

| | |
|---|---|
| PROJECT NO. | 458-2026-085656 |
| SCALE | VERT: 1"=5' HORIZ: 1"=20' |
| DRAWN | BWS |
| DESIGNED | DFL |
| CHECKED | SPE |

| NO. | REVISION | DATE |
|---|---|---|
| 0 | ISSUED FOR CONSTRUCTION | 10/23/2026 |

SHEET NO.
C-205-D01
06 OF 24

©2026 MKEC ENGINEERING, INC. ALL RIGHTS RESERVED WWW.MKEC.COM THESE DRAWINGS AND THEIR CONTENTS, INCLUDING, BUT NOT LIMITED TO, ALL CONCEPTS, DESIGNS, & IDEAS ARE THE EXCLUSIVE PROPERTY OF MKEC ENGINEERING, INC. (MKEC), AND MAY NOT BE USED OR REPRODUCED IN ANY WAY WITHOUT THE EXPRESS CONSENT OF MKEC.

PLOTTED: Wednesday, October 21, 2026 @ 04:39PM
J:\PROJECTS\2025\2501010637 - ARTISTIC_RIVINGTON\00 250637 CAD\SHTS\05 CIVIL\SWS\PH1\250637_C-205-D01.DWG

PLOTTED: Wednesday, October 21, 2026 @ 04:38PM

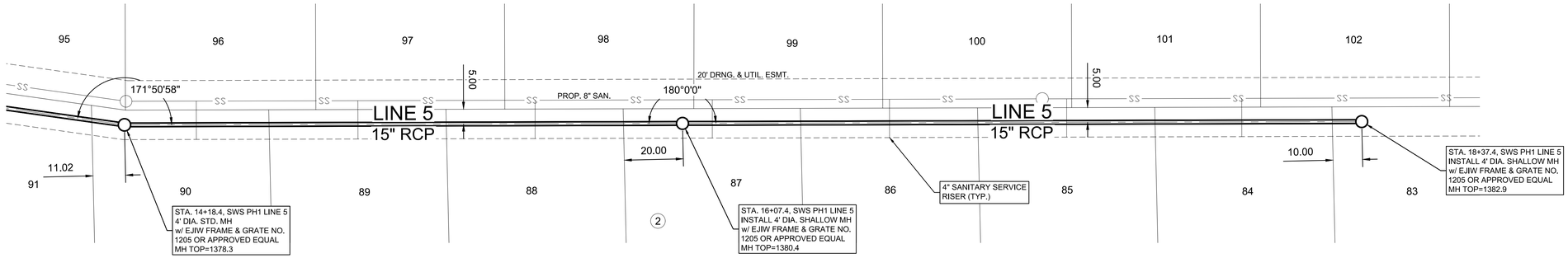


NOTE:
CONTRACTOR TO VERIFY THE DEPTH AND LOCATION OF EXISTING UTILITIES PRIOR TO CONSTRUCTION.

N

SCALE: 1"=20'
0 20 40

## SWS PH1 LINE 5 - 2 OF 2

SCALE: HORIZ 1"=20', VERT 1"=5'

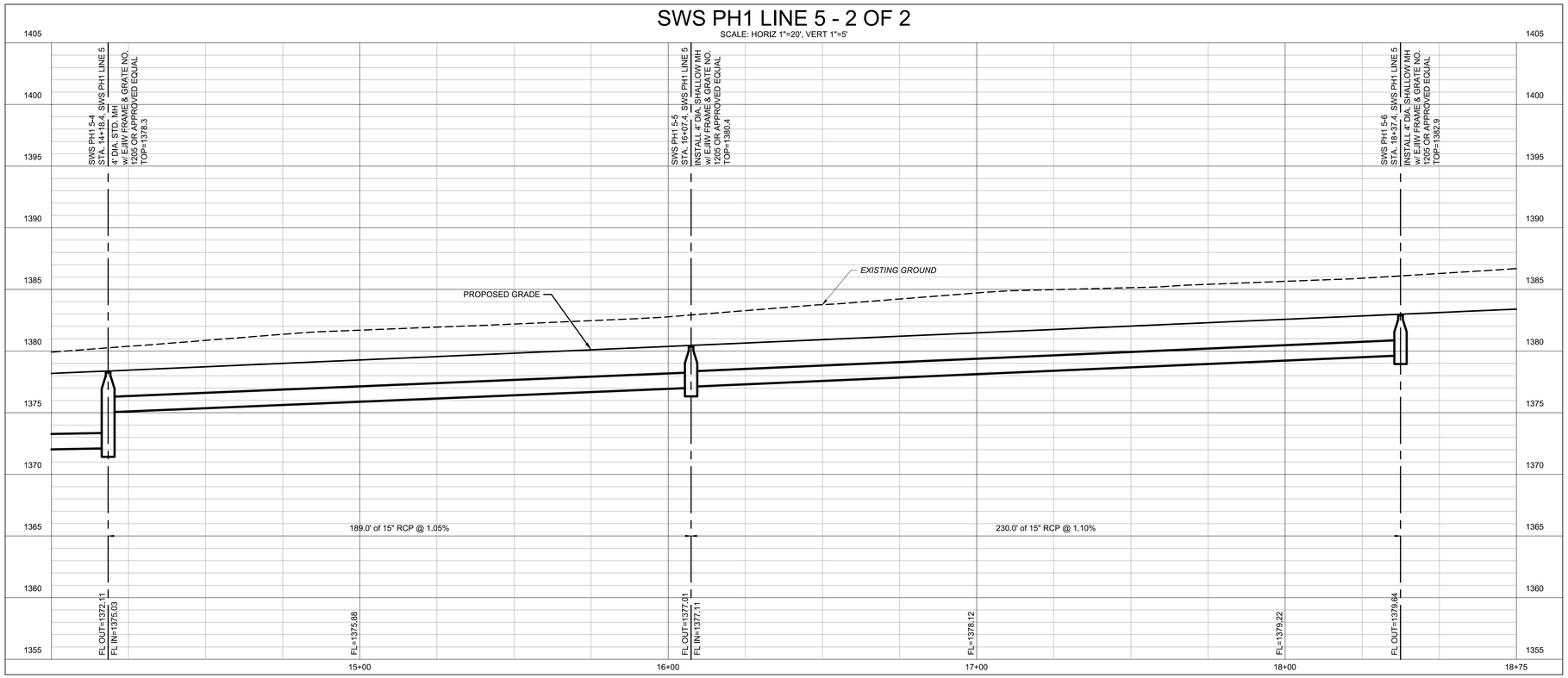


MKEC
Wichita, KS • 316.684.9600

SCOTT PRESTON LICENSED 24423 KANSAS PROFESSIONAL ENGINEER
10/22/26

STORM WATER SEWER #840 PHASE 1

# RIVINGTON ADDITION

WICHITA, KANSAS

LINE 5 (CONT.)

PROJECT NO. 458-2026-085656

SCALE VERT: 1"=5' HORIZ: 1"=20'

| DRAWN | DESIGNED | CHECKED |
|---|---|---|
| BWS | DFL | SPE |

| NO. | REVISION | DATE |
|---|---|---|
| 0 | ISSUED FOR CONSTRUCTION | 10/23/2026 |

SHEET NO.
C-206-D01
07 OF 24

©2026 MKEC ENGINEERING, INC. ALL RIGHTS RESERVED WWW.MKEC.COM THESE DRAWINGS AND THEIR CONTENTS, INCLUDING, BUT NOT LIMITED TO, ALL CONCEPTS, DESIGNS, & IDEAS ARE THE EXCLUSIVE PROPERTY OF MKEC ENGINEERING, INC. (MKEC), AND MAY NOT BE USED OR REPRODUCED IN ANY WAY WITHOUT THE EXPRESS CONSENT OF MKEC.

J:\PROJECTS\2025\2501010637 - ARTISTIC_RIVINGTON\00\250637 CAD\SHTS\05 CIVIL\SWS\PH1\250637_C-206-D01.DWG

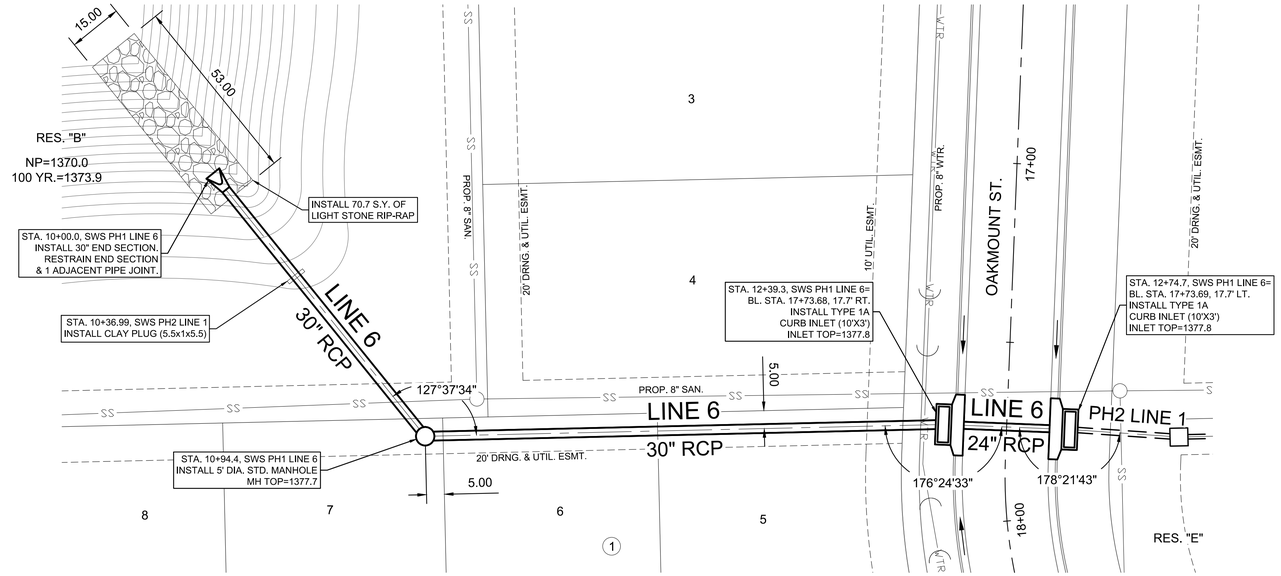


NOTE:
CONTRACTOR TO VERIFY THE DEPTH AND LOCATION OF EXISTING UTILITIES PRIOR TO CONSTRUCTION.

N

SCALE: 1"=20'

0 20 40

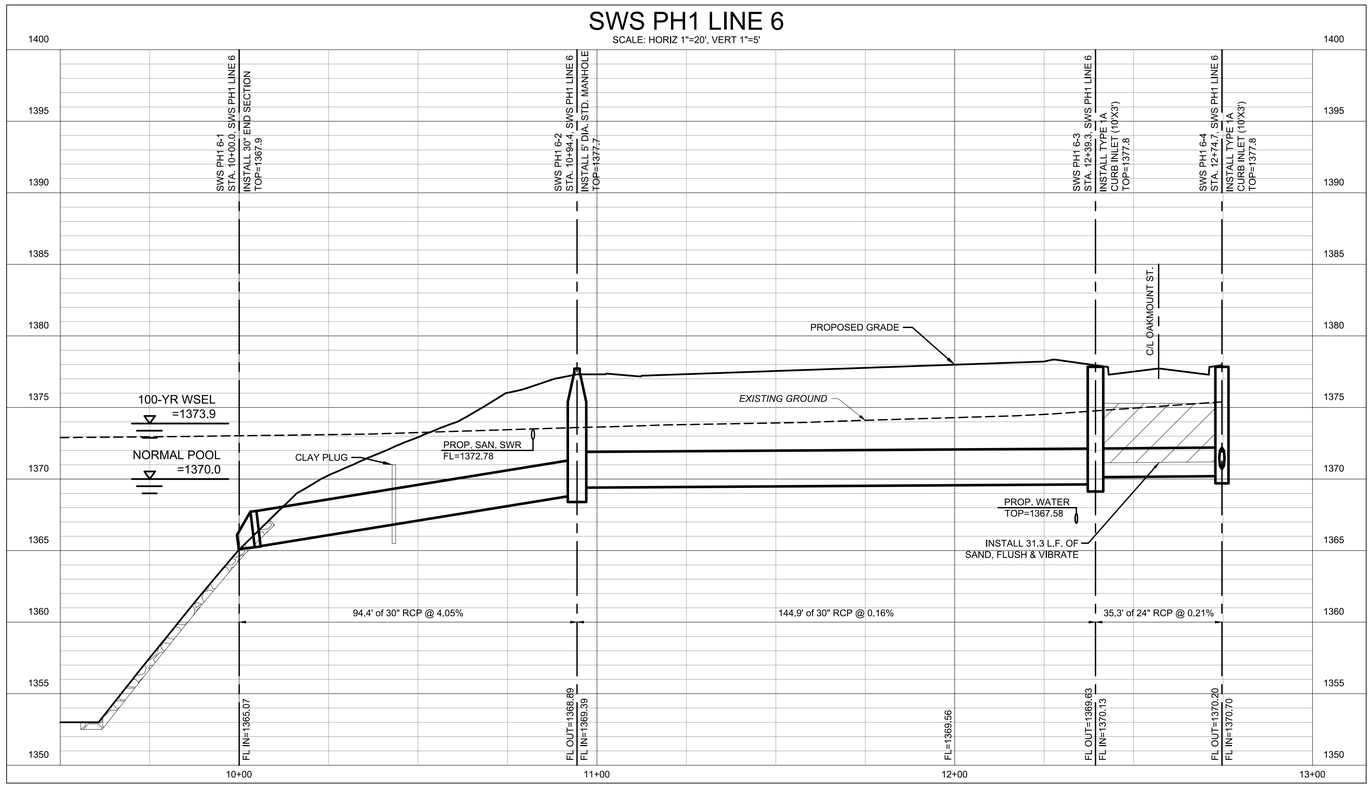


MKEC
Wichita, KS • 316.684.9600

SCOTT PRESTON LICENSED LICENSE NUMBER 24423 PROFESSIONAL ENGINEER KANSAS
10/22/26

STORM WATER SEWER #840 PHASE 1

# RIVINGTON ADDITION

WICHITA, KANSAS

LINE 6

PROJECT NO. 458-2026-085656
SCALE VERT: 1"=5' HORIZ: 1"=20'
DRAWN BWS DESIGNED DFL CHECKED SPE

| NO. | REVISION | DATE |
|---|---|---|
| 0 | ISSUED FOR CONSTRUCTION | 10/23/2026 |

SHEET NO.
C-207-D01
08 OF 24

©2026 MKEC ENGINEERING, INC. ALL RIGHTS RESERVED WWW.MKEC.COM THESE DRAWINGS AND THEIR CONTENTS, INCLUDING, BUT NOT LIMITED TO, ALL CONCEPTS, DESIGNS, & IDEAS ARE THE EXCLUSIVE PROPERTY OF MKEC ENGINEERING, INC. (MKEC), AND MAY NOT BE USED OR REPRODUCED IN ANY WAY WITHOUT THE EXPRESS CONSENT OF MKEC.

PLOTTED: Wednesday, October 21, 2026 @ 04:37PM
J:\PROJECTS\2025\2501010637 - ARTISTIC_RIVINGTON\00 250637 CAD\SHTS\05 CIVIL\SWS\PH1\250637_C-207-D01.DWG

PLOTTED: Wednesday, October 21, 2026 @ 04:38PM

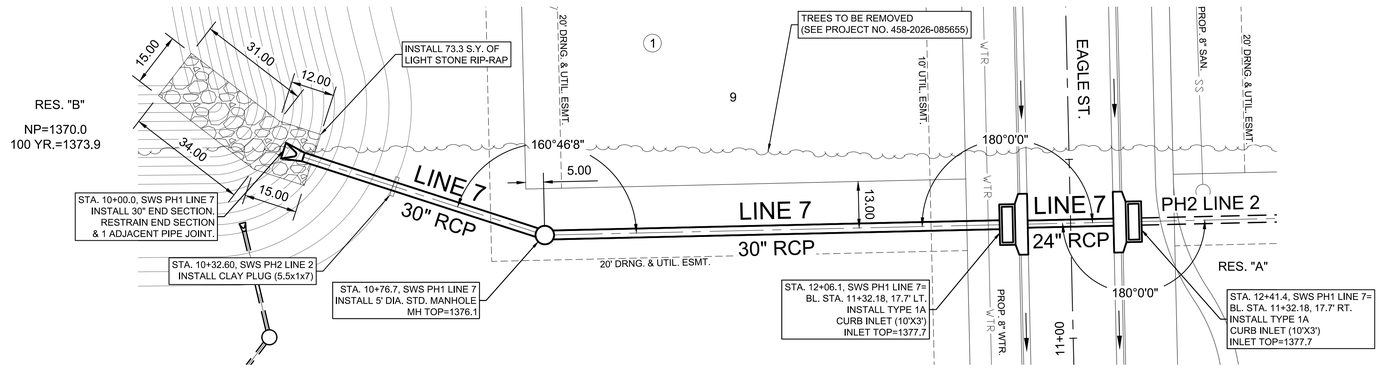


NOTE:
CONTRACTOR TO VERIFY THE DEPTH AND LOCATION OF EXISTING UTILITIES PRIOR TO CONSTRUCTION.

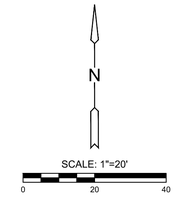


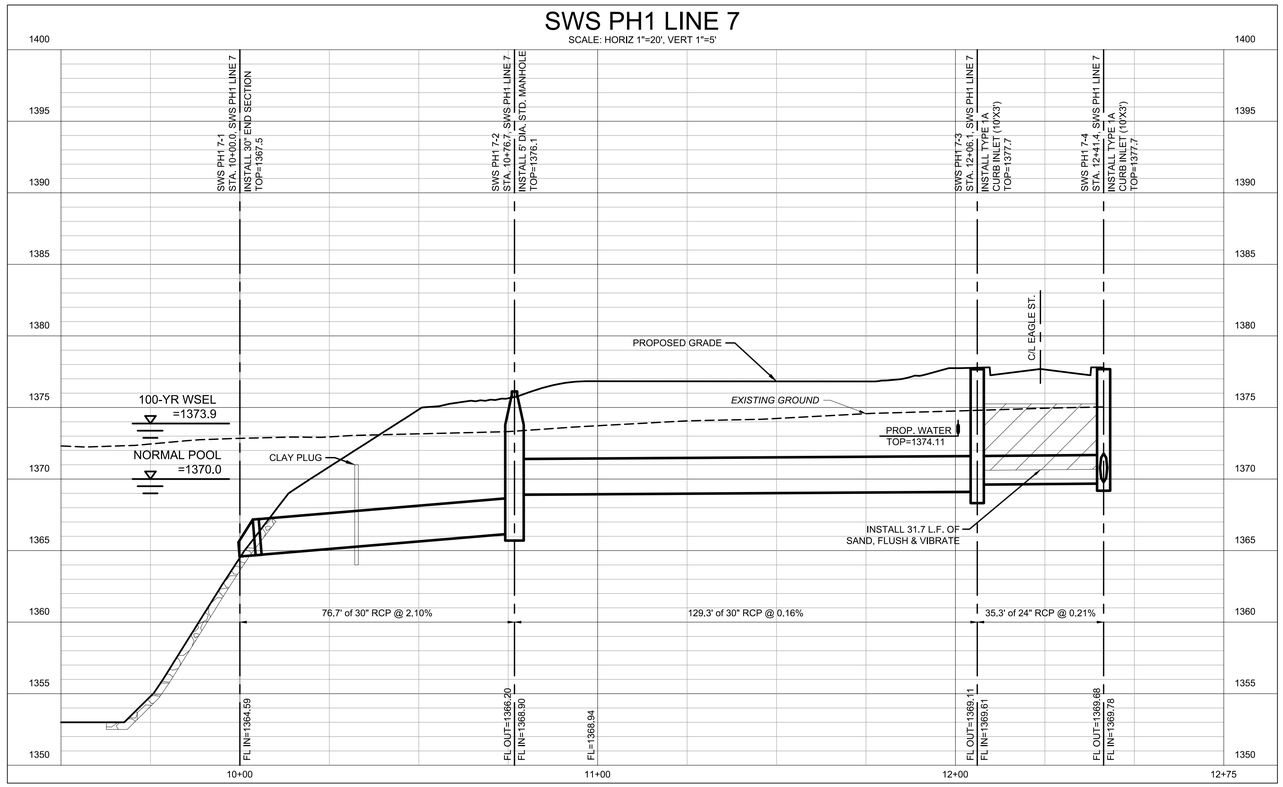


MKEC
Wichita, KS • 316.684.9600

SCOTT PRESTON ENSLEY
LICENSED
24423
KANSAS
PROFESSIONAL ENGINEER
10/22/26

STORM WATER SEWER #840 PHASE 1

# RIVINGTON ADDITION

WICHITA, KANSAS

LINE 7

| | |
|---|---|
| PROJECT NO. | 458-2026-085656 |
| SCALE | VERT: 1"=5'<br>HORIZ: 1"=20' |
| DRAWN | BWS |
| DESIGNED | DFL |
| CHECKED | SPE |

| NO. | REVISION | DATE |
|---|---|---|
| 0 | ISSUED FOR CONSTRUCTION | 10/23/2026 |

SHEET NO.
C-208-D01
09 OF 24

©2026 MKEC ENGINEERING, INC. ALL RIGHTS RESERVED WWW.MKEC.COM THESE DRAWINGS AND THEIR CONTENTS, INCLUDING, BUT NOT LIMITED TO, ALL CONCEPTS, DESIGNS, & IDEAS ARE THE EXCLUSIVE PROPERTY OF MKEC ENGINEERING, INC. (MKEC), AND MAY NOT BE USED OR REPRODUCED IN ANY WAY WITHOUT THE EXPRESS CONSENT OF MKEC.

J:\PROJECTS\2025\2501010637 - ARTISTIC_RIVINGTON\00 250637 CAD\SHTS\05 CIVIL\SWS\PH1\250637_C-208-D01.DWG

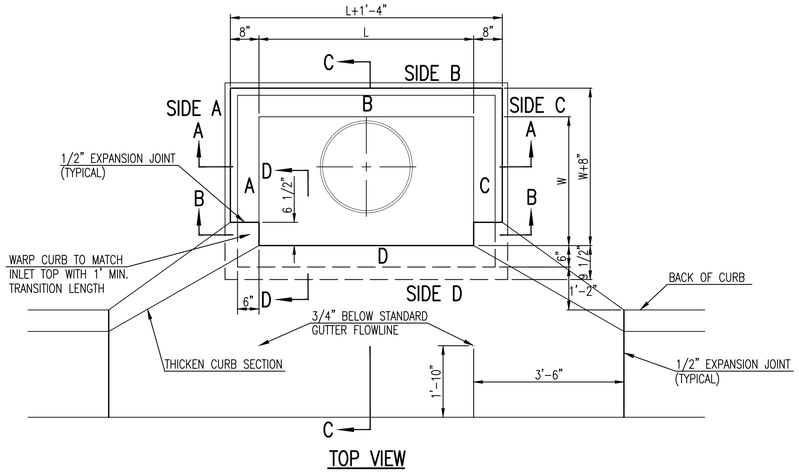


TOP VIEW

| BAR SCHEDULE | | |
|---|---|---|
| INLET OPENING | B1 BARS | SPACING |
| 5'-0" | #4 | 4" |
| 10'-0" | #6 | 3.5" |

| PRECAST CURB INLET WIDTHS | | | | |
|---|---|---|---|---|
| W | PRE-CAST TOP SIZE | | | PIPE DIA.** |
| | WIDTH | LENGTH | TOP | |
| 3'-0" | W+8" | L+1'-4" | 7 1/2" | 21" & SMALLER |
| 4'-0" | W+8" | L+1'-4" | 7 1/2" | 24" & 30" |
| 5'-0" | W+8" | L+1'-4" | 7 1/2" | 36" & 42" |
| 6'-0" | W+8" | L+1'-4" | 7 1/2" | 48" & 54" |
| 7'-0" | W+8" | L+1'-4" | 7 1/2" | 60" & 66" |

** FOR PIPES PERPENDICULAR TO INLET WALL

## GENERAL NOTES

1. CONCRETE TOPS TO BE INSTALLED ON THIN MORTAR CUSHION TO INSURE FULL SUPPORT ALONG BRICK. CONCRETE TOPS MAY BE CAST IN PLACE OR PRECAST. CONCRETE USED FOR INLET CONSTRUCTION SHALL CONFORM TO CITY OF WICHITA SPECIFICATIONS FOR CONCRETE PAVEMENT MIX.
2. CONTRACTOR SHALL HAVE THE OPTION OF CONSTRUCTING 8" BRICK MASONRY WALLS BETWEEN THE CONCRETE INLET BASE AND TOP OF THIS INLET WHEN W=5'-0" AND H=7'-0" OR LESS.
3. INLET INVERT SHALL BE SHAPED WITH 8 SACK SAND MIX CONCRETE TO CREATE FLOW CHANNELS AND TO INCREASE HYDRAULIC EFFICIENCY SUCH THAT THE INLET WILL BE SELF CLEANING BETWEEN ALL INLET AND/OR OUTLET PIPES.
4. THE ENDS OF ALL PIPES INSTALLED IN INLETS SHALL BE CUT OFF FLUSH WITH THE INSIDE FACE OF THE INLET WALL.
5. INLET FRAME AND COVER TO BE DEETER #2014, EJIW #1936-Z4, OR APPROVED EQUAL, SEE SW-303.
6. CONTRACTOR SHALL REMOVE LIFTING HOOKS AFTER INSTALLATION. RECESSES IN INLET WALL SHALL BE GROUTED FLUSH TO THE INLET WALL WITH HYDRAULIC CEMENT AFTER THE INLET IS IN PLACE. LIFTING HOLES THRU THE INLET WALL WILL NOT BE ACCEPTED.

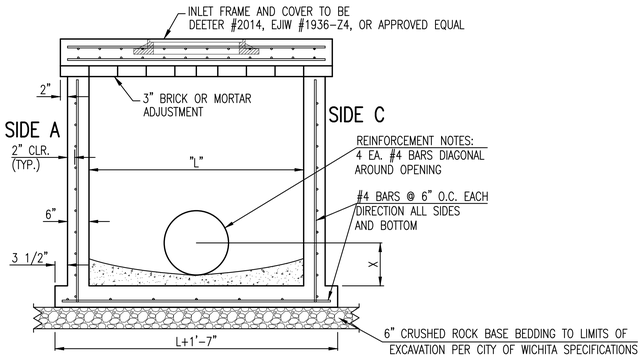


SECTION "A-A"

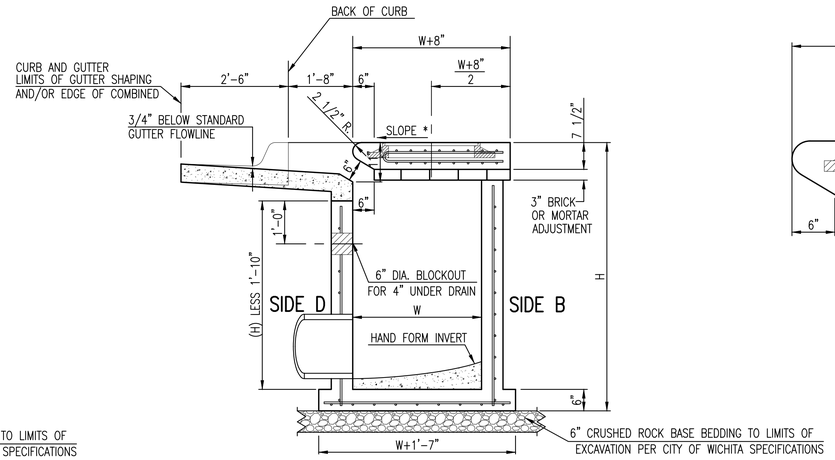


SECTION "C-C"

NOTES:
* SLOPE OF INLET TOP TO MATCH SIDEWALK OR PARKING SLOPES WITHIN LIMITS INDICATED.

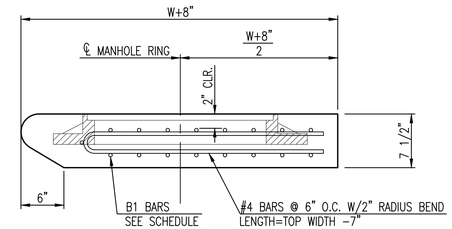


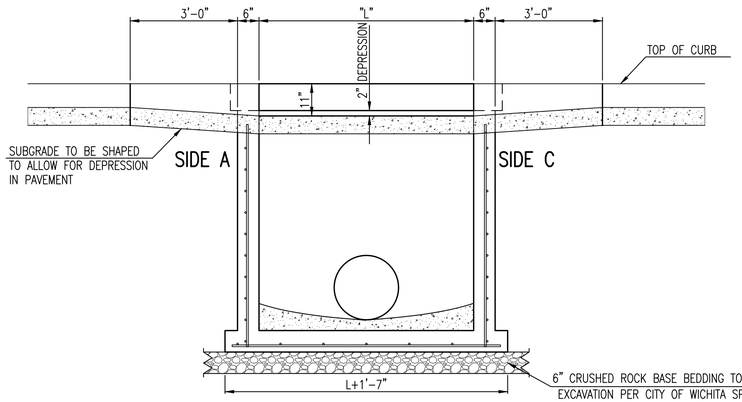


SECTION "B-B"

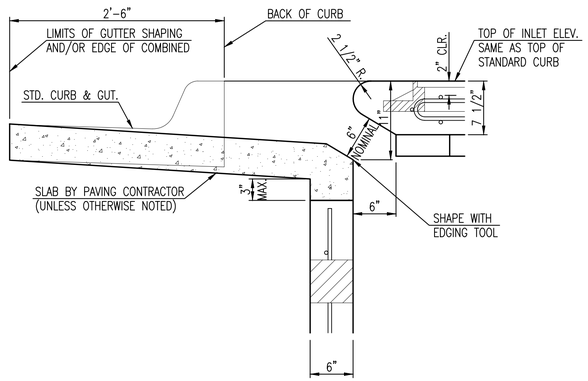


SECTION "D-D"

| REVISION MAY 2017 | UPDATED SET BACK DIMENSION ON TOP VIEW |
|---|---|

CITY OF WICHITA
PUBLIC WORKS & UTILITIES
ENGINEERING DIVISION

# STANDARD TYPE 1A CURB INLET 5'-0" OR 10'-0" OPENING

CITY ENGINEER
GARY JANZEN, P.E.

| PROJECT NUMBER | OCA NUMBER | DATE |
|---|---|---|
| 458-2026-085656 | | ##-##-## |

CITY ENGINEER'S OFFICE
CITY HALL - SEVENTH FLOOR
455 NORTH MAIN STREET
WICHITA, KANSAS 67202-1620
(316) 268-4501

SHEET
C-501-D01
10 OF 24

SW-103

J:\Projects\2025\2501010637 - Artistic_Rivington\00 250637 CAD\SHTS\05 Civil\Sws\PH1\250637_C-501-D01.dwg

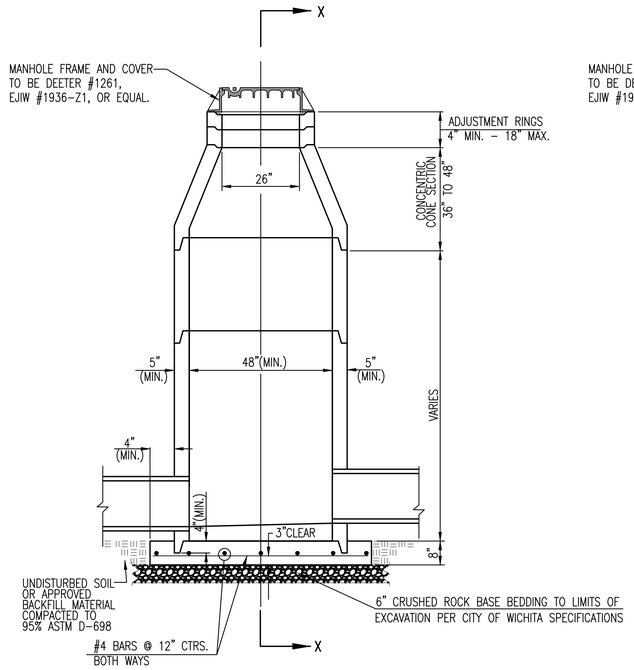


PRECAST
STANDARD MANHOLE
TYPE "A"

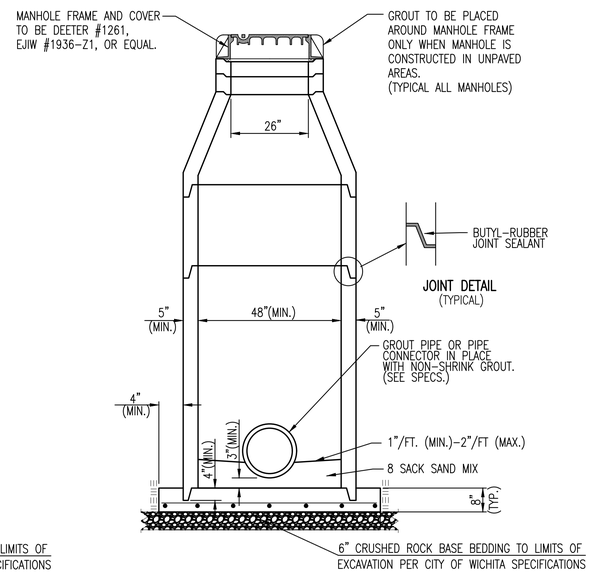


SECTION X-X
(TYPICAL)

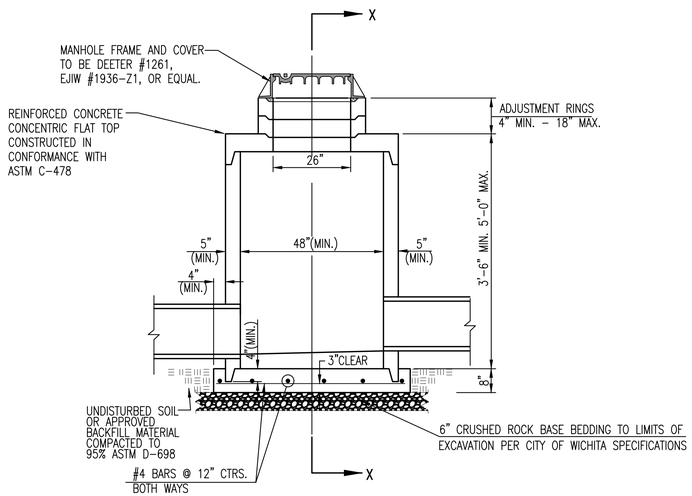


PRECAST
SHALLOW MANHOLE
TYPE "B"

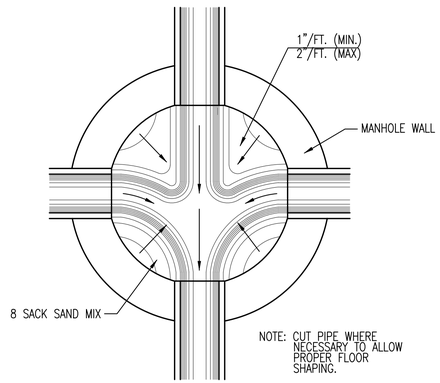


TYPICAL MANHOLE
FLOOR SHAPING

## GENERAL NOTES

1. IF, IN THE OPINION OF THE ENGINEER, THE MANHOLE SUBGRADE APPEARS UNSTABLE, THE CONTRACTOR WILL HAVE THE OPTION TO COMPACT SUBGRADE AS SHOWN OR INCREASE THE THICKNESS OF THE MANHOLE BASE AS DIRECTED BY THE ENGINEER.
2. STEEL REINFORCING WILL BE REQUIRED IN ALL MANHOLE BASES.
3. ALL MANHOLE CONSTRUCTION SHALL BE WATER TIGHT.
4. TOP OF MANHOLE FLOOR SLAB SHALL BE AT LEAST 3 INCHES BELOW THE FLOW LINE OF THE OUTLET PIPE TO INSURE SUFFICIENT MINIMUM THICKNESS OF SHAPED INVERT.
5. ALL PRECAST CONCRETE MANHOLE SECTIONS SHALL CONFORM TO THE LATEST REVISION OF ASTM C-478 AS MODIFIED BY THE SPECIFICATIONS.
6. CONCRETE USED FOR MANHOLE CONSTRUCTION SHALL CONFORM TO CITY OF WICHITA SPECIFICATIONS FOR CONCRETE PAVEMENT MIX.
7. PRECAST MANHOLES SHALL BE SET AT LEAST 4 INCHES INTO MANHOLE BASE.
8. MANHOLES WITH PIPE SIZES 24" AND LARGER SHALL HAVE 5 FOOT INSIDE DIAMETER (MIN.)
9. MANHOLES WITH PRECAST BASES MAY BE USED AT THE CONTRACTORS OPTION. THESE MANHOLES SHALL HAVE AN 8" MINIMUM BASE THICKNESS AND SHALL BE PLACED ON AN 8" MIN. CRUSHED ROCK BASE. PIPES SHALL BE ENCASED WITH CRUSHED ROCK TO AT LEAST 3 FEET FROM THE MANHOLE WALL.
10. CONTRACTOR SHALL REMOVE LIFTING HOOKS AFTER INSTALLATION. RECESSES IN MANHOLE WALL SHALL BE GROUTED FLUSH TO THE MANHOLE WALL WITH HYDRAULIC CEMENT AFTER THE MANHOLE IS IN PLACE. LIFTING HOLES THRU THE MANHOLE WALL WILL NOT BE ACCEPTED.
11. THE ENDS OF ALL PIPES IN MANHOLES SHALL BE CUT OFF FLUSH WITH THE INSIDE FACE OF THE MANHOLE WALL.
12. MANHOLE INVERT SHALL BE SHAPED WITH 8 SACK SAND MIX CONCRETE TO CREATE FLOW CHANNELS AND TO INCREASE HYDRAULIC EFFICIENCY SUCH THAT THE MANHOLE WILL BE SELF CLEANING BETWEEN ALL INLET AND/OR OUTLET PIPES.
13. MANHOLE FRAME AND COVER TO BE DEETER #1261, EJIW #1936-Z1, OR APPROVED EQUAL, SEE SW-303.
14. FOR FLAT GRATED INLET APPLICATION, GRATE TO BE DEETER #1933, EJIW #1205 MDI, OR APPROVED EQUAL.
15. FOR BEEHIVE GRATE APPLICATION, GRATE TO BE DEETER #4495, EJIW #120545, OR APPROVED EQUAL.

REVISED: MARCH 2015

CITY OF WICHITA
PUBLIC WORKS & UTILITIES
ENGINEERING DIVISION

# PRECAST CONCRETE MANHOLE (STORM SEWER)

CITY ENGINEER
GARY JANZEN, P.E.

| PROJECT NUMBER | OCA NUMBER | DATE |
|---|---|---|
| 458-2026-085656 | #### | DATE |

CITY ENGINEER'S OFFICE
CITY HALL - SEVENTH FLOOR
455 NORTH MAIN STREET
WICHITA, KANSAS 67202-1620
(316) 268-4501

SHEET
11 OF 24

SW-301

Saved 08-20-2026 7:52:33 AM by JBSCHEUBER
Plot Scale 1:1 10-21-2026 4:38:28 PM by BRYGEN SCHEUBER
J:\Projects\2025\2501010637 - Artistic_Rivington\00 250637 CAD\SHTS\05 Civil\Sws\PH1\250637_C-502-001

J:\Projects\2025\2501010637 - Artistic_Rivington\00 250637 CAD\SHTS\05 Civil\Sws\PH1\250637_C-502-D01.dwg

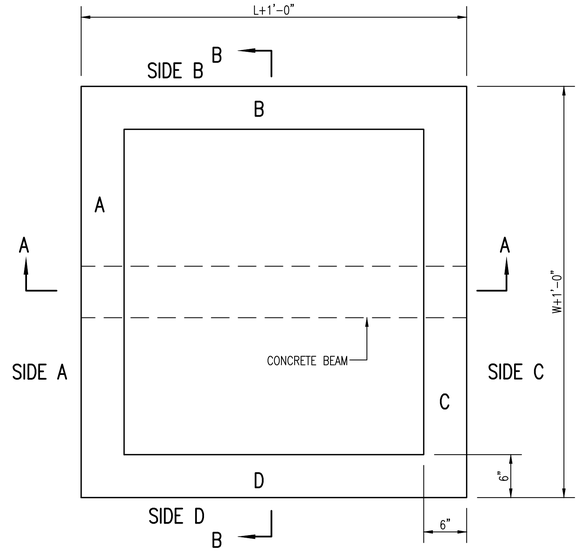


TOP VIEW

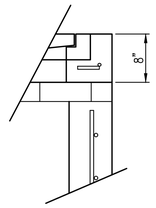


FLUSH STYLE TOP
NO APRON

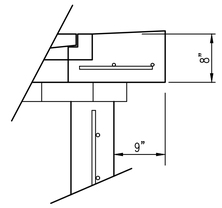


9" APRON

* APRON TO EXTEND ON ALL 4 SIDES OF INLET. DESIGNER TO DESIGNATE APRON SIZE.

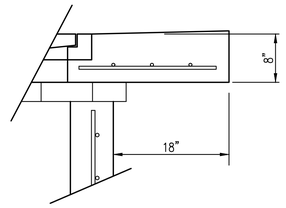


18" APRON

BEAM REQUIRED FOR THIS INLET

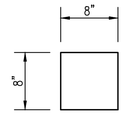


CONCRETE BEAM POCKET

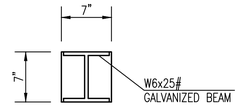


GALV. STEEL BEAM POCKET

W=4'-4" and L=4' for DOUBLE DROP INLET

The structure(s) on this detail sheet are designed for HS-20 loading at these specific dimensions only. If larger dimensions are required, the ENGINEER shall provide a project specific structure design for approval by the City Engineer's office.

## GENERAL NOTES

1. GRATE FRAME TO BE INSTALLED ON THIN MORTAR CUSHION TO INSURE FULL SUPPORT ALONG BRICK. CONCRETE USED FOR INLET CONSTRUCTION SHALL CONFORM TO CITY OF WICHITA SPECIFICATIONS FOR CONCRETE PAVEMENT MIX.
2. INLET INVERT SHALL BE SHAPED WITH 8 SACK SAND MIX CONCRETE TO CREATE FLOW CHANNELS AND TO INCREASE HYDRAULIC EFFICIENCY SUCH THAT THE INLET WILL BE SELF CLEANING BETWEEN ALL INLET AND/OR OUTLET PIPES.
3. THE ENDS OF ALL PIPES INSTALLED IN INLETS SHALL BE CUT OFF FLUSH WITH THE INSIDE FACE OF THE INLET WALL.
4. INLET FRAME AND GRATE TO BE DEETER #2433, EJIW #5391-Z1 OR APPROVED EQUAL FOR 2'x2' SINGLE DROP INLET AND DEETER #2434, EJIW #5391 Z3 OR APPROVED EQUAL FOR 2'x4' DOUBLE DROP INLET.
5. CONTRACTOR SHALL REMOVE LIFTING HOOKS AFTER INSTALLATION. RECESSES IN INLET WALL SHALL BE GROUTED FLUSH TO THE INLET WALL WITH HYDRAULIC CEMENT AFTER THE INLET IS IN PLACE. LIFTING HOLES THRU THE INLET WALL WILL NOT BE ACCEPTED.

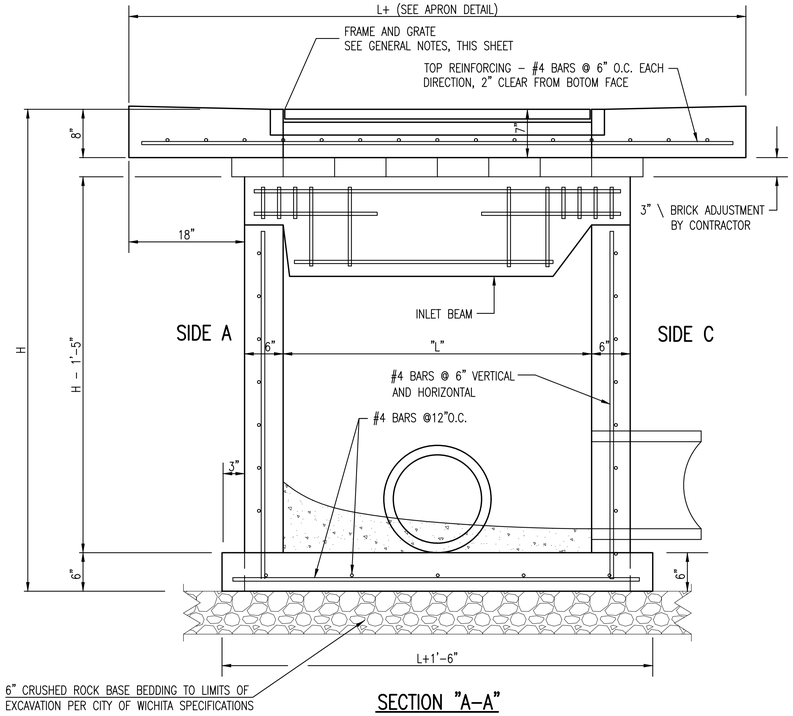


SECTION "A-A"

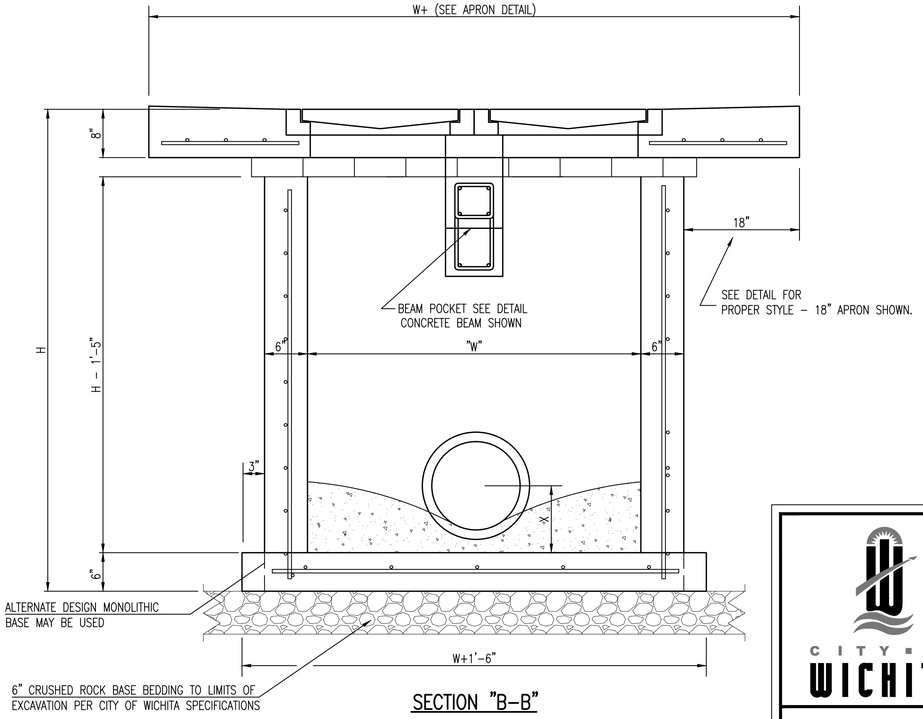


SECTION "B-B"

REVISED: MARCH 2015

CITY OF WICHITA
PUBLIC WORKS & UTILITIES
ENGINEERING DIVISION

DOUBLE DOUBLE
DROP INLET
WITH BEAM

CITY ENGINEER
GARY JANZEN, P.E..

| PROJECT NUMBER | OCA NUMBER | DATE |
|---|---|---|
| 458-2026-085656 | #### | DATE |

CITY ENGINEER'S OFFICE
CITY HALL - SEVENTH FLOOR
455 NORTH MAIN STREET
WICHITA, KANSAS 67202-1620
(316) 268-4501

SHEET
C-503-D01 OF

SW-202

Saved 10-13-2026 9:33:55 AM by LJOSETTK
Plot Scale 1:1 10-21-2026 4:38:33 PM by BROCEN SCHEUBER
J:\Projects\2025\2501010637 - Artistic_Rivington\00 250637 CAD\SHTS\05 Civil\Sws\PH1\250637_C-503-D01

J:\Projects\2025\2501010637 - Artistic_Rivington\00 250637 CAD\SHTS\05 Civil\Sws\PH1\250637_C-503-D01.dwg

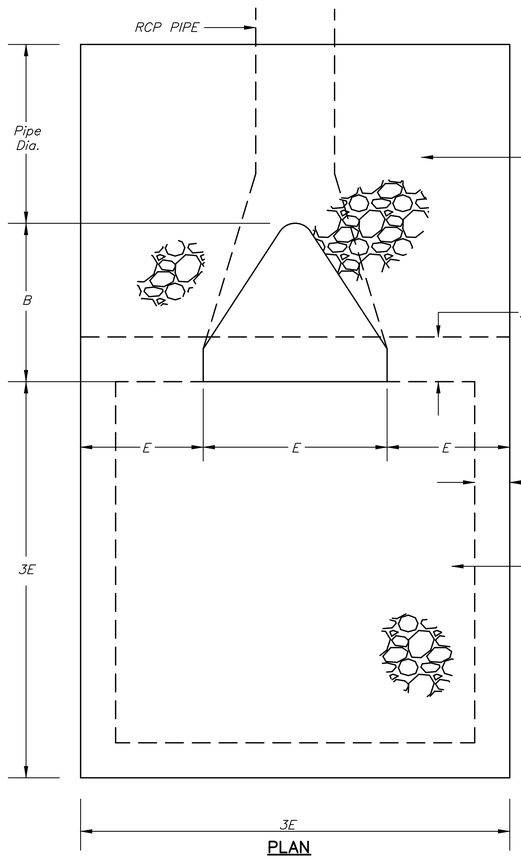


PLAN

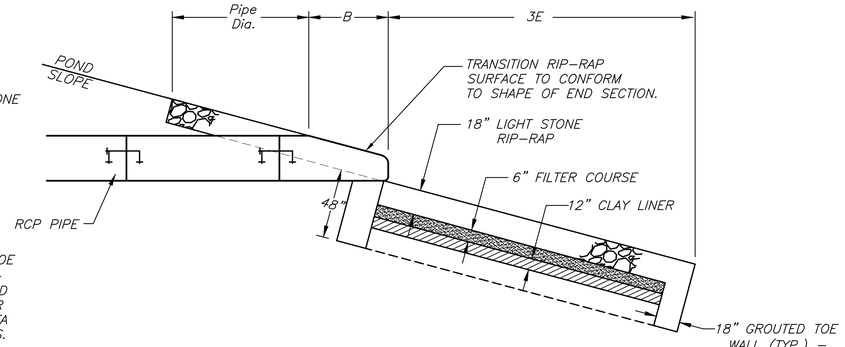


SECTION

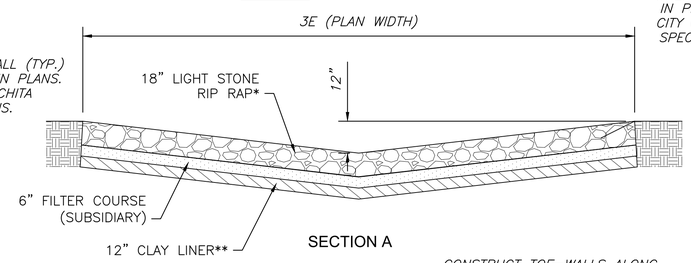


SECTION A

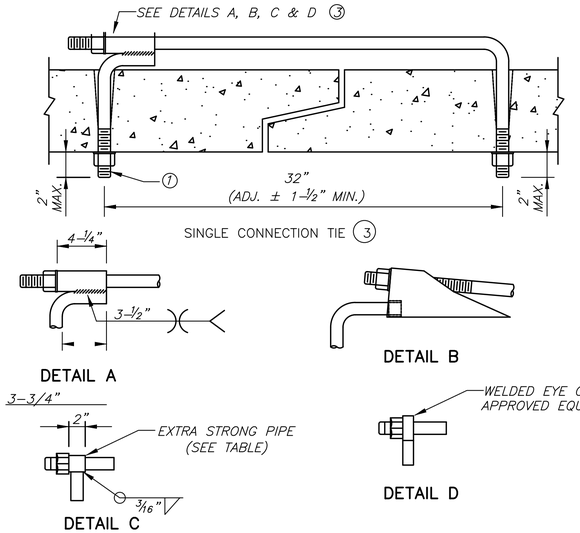


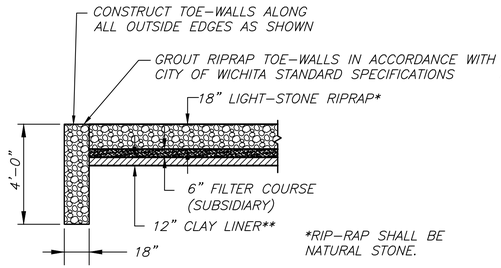


RIPRAP DETAIL

*RIP–RAP SHALL BE NATURAL STONE.

**CLAY LINER (PI=30), MOISTURE CONDITION & COMPACT TO 95% STD. DENSITY

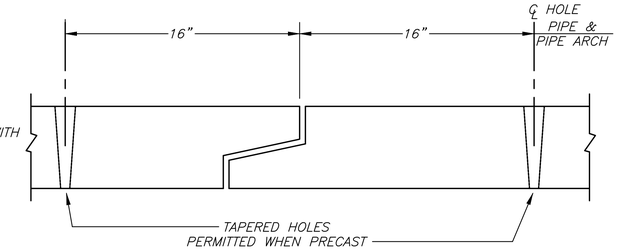


HOLES SHALL BE CAST OR DRILLED 16" FROM CENTERLINE OF JOINTS FOR BOX CULVERTS, AS SHOWN ABOVE, UNLESS FORMS ARE SET UP FOR 16" SPACING FROM OUTSIDE OF JOINT.

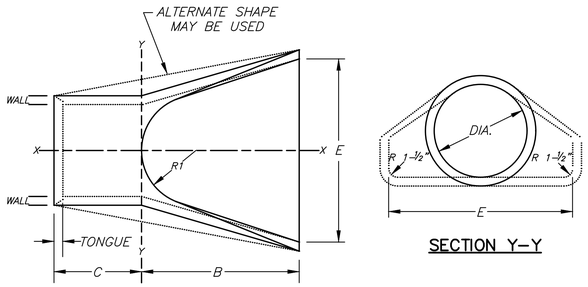


PIPE PLAN




SECTION Y–Y

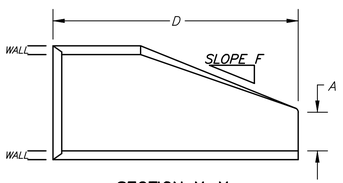


SECTION X–X

## NOTES:

FILTER COURSE, GROUTED TOE WALL AND CLAY LINER SUBSIDIARY TO "RIP RAP, LIGHT STONE".

TIES ARE SUBSIDIARY TO STORM SEWER PIPE.

TIE RODS SHALL BE GALVANIZED OR POWER WASHED AND DIPPED IN AN APPROVED ZINC RICH EPOXY PRIME PAINT AFTER FABRICATION.

RIP–RAP DIMENSIONS AT PIPE INLETS AND OUTLETS MAY BE ADJUSTED TO FIT ACTUAL FIELD CONDITIONS IF APPROVED BY THE ENGINEER.

TIES TO BE USED ONLY TO HOLD PIPE SECTIONS TOGETHER, NOT FOR PULLING SECTIONS TIGHT.

CONNECT END SECTION AND PIPE SECTIONS WITH PIPE TIES A MINIMUM OF 2 JOINTS FROM THE END SECTION.

① TIE ROD THREADS SHALL PROJECT TO THE INSIDE OF PIPE EXCEPT AS NOTED IN PLANS.

② TIE ROD THREADS SHALL BE RECESSED WHEN PIPE IS USED AS CATTLE PASS OR PEDESTRIAN TRAIL.

③ TIES MAY BE COMPLETED WITH U–BOLT TIES, SINGLE CONNECTION TIES (AS SHOWN) OR DOUBLE CONNECTION TIES.

| DIAM. | A | B | C | D | E | F | R1 | TONGUE | WALL |
|---|---|---|---|---|---|---|---|---|---|
| 12" | 4" | 2' 0" | 4' 0–7/8" | 6' 0–7/8" | 2' 0" | 3:1 | 9" | 1–1/2" | 2" |
| 15" | 6" | 2' 3" | 3' 10" | 6' 1" | 2' 6" | 3:1 | 11" | 2" | 2 1/4" |
| 18" | 9" | 2' 3" | 3' 10" | 6' 1" | 3' 0" | 3:1 | 12" | 2–1/2" | 2 1/2" |
| 24" | 9–1/2" | 3' 7–1/2" | 2' 6" | 6' 1–1/2" | 4' 0" | 3:1 | 14" | 2–1/2" | 3" |
| 30" | 1' 0" | 4' 6" | 1' 7–3/4" | 6' 1–3/4" | 5' 0" | 3:1 | 15" | 3" | 3–1/2" |
| 36" | 1' 3" | 5' 3" | 1' 10–3/4" | 8' 1–3/4" | 6' 0" | 3:1 | 20" | 3–1/2" | 4" |
| 42" | 1' 9" | 5' 3" | 2'–11" | 8' 2" | 6' 6" | 3:1 | 22" | 3–3/4" | 4–1/2" |
| 48" | 2' 0" | 6' 0" | 2' 2" | 8' 2" | 7' 0" | 3:1 | 22" | 4–1/4" | 5" |
| 54" | 2' 3" | 5' 5" | 2' 11" | 8' 4" | 7' 6" | 3:1 | 24" | 4–3/4" | 5–1/2" |
| 60" | 2' 6" | 5' 0" | 3' 3" | 8' 3" | 8' 0" | 2.4:1 | 24" | 5" | 6" |
| 66" | 2' 0" | 6' 6" | 1' 9" | 8' 3" | 8' 6" | 2:1 | 24" | 5–1/2" | 7" |
| 72" | 2' 0" | 6' 6" | 1' 9" | 8' 3" | 9' 0" | 2:1 | 24" | 6" | 7–1/2" |

| END AREA SQ.FT. | ROUND EQUIV. | SPAN | RISE | WALL | A | B | C | D | E | R1 | R2 | R3 | R4 |
|---|---|---|---|---|---|---|---|---|---|---|---|---|---|
| 3.3 | 24" | 30" | 19" | 3 1/4" | 8–1/2" | 3' 3" | 2' 9" | 6' 0" | 4' 0" | 8–1/4" | 26–1/4" | 3" | 7" |
| 4.1 | 27" | 34" | 22" | 3 1/2" | 9" | 3' 10" | 2' 2" | 6' 0" | 4' 6" | 9–1/4" | 29–17/32" | 3" | 8" |
| 5.1 | 30" | 38" | 24" | 3 3/4" | 9–1/2" | 4' 6" | 1' 6" | 6' 0" | 5' 0" | 10–1/4" | 32–3/4" | 3" | 9" |
| 6.3 | 33" | 42" | 27" | 3 3/4" | 10–3/8" | 4' 9" | 1' 3" | 6' 0" | 5' 6" | 11–7/16" | 36–3/16" | 3" | 10–1/2" |
| 7.4 | 36" | 45" | 29" | 4 1/2" | 11 1/4" | 5' 0" | 3' 0" | 8' 0" | 6' 0" | 12–1/4" | 39–1/4" | 3" | 12" |

TONGUE LENGTHS BASED ON QUINN STANDARD

| PIPE SIZE (INCHES) | ROD THREAD DIA. |
|---|---|
| 12 – 27 | 5/8" |
| 30 – 66 | 3/4" |
| 72 – 108 | 1" |

| ROD THREAD DIA. | EXTRA STRONG PIPE INSIDE DIA. |
|---|---|
| 5/8" | 3/4" |
| 3/4" | 1" |
| 1" | 1–1/4" |

PIPE SIZE LISTED IS INSIDE DIA. OF ROUND PIPE OR EQUIVALENT DIA. OF PIPE ARCH.

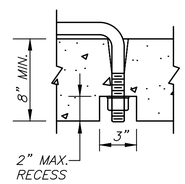


OPTIONAL RECESS DETAIL ②

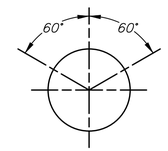


ROUND PIPE

MKEC
Wichita, KS • 316.684.9600

SCOTT PRESTON LICENSED 24423 KANSAS PROFESSIONAL ENGINEER
10/22/26

STORM WATER SEWER #840 PHASE 1

# RIVINGTON ADDITION

WICHITA, KANSAS

END SECTION DETAIL

PROJECT NO. 458-2026-085656

SCALE AS SHOWN

| DRAWN | DESIGNED | CHECKED |
|---|---|---|
| BWS | DFL | SPE |

| NO. | REVISION | DATE |
|---|---|---|
| 0 | ISSUED FOR CONSTRUCTION | 10/23/2026 |

SHEET NO. C-504-D01
13 OF 24

PROPERTY OF MKEC ENGINEERING, INC. (MKEC), AND MAY NOT BE USED OR REPRODUCED IN ANY WAY WITHOUT THE EXPRESS CONSENT OF MKEC.
©2026 MKEC ENGINEERING, INC. ALL RIGHTS RESERVED WWW.MKEC.COM THESE DRAWINGS AND THEIR CONTENTS, INCLUDING, BUT NOT LIMITED TO, ALL CONCEPTS, DESIGNS, & IDEAS ARE THE EXCLUSIVE

PLOTTED: Wednesday, October 21, 2026 @ 04:38PM
J:\PROJECTS\2025\2501019\07 - ARTISTIC_RIVINGTON\N00\250637 CAD\SHTS\05 CIVIL\SWSPH\1250637_C-504-D01.DWG

EVERY ATTEMPT HAS BEEN MADE TO ENSURE ALL COORDINATE VALUES SHOWN ARE AN ACCURATE AND TRUE REPRESENTATION OF THE CURRENT PLANS. ALL VALUES ARE TO BE CONFIRMED WITH THE FINAL SIGNED PLAN SET BEFORE USE.

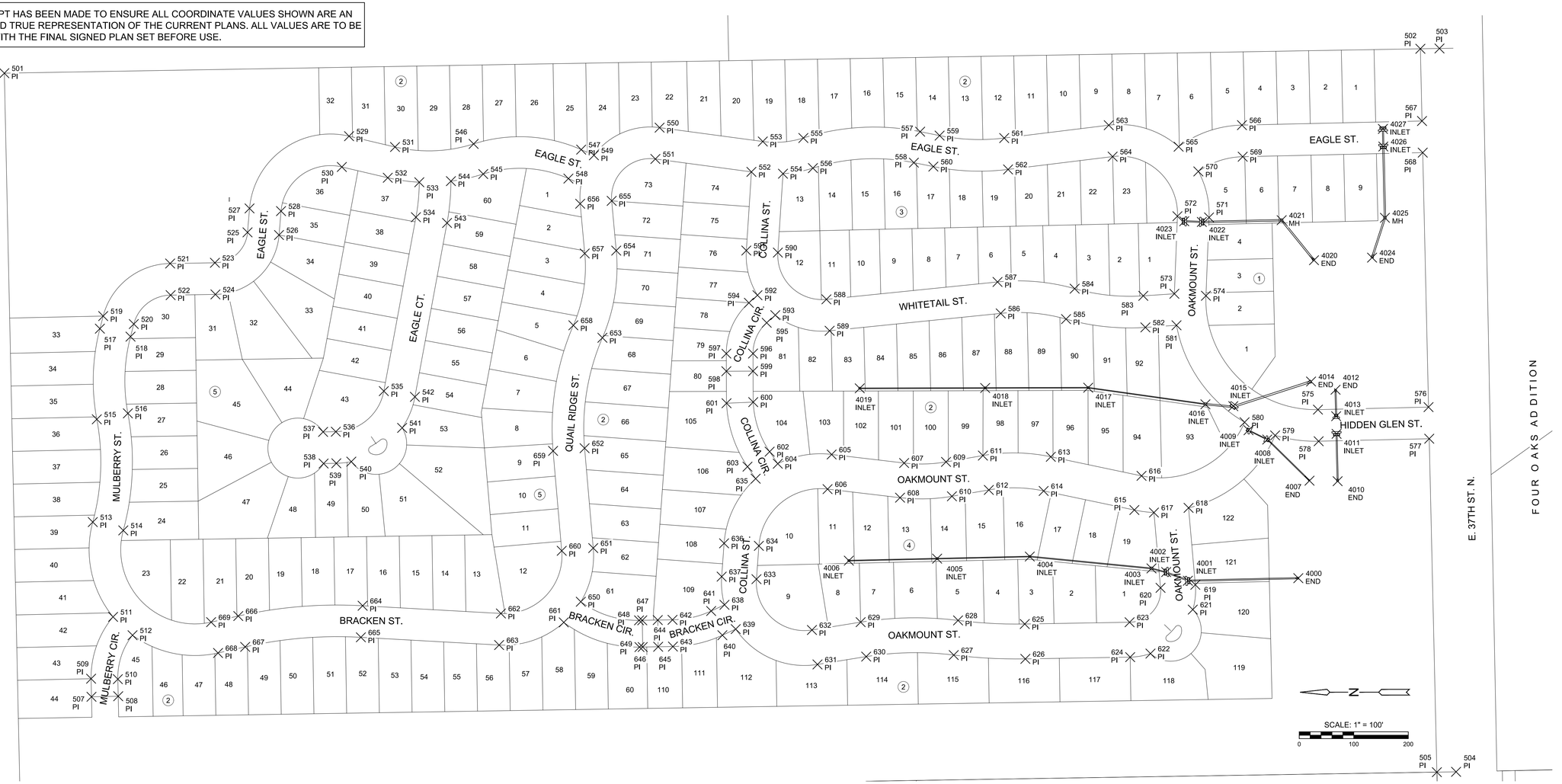


| STORM WATER SEWER POINTS | | | |
|---|---|---|---|
| Point # | Northing | Easting | Desc. |
| 4000 | 1710795.68 | 1689048.76 | END |
| 4001 | 1710998.30 | 1689044.04 | INLET |
| 4002 | 1711038.09 | 1689060.01 | INLET |
| 4003 | 1711065.02 | 1689066.65 | INLET |
| 4004 | 1711288.25 | 1689088.43 | INLET |
| 4005 | 1711458.18 | 1689084.55 | INLET |
| 4006 | 1711620.14 | 1689080.86 | INLET |
| 4007 | 1710775.23 | 1689227.56 | END |
| 4008 | 1710852.73 | 1689303.04 | INLET |
| 4009 | 1710887.06 | 1689320.10 | INLET |
| 4010 | 1710723.61 | 1689226.66 | END |
| 4011 | 1710725.59 | 1689313.53 | INLET |

| STORM WATER SEWER POINTS | | | |
|---|---|---|---|
| Point # | Northing | Easting | Desc. |
| 4012 | 1710727.46 | 1689394.44 | END |
| 4013 | 1710726.33 | 1689345.85 | INLET |
| 4014 | 1710772.37 | 1689409.51 | END |
| 4015 | 1710914.99 | 1689364.30 | INLET |
| 4016 | 1710966.13 | 1689367.68 | INLET |
| 4017 | 1711181.08 | 1689398.15 | INLET |
| 4018 | 1711370.09 | 1689397.65 | INLET |
| 4019 | 1711600.14 | 1689397.03 | INLET |
| 4020 | 1710766.95 | 1689632.01 | END |
| 4021 | 1710826.29 | 1689705.47 | MH |
| 4022 | 1710972.67 | 1689702.23 | INLET |
| 4023 | 1711004.98 | 1689703.52 | INLET |

| STORM WATER SEWER POINTS | | | |
|---|---|---|---|
| Point # | Northing | Easting | Desc. |
| 4024 | 1710660.47 | 1689636.77 | END |
| 4025 | 1710636.84 | 1689709.79 | MH |
| 4026 | 1710639.82 | 1689840.60 | INLET |
| 4027 | 1710640.56 | 1689872.92 | INLET |

MKEC
Wichita, KS • 316.684.9600

SCOTT PRESTON LICENSED PROFESSIONAL ENGINEER 24423 KANSAS
10/22/26

STORM WATER SEWER #840 PHASE 1

# RIVINGTON ADDITION

WICHITA, KANSAS

COORDINATE PLAN

PROJECT NO. 458-2026-085656

SCALE 1"=100'

| DRAWN | DESIGNED | CHECKED |
|---|---|---|
| BWS | DFL | SPE |

| NO. | REVISION | DATE |
|---|---|---|
| 0 | ISSUED FOR CONSTRUCTION | 10/23/2026 |

SHEET NO. C-601-D01
14 OF 24

©2026 MKEC ENGINEERING, INC. ALL RIGHTS RESERVED WWW.MKEC.COM THESE DRAWINGS AND THEIR CONTENTS, INCLUDING, BUT NOT LIMITED TO, ALL CONCEPTS, DESIGNS, & IDEAS ARE THE EXCLUSIVE PROPERTY OF MKEC ENGINEERING, INC. (MKEC), AND MAY NOT BE USED OR REPRODUCED IN ANY WAY WITHOUT THE EXPRESS CONSENT OF MKEC.

PLOTTED: Wednesday, October 21, 2026 @ 04:39PM
J:\PROJECTS\2025\2501010637 - ARTISTIC_RIVINGTON\00 250637 CAD\SHTS\05 CIVIL\SVS\PH1\250637_C-601-D01.DWG

PLOTTED: Wednesday, October 21, 2026 @ 04:38PM

| PLAT POINTS | | | |
|---|---|---|---|
| Point # | Northing | Easting | Desc. |
| 501 | 1713169.03 | 1689975.14 | PI |
| 502 | 1710571.89 | 1690019.88 | PI |
| 503 | 1710536.77 | 1690020.48 | PI |
| 504 | 1710506.40 | 1688693.48 | PI |
| 505 | 1710541.65 | 1688692.86 | PI |
| 506 | 1713140.32 | 1688651.42 | PI |
| 507 | 1713009.18 | 1688831.10 | PI |
| 508 | 1712960.19 | 1688832.16 | PI |
| 509 | 1713009.89 | 1688864.30 | PI |
| 510 | 1712960.87 | 1688863.50 | PI |
| 511 | 1712969.60 | 1688977.75 | PI |
| 512 | 1712933.88 | 1688944.01 | PI |
| 513 | 1713006.82 | 1689151.63 | PI |
| 514 | 1712950.84 | 1689136.43 | PI |
| 515 | 1712999.44 | 1689340.26 | PI |
| 516 | 1712942.45 | 1689351.04 | PI |
| 517 | 1712993.75 | 1689506.49 | PI |
| 518 | 1712937.63 | 1689491.84 | PI |
| 519 | 1712987.71 | 1689529.59 | PI |
| 520 | 1712931.60 | 1689514.94 | PI |
| 521 | 1712864.96 | 1689625.98 | PI |
| 522 | 1712864.03 | 1689567.99 | PI |
| 523 | 1712782.82 | 1689627.29 | PI |

| PLAT POINTS | | | |
|---|---|---|---|
| Point # | Northing | Easting | Desc. |
| 524 | 1712781.90 | 1689569.30 | PI |
| 525 | 1712723.01 | 1689683.15 | PI |
| 526 | 1712665.22 | 1689678.26 | PI |
| 527 | 1712719.30 | 1689727.05 | PI |
| 528 | 1712661.51 | 1689722.16 | PI |
| 529 | 1712536.78 | 1689859.55 | PI |
| 530 | 1712550.03 | 1689803.08 | PI |
| 531 | 1712452.48 | 1689839.76 | PI |
| 532 | 1712465.74 | 1689783.29 | PI |
| 533 | 1712407.95 | 1689775.05 | PI |
| 534 | 1712414.11 | 1689710.94 | PI |
| 535 | 1712473.03 | 1689391.91 | PI |
| 536 | 1712561.06 | 1689317.45 | PI |
| 537 | 1712584.39 | 1689317.08 | PI |
| 538 | 1712583.47 | 1689259.09 | PI |
| 539 | 1712560.13 | 1689259.46 | PI |
| 540 | 1712532.66 | 1689262.46 | PI |
| 541 | 1712439.46 | 1689324.43 | PI |
| 542 | 1712415.99 | 1689381.38 | PI |
| 543 | 1712357.07 | 1689700.41 | PI |
| 544 | 1712349.94 | 1689777.10 | PI |
| 545 | 1712290.66 | 1689790.12 | PI |
| 546 | 1712308.27 | 1689845.38 | PI |

| PLAT POINTS | | | |
|---|---|---|---|
| Point # | Northing | Easting | Desc. |
| 547 | 1712111.08 | 1689834.88 | PI |
| 548 | 1712134.43 | 1689781.78 | PI |
| 549 | 1712087.72 | 1689824.58 | PI |
| 550 | 1711967.23 | 1689875.20 | PI |
| 551 | 1711974.94 | 1689817.72 | PI |
| 552 | 1711798.80 | 1689794.08 | PI |
| 553 | 1711777.90 | 1689849.79 | PI |
| 554 | 1711740.90 | 1689790.72 | PI |
| 555 | 1711703.53 | 1689856.25 | PI |
| 556 | 1711686.02 | 1689800.95 | PI |
| 557 | 1711489.38 | 1689867.83 | PI |
| 558 | 1711500.82 | 1689810.97 | PI |
| 559 | 1711453.66 | 1689860.64 | PI |
| 560 | 1711465.10 | 1689803.78 | PI |
| 561 | 1711335.17 | 1689856.12 | PI |
| 562 | 1711328.09 | 1689798.55 | PI |
| 563 | 1711143.39 | 1689879.70 | PI |
| 564 | 1711136.31 | 1689822.14 | PI |
| 565 | 1711015.27 | 1689840.26 | PI |
| 566 | 1710899.07 | 1689879.86 | PI |
| 567 | 1710568.87 | 1689887.39 | PI |
| 568 | 1710567.55 | 1689829.40 | PI |
| 569 | 1710897.74 | 1689821.87 | PI |

| PLAT POINTS | | | |
|---|---|---|---|
| Point # | Northing | Easting | Desc. |
| 570 | 1710979.07 | 1689794.87 | PI |
| 571 | 1710959.50 | 1689710.47 | PI |
| 572 | 1711017.45 | 1689712.75 | PI |
| 573 | 1711023.06 | 1689570.50 | PI |
| 574 | 1710965.16 | 1689566.80 | PI |
| 575 | 1710759.74 | 1689357.93 | PI |
| 576 | 1710556.91 | 1689362.55 | PI |
| 577 | 1710555.59 | 1689304.57 | PI |
| 578 | 1710758.42 | 1689299.94 | PI |
| 579 | 1710838.28 | 1689310.66 | PI |
| 580 | 1710894.28 | 1689334.84 | PI |
| 581 | 1711019.16 | 1689512.63 | PI |
| 582 | 1711076.19 | 1689508.78 | PI |
| 583 | 1711080.09 | 1689566.65 | PI |
| 584 | 1711205.98 | 1689579.81 | PI |
| 585 | 1711221.75 | 1689523.99 | PI |
| 586 | 1711341.55 | 1689534.46 | PI |
| 587 | 1711347.41 | 1689592.16 | PI |
| 588 | 1711661.25 | 1689560.26 | PI |
| 589 | 1711655.38 | 1689502.56 | PI |
| 590 | 1711750.27 | 1689646.08 | PI |
| 591 | 1711808.15 | 1689649.83 | PI |
| 592 | 1711787.72 | 1689567.83 | PI |

| PLAT POINTS | | | |
|---|---|---|---|
| Point # | Northing | Easting | Desc. |
| 593 | 1711755.04 | 1689531.33 | PI |
| 594 | 1711803.41 | 1689553.78 | PI |
| 595 | 1711770.73 | 1689517.28 | PI |
| 596 | 1711795.87 | 1689460.82 | PI |
| 597 | 1711844.87 | 1689460.69 | PI |
| 598 | 1711844.78 | 1689428.41 | PI |
| 599 | 1711795.78 | 1689428.54 | PI |
| 600 | 1711795.49 | 1689371.73 | PI |
| 601 | 1711844.44 | 1689369.63 | PI |
| 602 | 1711765.42 | 1689280.80 | PI |
| 603 | 1711805.98 | 1689253.30 | PI |
| 604 | 1711750.47 | 1689258.73 | PI |
| 605 | 1711651.66 | 1689275.67 | PI |
| 606 | 1711659.16 | 1689212.11 | PI |
| 607 | 1711518.70 | 1689259.99 | PI |
| 608 | 1711526.20 | 1689196.43 | PI |
| 609 | 1711441.89 | 1689262.02 | PI |
| 610 | 1711431.04 | 1689198.95 | PI |
| 611 | 1711374.18 | 1689273.67 | PI |
| 612 | 1711363.34 | 1689210.59 | PI |
| 613 | 1711249.66 | 1689271.38 | PI |
| 614 | 1711262.81 | 1689208.75 | PI |
| 615 | 1711096.47 | 1689173.80 | PI |

| PLAT POINTS | | | |
|---|---|---|---|
| Point # | Northing | Easting | Desc. |
| 616 | 1711083.31 | 1689236.43 | PI |
| 617 | 1711060.55 | 1689169.14 | PI |
| 618 | 1710997.06 | 1689177.76 | PI |
| 619 | 1710984.67 | 1689036.58 | PI |
| 620 | 1711048.43 | 1689030.98 | PI |
| 621 | 1710989.28 | 1688991.07 | PI |
| 622 | 1711066.85 | 1688910.43 | PI |
| 623 | 1711105.22 | 1688967.92 | PI |
| 624 | 1711104.13 | 1688903.93 | PI |
| 625 | 1711297.47 | 1688964.65 | PI |
| 626 | 1711296.38 | 1688900.66 | PI |
| 627 | 1711427.70 | 1688907.71 | PI |
| 628 | 1711419.77 | 1688971.21 | PI |
| 629 | 1711598.47 | 1688968.06 | PI |
| 630 | 1711588.31 | 1688904.87 | PI |
| 631 | 1711677.61 | 1688890.51 | PI |
| 632 | 1711687.78 | 1688953.69 | PI |
| 633 | 1711789.53 | 1689046.94 | PI |
| 634 | 1711785.09 | 1689108.06 | PI |
| 635 | 1711791.03 | 1689231.24 | PI |
| 636 | 1711848.93 | 1689112.69 | PI |
| 637 | 1711853.36 | 1689051.57 | PI |
| 638 | 1711848.19 | 1688999.83 | PI |

| PLAT POINTS | | | |
|---|---|---|---|
| Point # | Northing | Easting | Desc. |
| 639 | 1711827.62 | 1688955.36 | PI |
| 640 | 1711852.07 | 1688944.05 | PI |
| 641 | 1711872.64 | 1688988.53 | PI |
| 642 | 1711943.52 | 1688972.33 | PI |
| 643 | 1711942.74 | 1688923.34 | PI |
| 644 | 1711970.61 | 1688971.90 | PI |
| 645 | 1711969.83 | 1688922.91 | PI |
| 646 | 1711998.21 | 1688922.45 | PI |
| 647 | 1711998.99 | 1688971.45 | PI |
| 648 | 1712004.91 | 1688971.35 | PI |
| 649 | 1712004.13 | 1688922.36 | PI |
| 650 | 1712111.71 | 1689005.46 | PI |
| 651 | 1712088.96 | 1689103.95 | PI |
| 652 | 1712104.80 | 1689287.18 | PI |
| 653 | 1712072.13 | 1689489.73 | PI |
| 654 | 1712046.75 | 1689649.66 | PI |
| 655 | 1712055.09 | 1689740.88 | PI |
| 656 | 1712112.85 | 1689735.60 | PI |
| 657 | 1712104.50 | 1689644.38 | PI |
| 658 | 1712125.41 | 1689512.64 | PI |
| 659 | 1712162.58 | 1689282.19 | PI |
| 660 | 1712146.74 | 1689098.95 | PI |
| 661 | 1712142.95 | 1688967.64 | PI |

| PLAT POINTS | | | |
|---|---|---|---|
| Point # | Northing | Easting | Desc. |
| 662 | 1712258.27 | 1688983.99 | PI |
| 663 | 1712261.51 | 1688926.08 | PI |
| 664 | 1712511.85 | 1688998.17 | PI |
| 665 | 1712515.09 | 1688940.27 | PI |
| 666 | 1712739.98 | 1688979.28 | PI |
| 667 | 1712727.26 | 1688922.70 | PI |
| 668 | 1712777.05 | 1688911.50 | PI |
| 669 | 1712789.77 | 1688968.09 | PI |

EVERY ATTEMPT HAS BEEN MADE TO ENSURE ALL COORDINATE VALUES SHOWN ARE AN ACCURATE AND TRUE REPRESENTATION OF THE CURRENT PLANS. ALL VALUES ARE TO BE CONFIRMED WITH THE FINAL SIGNED PLAN SET BEFORE USE.

MKEC
Wichita, KS • 316.684.9600

SCOTT PRESTON LICENSED ENGINEER 24423 KANSAS PROFESSIONAL ENGINEER
10/22/26

STORM WATER SEWER #840 PHASE 1

# RIVINGTON ADDITION

WICHITA, KANSAS

PLAT POINT TABLE

PROJECT NO. 458-2026-085656

SCALE AS SHOWN

| DRAWN | DESIGNED | CHECKED |
|---|---|---|
| BWS | DFL | SPE |

| NO. | REVISION | DATE |
|---|---|---|
| 0 | ISSUED FOR CONSTRUCTION | 10/23/2026 |

SHEET NO.
C-602-D01
15 OF 24

©2026 MKEC ENGINEERING, INC. ALL RIGHTS RESERVED WWW.MKEC.COM. THESE DRAWINGS AND THEIR CONTENTS, INCLUDING, BUT NOT LIMITED TO, ALL CONCEPTS, DESIGNS, & IDEAS ARE THE EXCLUSIVE PROPERTY OF MKEC ENGINEERING, INC. (MKEC), AND MAY NOT BE USED OR REPRODUCED IN ANY WAY WITHOUT THE EXPRESS CONSENT OF MKEC.

J:\PROJECTS\2025\2501010637 - ARTBETIC_RIVINGTON\00.250637 CAD\SHTS\05 CIVIL\SWS\PH1\250637_C-601-D01.DWG

PLOTTED: Wednesday, October 21, 2026 @ 04:38PM

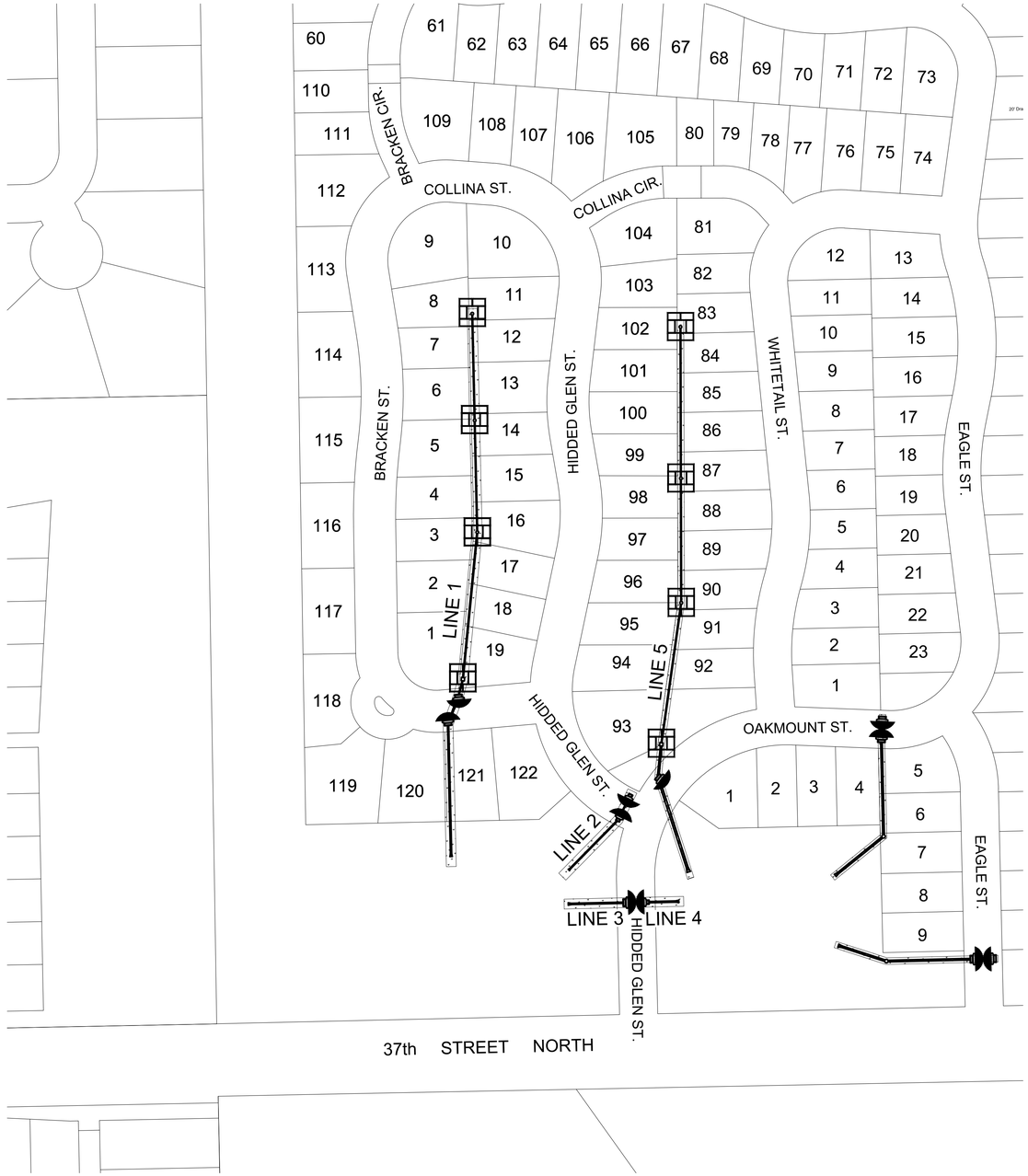


# EROSION CONTROL/SEEDING NOTES

1. EROSION CONTROL IS TO MEET ALL FEDERAL, STATE, COUNTY AND LOCAL CODE STANDARDS.
2. TEMPORARY SEEDING: ALL AREAS DISTURBED WITH EXCEPTION OF PROPOSED STREET PAVEMENT AND AREAS PROPOSED AS NATIVE SEEDING (SEE SEEDING PLAN) SHALL BE SEEDED AND FERTILIZED AS FOLLOWS:
   - ANNUAL RYEGRASS @ 150 LBS./ACRE
   - SLOW RELEASE FERTILIZER @ 150 LBS./ACRE
3. IN THE EVENT THAT A PORTION OF THE SITE WILL REMAIN DISTURBED FOR MORE THAN 14 DAYS, PERMANENT SEEDING SHALL BE INSTALLED.
4. ALL AREAS SHALL BE FINE GRADED AND SURFACE SHALL BE FREE FROM STICKS, SMALL STONES, AND OTHER EXTRANEOUS MATERIALS.
5. CONTRACTOR SHALL PROVIDE EROSION PROTECTION THROUGHOUT PROJECT CONSTRUCTION. THE PLAN PROVIDED HERE IS FOR FINAL PROTECTION, VARIOUS PHASES OF THIS PLAN SHALL BE IMPLEMENTED OR MODIFIED TO CONTROL EROSION. MODIFICATIONS OF THE PLAN SHALL BE APPROVED BY THE OWNER'S REPRESENTATIVE.
6. SEEDING AREAS SHALL BE PREPARED FOR PLANTING WITH COMMON AGRICULTURAL TECHNIQUES. APPROVE WITH OWNER'S REPRESENTATIVE BEFORE PLANTING.
7. ALL SEED SHALL BE DISTRIBUTED WITH AN ACCEPTABLE DRILL INTENDED FOR SUCH OPERATIONS, OR OTHER EQUIPMENT APPROVED BY THE OWNER'S REPRESENTATIVE. SEEDING DEPTH SHALL BE 1/4 OF AN INCH.
8. ALL SEEDED AREAS SHALL BE IMMEDIATELY MULCHED WITH PRAIRIE HAY AT 2 TONS/ACRE. ANCHOR MULCH BY CRIMPING INTO TOPSOIL WITH SUITABLE MECHANICAL EQUIPMENT.
9. CONTRACTOR IS RESPONSIBLE FOR MAINTAINING AND IMPLEMENTING ALL EROSION CONTROL.
10. TURF REINFORCEMENT MAT SHALL BE PLACED OVER PERMANENT SEEDING MIXES PER THE MANUFACTURER'S RECOMMENDATIONS WHERE INDICATED.
11. IN ORDER TO PREVENT SILT OR SEDIMENT FROM ENTERING ADJACENT PROPERTIES, APPROPRIATE BMP'S SHALL BE IMPLEMENTED WITHIN THE PROJECT.
12. ANY MUD TRACKED ONTO ADJACENT PAVED AREAS OR STREETS SHALL BE REMOVED AT THE END OF EACH WORK DAY.
13. PER THE REQUIREMENTS OF THE NOI/SWPPP, BMP INSPECTION REPORTS SHALL BE COMPLETED BY THE CONTRACTOR WEEKLY AND WITHIN 24 HOURS AFTER A 1/2" RAIN. REPORTS SHALL BE KEPT WITH THE SWPPP ON SITE.
14. CONTRACTOR SHALL PROVIDE A SIGN NEAR THE ENTRANCE WITH THE FOLLOWING INFORMATION:

    A. CONTACT NAME AND INFORMATION
    B. A COPY OF THE NOI
    C. LOCATION OF SWPPP

## LEGEND

- ANNUAL RYEGRASS (APPROX. 0.72 ACRES)
- AREA INLET PROTECTION (8)
- CURB INLET PROTECTION (11)

N

SCALE: 1" = 100'
0 100 200

MKEC
Wichita, KS • 316.684.9600

SCOTT PRESTON LICENSED LANDSCAPE ARCHITECT 24423 KANSAS PROFESSIONAL ENGINEER
10/22/26

STORM WATER SEWER #840 PHASE 1

**RIVINGTON ADDITION**

WICHITA, KANSAS

EROSION CONTROL PLAN

PROJECT NO. 458-2026-085656

SCALE 1"=100'

| DRAWN | DESIGNED | CHECKED |
|---|---|---|
| BWS | DFL | SPE |

| NO. | REVISION | DATE |
|---|---|---|
| 0 | ISSUED FOR CONSTRUCTION | 10/23/2026 |

SHEET NO. C-701-D01
16 OF 24

©2026 MKEC ENGINEERING, INC. ALL RIGHTS RESERVED WWW.MKEC.COM THESE DRAWINGS AND THEIR CONTENTS, INCLUDING, BUT NOT LIMITED TO, ALL CONCEPTS, DESIGNS, & IDEAS ARE THE EXCLUSIVE PROPERTY OF MKEC ENGINEERING, INC. (MKEC), AND MAY NOT BE USED OR REPRODUCED IN ANY WAY WITHOUT THE EXPRESS CONSENT OF MKEC.

J:\PROJECTS\2020\2501010637 - ARTISTIC_RIVINGTON\00\2506637 CAD\SHTS\05 CIVIL\SWS\PH1\2506637_C-701-D01.DWG

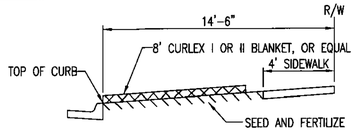


SECTION B-B

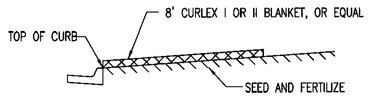


SECTION A-A

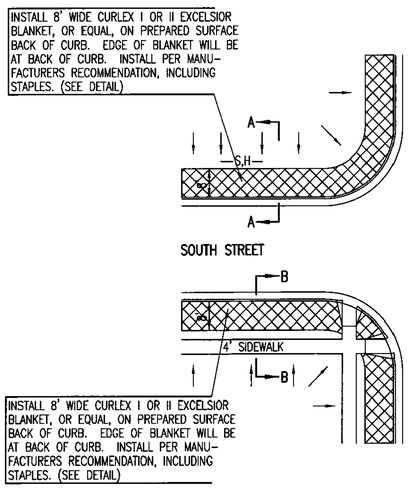


GENERAL NOTES

1. EXCELSIOR MAT TO BE INSTALLED WHEN SOD IS NOT SPECIFIED ON PROJECT.
2. EXCELSIOR BLANKET TO BE INSTALLED OVER SEED AND FERTILIZER, AS SPECIFIED IN THE PROJECT SPECIFICATIONS.
3. AFTER INSTALLATION OF EXCELSIOR BLANKET, AT LOCATIONS WHERE CONCENTRATED FLOW CARRIES SEDIMENT OVER THE CURB AND INTO THE GUTTER, SUPPLEMENTAL EROSION CONTROL DEVICES WILL BE INSTALLED BY THE CONTRACTOR AS NEEDED, TO FIX THE PROBLEM.

## BACK OF CURB PROTECTION DETAIL

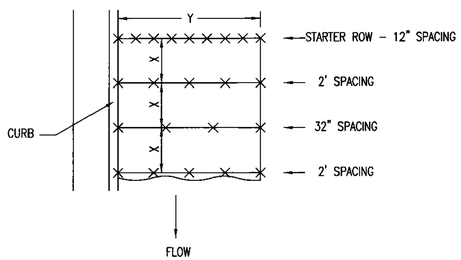


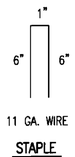


STAPLE

STAPLE PATTERN

NOTES: USE 6" SEAM OVERLAP
(X & Y = RECOMMENDED BY MANUFACTURE)

## DETAILS FOR APPROVED EROSION CONTROL MAT

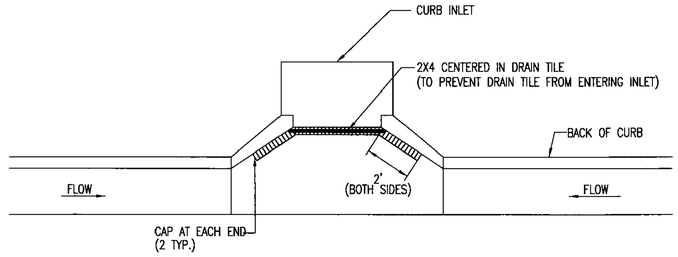


NOTE:
PLACE 4" PERFORATED PVC PIPE, FILLED WITH 1/2"-1" DIA. GRAVEL, IN FRONT OF CURB INLET AS SHOWN.

| 2X4 LENGTH | INLET TYPE | INLET OPENING |
|---|---|---|
| 5'-6" | 1-A | 5'-0" |
| 10'-6" | 1-A | 10'-0" |
| 15'-6" | 1-A | 15'-0" |

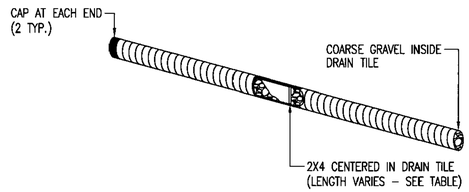


## CURB INLET PROTECTION

4" PERFORATED PIPE W/ GRAVEL

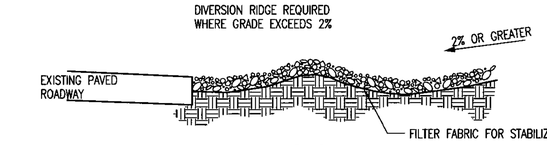


SECTION C-C

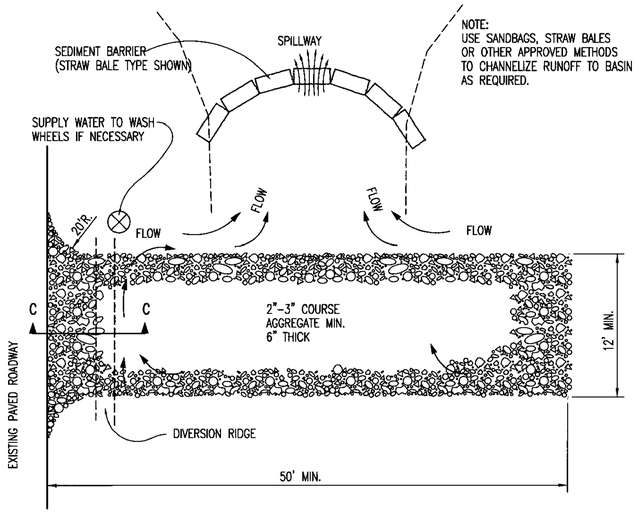


## STABILIZED CONSTRUCTION ENTRANCE

GENERAL NOTES

1. THE ENTRANCE SHALL BE MAINTAINED IN A CONDITION THAT WILL PREVENT TRACKING OR FLOWING OF SEDIMENT ONTO PUBLIC RIGHTS-OF-WAY. THIS MAY REQUIRE TOP DRESSING, REPAIR AND/OR CLEANOUT OF ANY MEASURES USED TO TRAP SEDIMENT.
2. WHEN NECESSARY, WHEELS SHALL BE CLEANED PRIOR TO ENTRANCE ONTO PUBLIC RIGHT-OF-WAY.
3. WHEN WASHING IS REQUIRED, IT SHALL BE DONE ON AN AREA STABILIZED WITH CRUSHED STONE THAT DRAINS INTO AN APPROVED SEDIMENT TRAP OR SEDIMENT BASIN, AS SHOWN ABOVE.
4. DRIVE ENTRANCES ONTO RESIDENTIAL LOTS WILL NOT BE REQUIRED TO HAVE THE SEDIMENT BARRIER SHOWN, BUT WHEEL WASHING MAY BE REQUIRED IF STABILIZED ENTRANCE IS NOT SUFFICIENT TO KEEP MUD FROM BEING TRACKED ONTO ADJACENT STREET. ENTRANCE SHALL EXTEND FROM BACK OF CURB TO DWELLING.

REVISION DATE: MAY 2013

GARY L. JANZEN LICENSED 15294 KANSAS PROFESSIONAL ENGINEER
05/31/13

CITY OF WICHITA
PUBLIC WORKS & UTILITIES
ENGINEERING DIVISION

BACK OF CURB PROTECTION, CURB INLET PROTECTION AND CONSTRUCTION ENTRANCE

CITY ENGINEER
GARY JANZEN, P.E.

| PROJECT NUMBER | OCA NUMBER | DATE |
|---|---|---|
| 458-2026-085656 | | ##-##-## |

CITY ENGINEER'S OFFICE
CITY HALL - SEVENTH FLOOR
455 NORTH MAIN STREET
WICHITA, KANSAS 67202-1620
(316) 268-4501

SHEET
C-751-D01
17 OF 24

SW-501

NOTE: POINT A MUST BE HIGHER THAN POINT B SO THAT WATER FLOWS OVER THE SILT FENCE FABRIC AND NOT AROUND IT.

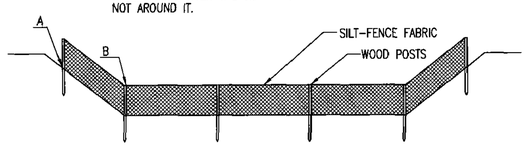


ELEVATION

## SILT FENCE DITCH CHECKS
(STREAM PROTECTION)

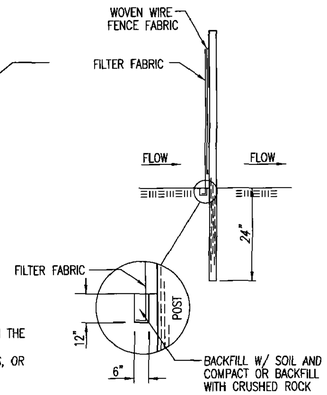


ANCHOR TRENCH DETAIL

MATERIAL SPECIFICATION:

SILT FENCE FABRIC SHOULD CONFORM TO THE AASHTO M288 96 SILT FENCE SPECIFICATION.
THE POSTS USED TO SUPPORT THE SILT FENCE FABRIC SHOULD BE A HARDWOOD MATERIAL WITH THE FOLLOWING MINIMUM DIMENSIONS: 2" SQUARE (NOMINAL) BY 4' LONG.
SILT FENCE FABRIC SHOULD BE ATTACHED TO THE WOODEN POSTS WITH STAPLES, WIRE, ZIP TIES, OR NAILS.

PLACEMENT:

PLACE SILT FENCE IN DITCHES WHERE IT IS UNLIKELY THAT IT WILL BE OVERTOPPED.
WATER SHOULD FLOW THROUGH A SILT FENCE DITCH CHECK, NOT OVER IT. SILT FENCE DITCH CHECKS OFTEN FAIL WHEN OVERTOPPED.
SILT FENCE DITCH CHECKS SHOULD BE PLACED PERPENDICULAR TO THE FLOWLINE OF THE DITCH.
THE SILT FENCE SHOULD EXTEND FAR ENOUGH SO THAT THE GROUND LEVEL AT THE ENDS OF THE FENCE IS HIGHER THAN THE TOP OF THE LOW POINT OF THE FENCE. THIS PREVENTS WATER FROM FLOWING AROUND THE CHECK.
SILT FENCE DITCH CHECKS SHOULD NOT BE PLACED IN DITCHES WHERE HIGH FLOWS ARE EXPECTED. ROCK CHECKS SHOULD BE USED INSTEAD.
SILT FENCE SHOULD BE PLACED IN DITCHES WITH SLOPES OF 6% OR LESS. FOR SLOPES STEEPER THAN 6%, ROCK CHECKS SHOULD BE USED.

THE FOLLOWING TABLE PROVIDES CHECK SPACING FOR A GIVEN DITCH GRADE:

| DITCH GRADE (%) | CHECK SPACING (FEET) |
|---|---|
| 0.5 | 200 |
| 1.0 | 200 |
| 2.0 | 100 |
| 3.0 | 65 |
| 4.0 | 50 |
| 5.0 | 40 |
| 6.0 | 30 |

PROPER INSTALLATION METHOD:

EXCAVATE A TRENCH PERPENDICULAR TO THE DITCH FLOWLINE THAT IS AT LEAST 12" DEEP BY 6" WIDE.
EXTEND THE TRENCH IN A STRAIGHT LINE ALONG THE ENTIRE LENGTH OF THE PROPOSED DITCH CHECK.
PLACE THE SOIL ON THE UPSTREAM SIDE OF THE TRENCH FOR LATER USE.
ROLL OUT A CONTINUOUS LENGTH OF SILT FENCE FABRIC ON THE DOWNSTREAM SIDE OF THE TRENCH.
PLACE THE EDGE OF THE FABRIC IN THE TRENCH STARTING AT THE TOP UPSTREAM EDGE OF THE TRENCH.
LINE TWO SIDES OF THE TRENCH WITH THE FABRIC AS SHOWN ON DETAIL. BACKFILL OVER THE FABRIC IN THE TRENCH WITH THE EXCAVATED SOIL AND COMPACT. AFTER FILLING THE TRENCH, APPROXIMATELY 24" TO 36" OF SILT FENCE FABRIC SHOULD REMAIN EXPOSED.
LAY THE EXPOSED SILT FENCE ON THE UPSTREAM SIDE OF THE TRENCH TO CLEAR AN AREA FOR DRIVING IN THE POSTS. JUST DOWNSTREAM OF THE TRENCH, DRIVE POSTS INTO THE GROUND TO A DEPTH OF AT LEAST 24". PLACE POSTS NO MORE THAN 4' APART.
ATTACH THE SILT FENCE TO THE ANCHORED POST WITH STAPLES, WIRE, ZIP TIES, OR NAILS.

LIST OF COMMON PLACEMENT/INSTALLATION MISTAKES TO AVOID:

WATER SHOULD FLOW THROUGH A SILT FENCE DITCH CHECK–NOT OVER IT. PLACE SILT FENCE IN DITCHES WHERE IT IS UNLIKELY THAT IT WILL BE OVERTOPPED. SILT FENCE INSTALLATIONS QUICKLY DETERIORATE WHEN WATER OVERTOPS THEM.
DO NOT PLACE SILT FENCE POSTS ON THE UPSTREAM SIDE OF THE SILT FENCE FABRIC. IN THIS CONFIGURATION, THE FORCE OF THE WATER IS NOT RESTRICTED BY THE POSTS, BUT ONLY BY THE STAPLES (WIRE, ZIP TIES, NAILS, ETC.). THE SILT FENCE WILL RIP AND FAIL.
DO NOT PLACE A SILT FENCE DITCH CHECK DIRECTLY IN FRONT OF A CULVERT OUTLET. IT WILL NOT STAND UP TO THE CONCENTRATED FLOW.
DO NOT PLACE SILT FENCE DITCH CHECKS IN DITCHES THAT WILL LIKELY EXPERIENCE HIGH FLOWS. THEY WILL NOT STAND UP TO CONCENTRATED FLOW.
FOLLOW PRESCRIBED DITCH CHECK SPACING GUIDELINES. IF SPACING GUIDELINES ARE EXCEEDED, EROSION WILL OCCUR BETWEEN THE DITCH CHECKS.
DO NOT ALLOW WATER TO FLOW AROUND THE DITCH CHECK. MAKE SURE THAT THE DITCH CHECK IS LONG ENOUGH SO THAT THE GROUND LEVEL AT THE ENDS OF THE FENCE IS HIGHER THAN THE LOW POINT ON THE TOP OF THE FENCE.
DO NOT PLACE SILT FENCE DITCH CHECKS IN CHANNELS WITH SHALLOW SOILS UNDERLAIN BY ROCK. IF THE CHECK IS NOT ANCHORED SUFFICIENTLY, IT WILL WASH OUT.

INSPECTION AND MAINTENANCE:

SILT FENCE DITCH CHECKS SHOULD BE INSPECTED EVERY 7 DAYS AND WITHIN 24 HOURS OF A RAINFALL OF 1/2" OR MORE. THE FOLLOWING IS A LIST OF QUESTIONS THAT SHOULD BE ADDRESSED DURING EACH INSPECTION:

DOES WATER FLOW AROUND THE DITCH CHECK?
DOES WATER FLOW UNDER THE DITCH CHECK?
DOES THE SILT FENCE SAG EXCESSIVELY?
HAS THE SILT FENCE TORN OR BECOME DETACHED FROM THE POSTS?
DOES SEDIMENT NEED TO BE REMOVED FROM BEHIND THE DITCH CHECK?

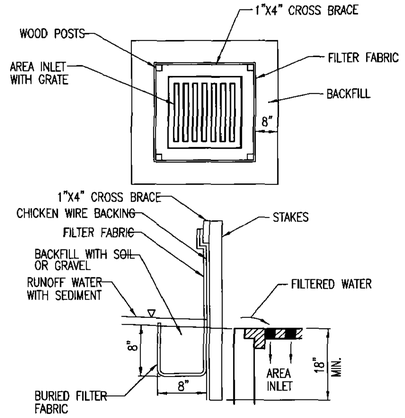


## SILT FENCE BARRIERS FOR AREA INLETS
(INLET PROTECTION)

MATERIAL SPECIFICATION:

SILT FENCE FABRIC SHOULD CONFORM TO THE AASHTO M288 96 SILT FENCE SPECIFICATION.
THE WIRE OR POLYMERIC MESH BACKING USED TO HELP SUPPORT THE SILT FENCE FABRIC SHOULD CONFORM TO THE AASHTO M288 96 SILT FENCE SPECIFICATION.
THE POSTS USED TO SUPPORT THE SILT FENCE FABRIC SHOULD BE A HARDWOOD MATERIAL WITH THE FOLLOWING MINIMUM DIMENSIONS: 2" SQUARE (NOMINAL) BY 4' LONG.
THE MATERIAL USED TO FRAME THE TOPS OF THE POSTS SHOULD BE 1" BY 4" BOARDS.
SILT FENCE FABRIC AND SUPPORT BACKING SHOULD BE ATTACHED TO THE WOODEN POSTS AND FRAME WITH STAPLES, WIRE, ZIP TIES, OR NAILS.

PLACEMENT:

PLACE A SILT FENCE DROP INLET BARRIER IN A LOCATION WHERE IT IS UNLIKELY TO BE OVERTOPPED.
WATER SHOULD FLOW THROUGH SILT FENCE, NOT OVER IT. SILT FENCE BARRIERS FOR AREA INLETS OFTEN FAIL WHEN REPEATEDLY OVERTOPPED.
WHEN USED AS A BARRIER FOR AREA INLETS, SILT FENCE FABRIC AND POSTS MUST BE SUPPORTED AT THE TOP BY A WOODEN FRAME.
WHEN A SILT FENCE BARRIER FOR AREA INLETS IS LOCATED NEAR AN INLET THAT HAS STEEP APPROACH SLOPES, THE STORAGE CAPACITY BEHIND THE BARRIER IS DRASTICALLY REDUCED. TIMELY REMOVAL OF SEDIMENT MUST OCCUR FOR A BARRIER TO OPERATE PROPERLY IN THIS LOCATION.

PROPER INSTALLATION METHOD:

EXCAVATE A TRENCH AROUND THE PERIMETER OF THE AREA INLET THAT IS AT LEAST 8" DEEP BY 8" WIDE.
DRIVE POSTS TO A DEPTH OF AT LEAST 18" AROUND THE PERIMETER OF THE AREA INLET.
THE DISTANCE BETWEEN POSTS SHOULD BE 4' OR LESS. IF THE DISTANCE BETWEEN TWO ADJACENT CORNER POSTS IS MORE THAN 4', ADD ANOTHER POST(S) BETWEEN THEM.
CONNECT THE TOPS OF ALL THE POSTS WITH A WOODEN FRAME MADE OF 1" BY 4" BOARDS. USE NAILS OR SCREWS FOR FASTENING.
ATTACH THE WIRE OR POLYMERIC–MESH BACKING TO THE OUTSIDE OF THE POST/FRAME STRUCTURE WITH STAPLES, WIRE, ZIP TIES, OR NAILS.
ROLL OUT A CONTINUOUS LENGTH OF SILT FENCE FABRIC LONG ENOUGH TO WRAP AROUND THE PERIMETER OF THE AREA INLET. ADD MORE LENGTH FOR OVERLAPPING THE FABRIC JOINT. PLACE THE EDGE OF THE FABRIC IN THE TRENCH, STARTING AT THE OUTSIDE EDGE OF THE TRENCH. LINE ALL THREE SIDES OF THE TRENCH WITH THE FABRIC. BACKFILL OVER THE FABRIC IN THE TRENCH WITH THE EXCAVATED SOIL AND COMPACT. AFTER FILLING THE TRENCH, APPROXIMATELY 24" TO 36" OF SILT FENCE FABRIC SHOULD REMAIN EXPOSED.
ATTACH THE SILT FENCE TO THE OUTSIDE OF THE POST/FRAME STRUCTURE WITH STAPLES, WIRE, ZIP TIES, OR NAILS. THE JOINT SHOULD BE OVERLAPPED TO THE NEXT POST.

NOTE: WHEN A SILT FENCE BARRIER FOR AREA INLET IS PLACED IN A SHALLOW MEDIAN DITCH, MAKE SURE THAT THE TOP OF THE BARRIER IS NOT HIGHER THAN THE PAVED ROAD. IN THIS CONFIGURATION, WATER MAY SPREAD ONTO THE ROADWAY CAUSING A HAZARDOUS CONDITION.

LIST OF COMMON PLACEMENT/INSTALLATION MISTAKES TO AVOID:

WATER SHOULD FLOW THROUGH A SILT FENCE BARRIER FOR AREA INLET–NOT OVER IT. PLACE A SILT FENCE BARRIER FOR AREA INLET IN A LOCATION WHERE IT IS UNLIKELY TO BE OVERTOPPED. SILT FENCE BARRIER FOR AREA INLETS OFTEN FAIL WHEN REPEATEDLY OVERTOPPED.
DO NOT PLACE POSTS ON THE OUTSIDE OF THE SILT FENCE BARRIER FOR AREA INLET. IN THIS CONFIGURATION, THE FORCE OF THE WATER IS NOT RESISTED BY THE POSTS, BUT ONLY BY THE STAPLES (WIRE, ZIP TIES, NAILS, ETC.). THE SILT FENCE WILL RIP AND FAIL.
DO NOT INSTALL SILT FENCE BARRIER FOR AREA INLETS WITHOUT FRAMING THE TOP OF THE POSTS.
THE CORNER POSTS AROUND AREA INLETS ARE STRESSED IN TWO DIRECTIONS WHEREAS A NORMAL SILT FENCE IS ONLY STRESSED IN ONE DIRECTION. THIS ADDED STRESS REQUIRES MORE SUPPORT.

INSPECTION AND MAINTENANCE:

SILT FENCE BARRIER FOR AREA INLETS SHOULD BE INSPECTED EVERY 7 DAYS AND WITHIN 24 HOURS OF A RAINFALL OF 1/2" OR MORE. THE FOLLOWING IS A LIST OF QUESTIONS THAT SHOULD BE ADDRESSED DURING EACH INSPECTION:

DOES WATER FLOW UNDER THE SILT FENCE?
DOES THE SILT FENCE SAG EXCESSIVELY?
HAS THE SILT FENCE TORN OR BECOME DETACHED FROM THE POSTS?
DOES SEDIMENT NEED TO BE REMOVED FROM BEHIND THE AREA INLET BARRIER?

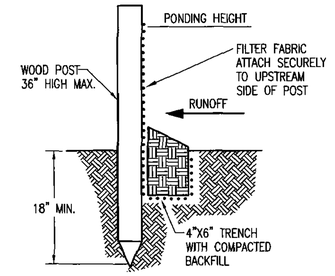


## SILT FENCE BARRIERS

MATERIAL SPECIFICATION:

SILT FENCE FABRIC SHOULD CONFORM TO THE AASHTO M288 96 SILT FENCE SPECIFICATION.
THE POSTS USED TO SUPPORT THE SILT FENCE FABRIC SHOULD BE A HARDWOOD MATERIAL WITH THE FOLLOWING MINIMUM DIMENSIONS: 2" SQUARE (NOMINAL) BY 4' LONG.
SILT FENCE FABRIC SHOULD BE ATTACHED TO THE WOODEN POSTS WITH STAPLES, WIRE, ZIP TIES, OR NAILS.

PLACEMENT:

A SLOPE BARRIER SHOULD BE USED AT THE TOE OF A SLOPE WHEN A DITCH DOES NOT EXIST. THE SLOPE BARRIER SHOULD BE PLACED ON NEARLY LEVEL GROUND 5' TO 10' AWAY FROM THE TOE OF A SLOPE. THE BARRIER IS PLACED AWAY FROM THE TOE OF THE SLOPE TO PROVIDE ADEQUATE STORAGE FOR SETTLING OUT SEDIMENT.
WHEN PRACTICABLE, SILT FENCE SLOPE BARRIERS SHOULD BE PLACED ALONG CONTOURS TO AVOID A CONCENTRATION OF FLOW.
SILT FENCE SLOPE BARRIERS CAN ALSO BE PLACED ALONG RIGHT–OF–WAY FENCE LINES TO KEEP SEDIMENT FROM CROSSING ONTO ADJACENT PROPERTY. WHEN PLACED IN THIS MANNER, THE SLOPE BARRIER WILL NOT LIKELY FOLLOW CONTOURS.

PROPER INSTALLATION METHOD:

EXCAVATE A TRENCH THE LENGTH OF THE PLANNED SLOPE BARRIER THAT IS 6" DEEP BY 4" WIDE.
MAKE SURE THAT THE TRENCH IS EXCAVATED ALONG A SINGLE CONTOUR. WHEN PRACTICABLE, SLOPE BARRIERS SHOULD BE PLACED ALONG CONTOURS TO AVOID A CONCENTRATION OF FLOW. PLACE THE SOIL ON THE UPSLOPE SIDE OF THE TRENCH FOR LATER USE.
ROLL OUT A CONTINUOUS LENGTH OF SILT FENCE FABRIC ON THE DOWNSLOPE SIDE OF THE TRENCH.
PLACE THE EDGE OF THE FABRIC IN THE TRENCH STARTING AT THE TOP UPSLOPE EDGE. LINE ALL THREE SIDES OF THE TRENCH WITH THE FABRIC. BACKFILL OVER THE FABRIC IN THE TRENCH WITH THE EXCAVATED SOIL AND COMPACT. AFTER FILLING THE TRENCH, APPROXIMATELY 24" TO 36" OF SILT–FENCE FABRIC SHOULD REMAIN EXPOSED.
LAY THE EXPOSED SILT FENCE UPSLOPE OF THE TRENCH TO CLEAR AN AREA FOR DRIVING IN THE POSTS. JUST DOWNSLOPE OF THE TRENCH, DRIVE POSTS INTO THE GROUND TO A DEPTH OF AT LEAST 18".
PLACE POSTS NO MORE THAN 4' APART.
ATTACH THE SILT FENCE TO THE ANCHORED POST WITH STAPLES, WIRE, ZIP TIES, OR NAILS.

LIST OF COMMON PLACEMENT/INSTALLATION MISTAKES TO AVOID:

WHEN PRACTICABLE, DO NOT PLACE SILT FENCE SLOPE BARRIERS ACROSS CONTOURS. SLOPE BARRIERS SHOULD BE PLACED ALONG CONTOURS TO AVOID A CONCENTRATION OF FLOW. WHEN THE FLOW CONCENTRATES, IT OVERTOPS THE BARRIER AND THE SILT FENCE SLOPE BARRIER QUICKLY DETERIORATES.
DO NOT PLACE SILT–FENCE POSTS ON THE UPSLOPE SIDE OF THE SILT FENCE FABRIC. IN THIS CONFIGURATION, THE FORCE OF THE WATER IS NOT RESTRICTED BY THE POSTS, BUT ONLY BY THE STAPLES (WIRE, ZIP TIES, NAILS, ETC.). THE SILT FENCE WILL RIP AND FAIL.
DO NOT PLACE SILT FENCE SLOPE BARRIERS IN AREAS WITH SHALLOW SOILS UNDERLAIN BY ROCK. IF THE BARRIER IS NOT SUFFICIENTLY ANCHORED, IT WILL WASH OUT.
SILT FENCE SLOPE BARRIERS MUST BE DUG INTO THE GROUND–SILT FENCE AT GROUND LEVEL DOES NOT WORK BECAUSE WATER WILL FLOW UNDERNEATH.

INSPECTION AND MAINTENANCE:

SILT FENCE SLOPE BARRIERS SHOULD BE INSPECTED EVERY 7 DAYS AND WITHIN 24 HOURS OF A RAINFALL OF 1/2" OR MORE. THE FOLLOWING IS A LIST OF QUESTIONS THAT SHOULD BE ADDRESSED DURING EACH INSPECTION:

ARE THERE ANY POINTS ALONG THE SLOPE BARRIER WHERE WATER IS CONCENTRATING?
DOES WATER FLOW UNDER THE SLOPE BARRIER?
DO THE SILT FENCES SAG EXCESSIVELY?
HAS THE SILT FENCE TORN OR BECOME DETACHED FROM THE POSTS?
DOES SEDIMENT NEED TO BE REMOVED FROM BEHIND THE SLOPE BARRIER?

GARY L. JANZEN LICENSED KANSAS PROFESSIONAL ENGINEER
05/21/13

REVISION DATE: MAY 2013

CITY OF WICHITA
PUBLIC WORKS & UTILITIES ENGINEERING DIVISION

SILT FENCE DITCH CHECK AND BARRIER DETAILS

CITY ENGINEER
GARY JANZEN, P.E.

| PROJECT NUMBER | OCA NUMBER | DATE |
|---|---|---|
| 458-2026-085656 | | ##-##-## |

CITY ENGINEER'S OFFICE
CITY HALL - SEVENTH FLOOR
455 NORTH MAIN STREET
WICHITA, KANSAS 67202-1620
(316) 268-4501

SHEET
C-752-D01
18 OF 24

SW-502

NOTE: POINT A MUST BE HIGHER THAN POINT B
SO THAT WATER FLOWS OVER THE BALES AND
NOT AROUND THEM.

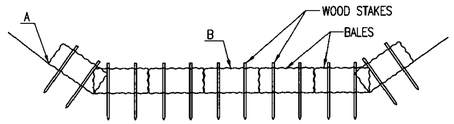


## STRAW BALE DITCH CHECKS

MATERIAL SPECIFICATION:

BALE DITCH CHECKS MAY BE CONSTRUCTED OF WHEAT STRAW, OAT STRAW, PRAIRIE HAY, OR BROMEGRASS HAY THAT IS FREE OF WEEDS DECLARED NOXIOUS BY THE KANSAS STATE BOARD OF AGRICULTURE.
THE STAKES USED TO ANCHOR THE BALES SHOULD BE A HARDWOOD MATERIAL WITH THE FOLLOWING MINIMUM DIMENSIONS: 2" SQUARE (NOMINAL) BY 4' LONG.
OPTIONAL: THE DOWNSTREAM SCOUR APRON SHOULD BE CONSTRUCTED OF A DOUBLE-NETTED STRAW EROSION-CONTROL BLANKET AT LEAST 6' WIDE.
OPTIONAL: THE METAL LANDSCAPE STAPLES USED TO ANCHOR THE EROSION-CONTROL BLANKET SHOULD BE AT LEAST 8" LONG.

PLACEMENT:

BALE DITCH CHECKS SHOULD BE PLACED PERPENDICULAR TO THE FLOWLINE OF THE DITCH.
THE DITCH CHECK SHOULD EXTEND FAR ENOUGH SO THAT THE GROUND LEVEL AT THE ENDS OF THE CHECK IS HIGHER THAN THE TOP OF THE LOWEST CENTER BALE. THIS PREVENTS WATER FROM FLOWING AROUND THE CHECK.
STRAW BALE DITCH CHECKS SHOULD NOT BE PLACED IN DITCHES WHERE HIGH FLOWS ARE EXPECTED. ROCK CHECKS SHOULD BE USED INSTEAD.
BALES SHOULD BE PLACED IN DITCHES WITH SLOPES OF 6% OR LESS. FOR SLOPES STEEPER THAN 6%, ROCK CHECKS SHOULD BE USED.
THE FOLLOWING TABLE PROVIDES CHECK SPACING FOR A GIVEN DITCH GRADE:

DITCH CHECK SPACING

| DITCH GRADE (%) | CHECK SPACING (FEET) |
|---|---|
| 0.5 | 200 |
| 1.0 | 200 |
| 2.0 | 100 |
| 3.0 | 65 |
| 4.0 | 50 |
| 5.0 | 40 |
| 6.0 | 30 |

PROPER INSTALLATION METHOD:

EXCAVATE A TRENCH PERPENDICULAR TO THE DITCH FLOWLINE THAT IS 4" DEEP AND A BALE'S WIDTH WIDE. EXTEND THE TRENCH IN A STRAIGHT LINE ALONG THE ENTIRE LENGTH OF THE PROPOSED DITCH CHECK. PLACE THE SOIL ON THE UPSTREAM SIDE OF THE TRENCH-IT WILL BE USED LATER.
OPTIONAL: ON THE DOWNSTREAM SIDE OF THE TRENCH, ROLL OUT A LENGTH OF EROSION-CONTROL BLANKET (SCOUR APRON) EQUAL TO THE LENGTH OF THE TRENCH. PLACE THE UPSTREAM EDGE OF THE EROSION-CONTROL BLANKET ALONG THE BOTTOM UPSTREAM EDGE OF THE TRENCH. THE EROSION CONTROL BLANKET SHOULD BE ANCHORED IN THE TRENCH WITH ONE ROW OF 8" LANDSCAPE STAPLES PLACED ON 18" CENTERS. THE REMAINDER OF THE EROSION-CONTROL BLANKET (THE PORTION THAT IS NOT LYING IN THE TRENCH) WILL SERVE AS THE DOWNSTREAM SCOUR APRON. THIS SECTION OF THE BLANKET SHOULD BE ANCHORED TO THE GROUND WITH 8" LANDSCAPE STAPLES PLACED AROUND THE PERIMETER OF THE BLANKET ON 18" CENTERS. THE REMAINDER OF THE BLANKET SHOULD BE ANCHORED USING TWO EVENLY SPACED ROWS OF 8" LANDSCAPE STAPLES ON 18" CENTERS PLACED PERPENDICULAR TO THE FLOWLINE OF THE DITCH.
PLACE THE BALES IN THE TRENCH, MAKING SURE THAT THEY ARE BUTTED TIGHTLY. TWO STAKES SHOULD BE DRIVEN THROUGH EACH BALE ALONG THE CENTERLINE OF THE DITCH CHECK, APPROXIMATELY 6" TO 8" IN FROM THE BALE ENDS. STAKES SHOULD BE DRIVEN AT LEAST 12" INTO THE GROUND.
ONCE ALL THE BALES HAVE BEEN INSTALLED AND ANCHORED, PLACE THE EXCAVATED SOIL AGAINST THE UPSTREAM SIDE OF THE CHECK AND COMPACT IT. THE COMPACTED SOIL SHOULD BE NO MORE THAN 3" TO 4" DEEP AND EXTEND UPSTREAM NO MORE THAN 24".

LIST OF COMMON PLACEMENT/INSTALLATION MISTAKES TO AVOID:

DO NOT PLACE A BALE DITCH CHECK DIRECTLY IN FRONT OF A CULVERT OUTLET. IT WILL NOT STAND UP TO THE CONCENTRATED FLOW.
DO NOT PLACE BALE DITCH CHECKS IN DITCHES THAT WILL LIKELY EXPERIENCE HIGH FLOWS. THEY WILL NOT STAND UP TO CONCENTRATED FLOW.
FOLLOW PRESCRIBED DITCH-CHECK SPACING GUIDELINES. IF SPACING GUIDELINES ARE EXCEEDED, EROSION WILL OCCUR BETWEEN THE DITCH CHECKS.
DO NOT ALLOW WATER TO FLOW AROUND THE DITCH CHECK. MAKE SURE THAT THE DITCH CHECK IS LONG ENOUGH SO THAT THE GROUND LEVEL AT THE ENDS OF THE CHECK IS HIGHER THAN THE TOP OF THE LOWEST CENTER BALE.
DO NOT PLACE BALE DITCH CHECKS IN CHANNELS WITH SHALLOW SOILS UNDERLAIN BY ROCK. IF THE CHECK IS NOT ANCHORED SUFFICIENTLY, IT WILL WASH OUT.
BALE DITCH CHECKS MUST BE DUG INTO THE GROUND. BALES AT GROUND LEVEL DO NOT WORK BECAUSE THEY ALLOW WATER TO FLOW UNDER THE CHECK.

INSPECTION AND MAINTENANCE:

BALE DITCH CHECKS SHOULD BE INSPECTED EVERY 7 DAYS AND WITHIN 24 HOURS OF A RAINFALL OF 1/2" OR MORE. THE FOLLOWING IS A LIST OF QUESTIONS THAT SHOULD BE ADDRESSED DURING EACH INSPECTION:

DOES WATER FLOW AROUND THE DITCH CHECK?
DOES WATER FLOW UNDER THE DITCH CHECK?
DOES WATER FLOW THROUGH SPACES BETWEEN ABUTTING BALES?
ARE ANY BALES AND/OR SCOUR APRONS (OPTIONAL) DISLODGED?
ARE BALES DECOMPOSING DUE TO AGE AND/OR WATER DAMAGE?
DOES SEDIMENT NEED TO BE REMOVED FROM BEHIND THE DITCH CHECK?

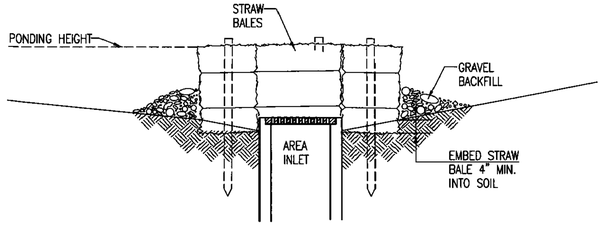


SECTION A-A

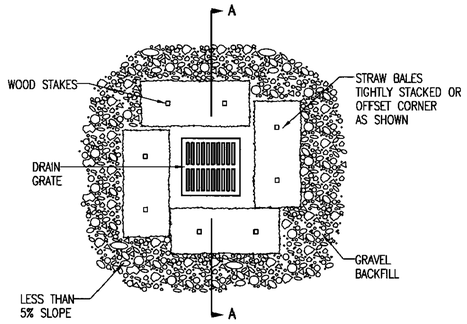


## STRAW BALE BARRIERS FOR AREA INLETS
(INLET PROTECTION)

MATERIAL SPECIFICATION:

BALE AREA INLET BARRIERS SHOULD BE CONSTRUCTED OF WHEAT STRAW, OAT STRAW, PRAIRIE HAY, OR BROMEGRASS HAY THAT IS FREE OF WEEDS DECLARED NOXIOUS BY THE KANSAS STATE BOARD OF AGRICULTURE.
THE STAKES USED TO ANCHOR THE BALES SHOULD BE A HARDWOOD MATERIAL WITH THE FOLLOWING MINIMUM DIMENSIONS: 2" SQUARE (NOMINAL) BY 4' LONG.
TWINE SHOULD BE USED TO BIND BALES. THE USE OF WIRE BINDING IS PROHIBITED BECAUSE IT DOES NOT BIODEGRADE READILY.

PLACEMENT:

BALE AREA INLET BARRIERS SHOULD BE PLACED DIRECTLY AROUND THE PERIMETER OF A DROP INLET. WHEN A BALE AREA INLET BARRIER IS LOCATED NEAR AN INLET THAT HAS STEEP APPROACH SLOPES, THE STORAGE CAPACITY BEHIND THE BARRIER IS DRASTICALLY REDUCED. TIMELY REMOVAL OF SEDIMENT MUST OCCUR FOR A BARRIER TO OPERATE PROPERLY IN THIS LOCATION.

PROPER INSTALLATION METHOD:

EXCAVATE A TRENCH AROUND THE PERIMETER OF THE AREA INLET THAT IS AT LEAST 4" DEEP BY A BALE'S WIDTH WIDE.
PLACE THE BALES IN THE TRENCH, MAKING SURE THAT THEY ARE BUTTED TIGHTLY. SOME BALES MAY NEED TO BE SHORTENED TO FIT INTO THE TRENCH AROUND THE AREA INLET. TWO STAKES SHOULD BE DRIVEN THROUGH EACH BALE, APPROXIMATELY 6" TO 8" IN FROM THE BALE ENDS.
STAKES SHOULD BE DRIVEN AT LEAST 12" INTO THE GROUND.
ONCE ALL THE BALES HAVE BEEN INSTALLED AND ANCHORED, PLACE THE EXCAVATED SOIL AGAINST THE RECEIVING SIDE OF THE BARRIER AND COMPACT IT. THE COMPACTED SOIL SHOULD BE NO MORE THAN 3" TO 4" DEEP.
NOTE: WHEN A BALE AREA INLET BARRIER IS PLACED IN A SHALLOW MEDIAN DITCH, MAKE SURE THAT THE TOP OF THE BARRIER IS NOT HIGHER THAN THE PAVED ROAD. IN THIS CONFIGURATION, WATER MAY SPREAD ONTO THE ROADWAY CAUSING A HAZARDOUS CONDITION.

LIST OF COMMON PLACEMENT INSTALLATION MISTAKES TO AVOID:

BALES SHOULD BE PLACED DIRECTLY AGAINST THE PERIMETER OF THE AREA INLET. THIS ALLOWS OVERTOPPING WATER TO FLOW DIRECTLY INTO THE INLET INSTEAD OF ONTO NEARBY SOIL CAUSING SCOUR. BALE AREA INLET BARRIERS MUST BE DUG INTO THE GROUND. BALES AT GROUND LEVEL DO NOT WORK BECAUSE THEY ALLOW WATER TO FLOW UNDER THE BARRIER.

INSPECTION AND MAINTENANCE:

BALE AREA INLET BARRIERS SHOULD BE INSPECTED EVERY 7 DAYS AND WITHIN 24 HOURS OF A RAINFALL 1/2" OR MORE. THE FOLLOWING IS A LIST OF QUESTIONS THAT SHOULD BE ADDRESSED DURING EACH INSPECTION:

DOES WATER FLOW UNDER THE AREA INLET BARRIER?
DOES WATER FLOW THROUGH SPACES BETWEEN ABUTTING BALES?
ARE ANY BALES DISLODGED?
ARE BALES DECOMPOSING DUE TO AGE AND/OR WATER DAMAGE?
DOES SEDIMENT NEED TO BE REMOVED FROM BEHIND THE AREA INLET BARRIER?

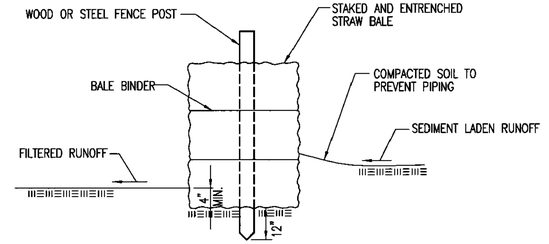


## STRAW BALE BARRIERS

MATERIAL SPECIFICATION:

BALE SLOPE BARRIERS MAY BE CONSTRUCTED OF WHEAT STRAW, OAT STRAW, PRAIRIE HAY, OR BROMEGRASS HAY THAT IS FREE OF WEEDS DECLARED NOXIOUS BY THE KANSAS STATE BOARD OF AGRICULTURE.
THE STAKES USED TO ANCHOR THE BALES SHOULD BE A HARDWOOD MATERIAL WITH THE FOLLOWING MINIMUM DIMENSIONS: 2" SQUARE (NOMINAL) BY 4' LONG.
TWINE SHOULD BE USED TO BIND BALES. THE USE OF WIRE BINDING IS PROHIBITED BECAUSE IT DOES NOT BIODEGRADE READILY.

PLACEMENT:

A SLOPE BARRIER SHOULD BE USED AT THE TOE OF A SLOPE WHEN A DITCH DOES NOT EXIST. THE SLOPE BARRIER SHOULD BE PLACED ON NEARLY LEVEL GROUND 5' TO 10' AWAY FROM THE TOE OF A SLOPE. THE BARRIER IS PLACED AWAY FROM THE TOE OF THE SLOPE TO PROVIDE ADEQUATE STORAGE FOR SETTLING OUT SEDIMENT.
WHEN PRACTICABLE, BALE SLOPE BARRIERS SHOULD BE PLACED ALONG CONTOURS TO AVOID A CONCENTRATION OF FLOW.
BALE SLOPE BARRIERS CAN ALSO BE PLACED ALONG RIGHT-OF-WAY FENCE LINES TO KEEP SEDIMENT FROM CROSSING ONTO ADJACENT PROPERTY. WHEN PLACED IN THIS MANNER, THE SLOPE BARRIER WILL NOT LIKELY FOLLOW CONTOURS.

PROPER INSTALLATION METHOD:

EXCAVATE A TRENCH THE LENGTH OF THE PLANNED SLOPE BARRIER THAT IS 4" DEEP AND A BALE'S WIDTH WIDE. MAKE SURE THAT THE TRENCH IS EXCAVATED ALONG A SINGLE CONTOUR. WHEN PRACTICABLE, SLOPE BARRIERS SHOULD BE PLACED ALONG CONTOURS TO AVOID A CONCENTRATION OF FLOW. PLACE THE SOIL ON THE UPSLOPE SIDE OF THE TRENCH FOR LATER USE.
PLACE THE BALES IN THE TRENCH, MAKING SURE THAT THEY ARE BUTTED TIGHTLY. TWO STAKES SHOULD BE DRIVEN THROUGH EACH BALE ALONG THE CENTERLINE OF THE DITCH CHECK, APPROXIMATELY 6" TO 8" IN FROM THE BALE ENDS. STAKES SHOULD BE DRIVEN AT LEAST 12" INTO THE GROUND.
ONCE ALL THE BALES HAVE BEEN INSTALLED AND ANCHORED, PLACE THE EXCAVATED SOIL AGAINST THE UPSLOPE SIDE OF THE CHECK AND COMPACT IT. THE COMPACTED SOIL SHOULD BE NO MORE THAN 3" TO 4" DEEP.

LIST OF COMMON PLACEMENT/INSTALLATION MISTAKES TO AVOID:

WHEN PRACTICAL, DO NOT PLACE BALE SLOPE BARRIERS ACROSS CONTOURS. SLOPE BARRIERS SHOULD BE PLACED ALONG CONTOURS TO AVOID A CONCENTRATION OF FLOW. CONCENTRATED FLOW OVER A SLOPE BARRIER CREATES A SCOUR HOLE ON THE DOWNSLOPE SIDE OF THE BARRIER. THE SCOUR HOLE EVENTUALLY UNDERMINES THE BALES AND THE BARRIER FAILS.
DO NOT PLACE BALE SLOPE BARRIERS IN AREAS WITH SHALLOW SOILS UNDERLAIN BY ROCK. IF THE BARRIER IS NOT ANCHORED SUFFICIENTLY, IT WILL WASH OUT.
BALE SLOPE BARRIERS MUST BE DUG INTO THE GROUND. BALES AT GROUND LEVEL DO NOT WORK BECAUSE THEY ALLOW WATER TO FLOW UNDER THE BARRIER.

INSPECTION AND MAINTENANCE:

BALE SLOPE BARRIERS SHOULD BE INSPECTED EVERY 7 DAYS AND WITHIN 24 HOURS OF A RAINFALL OF 1/2" OR MORE. THE FOLLOWING IS A LIST OF QUESTIONS THAT SHOULD BE ADDRESSED DURING EACH INSPECTION:

ARE THERE ANY POINTS ALONG THE SLOPE BARRIER WHERE WATER IS CONCENTRATING?
DOES WATER FLOW UNDER THE SLOPE BARRIER?
DOES WATER FLOW THROUGH SPACES BETWEEN ABUTTING BALES?
ARE ANY BALES DISLODGED?
ARE BALES DECOMPOSING DUE TO AGE AND/OR WATER DAMAGE?
DOES SEDIMENT NEED TO BE REMOVED FROM BEHIND THE SLOPE BARRIER?

REVISION DATE: MAY 2013

GARY L. JANZEN LICENSED 16294 PROFESSIONAL ENGINEER KANSAS
5/30/13

CITY OF WICHITA
PUBLIC WORKS & UTILITIES ENGINEERING DIVISION

STRAW BALE DITCH CHECK AND BARRIER DETAILS

CITY ENGINEER
GARY JANZEN, P.E.

| PROJECT NUMBER | OCA NUMBER | DATE |
|---|---|---|
| 458-2026-085656 | | ##-##-## |

CITY ENGINEER'S OFFICE
CITY HALL - SEVENTH FLOOR
455 NORTH MAIN STREET
WICHITA, KANSAS 67202-1620
(316) 268-4501

SHEET
C-753-D01
19 OF 24

SW-503

GENERAL NOTES

1. THIS SHEET IS INTENDED TO PROVIDE GUIDELINES AS TO WHAT TYPES OF EROSION CONTROL DEVICES WILL BE INSTALLED DURING THE CONSTRUCTION PROCESS. CONTRACTORS ARE EXPECTED TO BID PROJECTS ACCORDINGLY.

2. EROSION CONTROL DEVICES MUST BE MAINTAINED BY THE CONTRACTOR THROUGHOUT THE CONSTRUCTION PROCESS AND UNTIL THE DISTURBED EARTH IS RESTABILIZED.

3. IF THE PROJECT WILL DISTURB 1 ACRE OR MORE, A FEDERAL/STATE NPDES STORMWATER PERMIT IS REQUIRED. A DETAILED STORMWATER POLLUTION PREVENTION PLAN, IS REQUIRED. THE EROSION CONTROL DEVICES SHOWN ON THIS SHEET ARE CONSIDERED TO BE THE MINIMUM TO BE SHOWN IN THE POLLUTION PREVENTION PLAN.

4. FOR PROJECTS DISTURBING LESS THAN 1 ACRE, CONTRACTORS ARE ENCOURAGED TO PREPARE STORMWATER POLLUTION PREVENTION PLANS PRIOR TO CONSTRUCTION. EROSION CONTROL DEVICES MUST BE USED ON ALL PROJECTS.

5. FAILURE TO USE AND MAINTAIN EROSION CONTROL DEVICES IS A VIOLATION OF SECTION 16.32 OF THE CITY CODE AND WILL SUBJECT THE CONTRACTOR TO THE PENALTIES PROVIDED FOR THEREIN.

6. THE APPLICATION OF EROSION CONTROL DEVICES SHOWN ON THIS SHEET IS FOR SITUATIONS NORMALLY ENCOUNTERED. FROM TIME TO TIME, SITUATIONS WILL ARISE THAT MAY REQUIRE A DIFFERENT DEVICE OTHER THAN THOSE SHOWN. EROSION CONTROL DEVICES, OTHER THAN THOSE SHOWN, MAY BE UTILIZED AS LONG AS THEY ARE EFFECTIVE AND MAINTAINED.

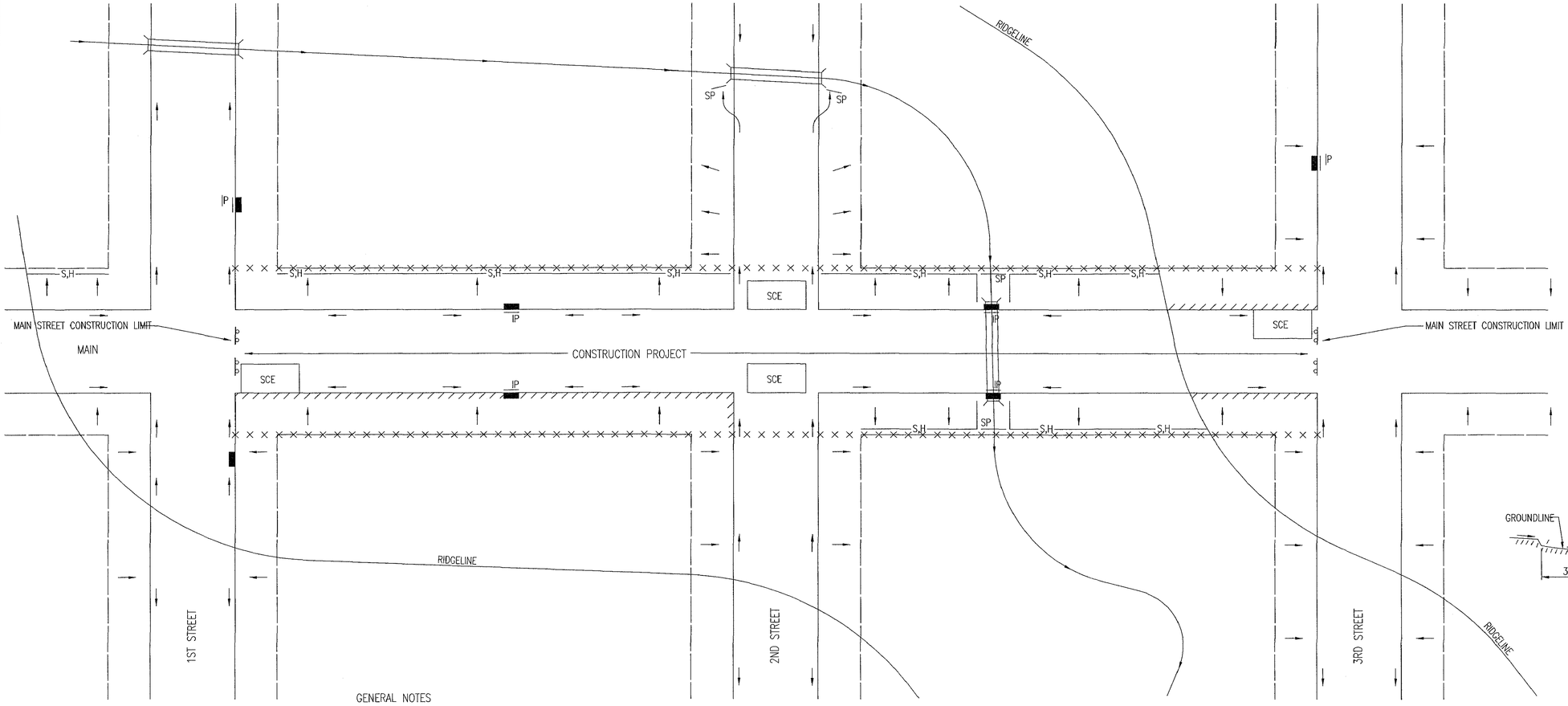


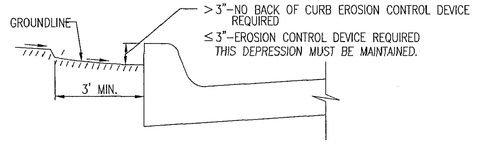


## CURB BACKFILL DETAIL

THIS IS A TEMPORARY MEASURE ONLY, WHEN APPROVED BY THE PROJECT ENGINEER. THE DIRT GRADE BEHIND THE CURB SHALL BE BROUGHT TO THE TOP OF CURB, WITH TEMPORARY EROSION CONTROL MAT OR PERMANENT VEGETATION PLACED, PRIOR TO THE COMPLETION OF ALL PROJECTS.

LEGEND

- R-O-W LIMITS
- DRAINAGE FLOW PATH
- × × × × × R/W LIMIT WITHIN CONSTRUCTION LIMIT
- STORM WATER INLETS
- IP — INLET PROTECTION
- S,H — SILT FENCE OR HAY BALE BARRIER
- SP — STREAM PROTECTION
- SCE — STABILIZED CONSTRUCTION ENTRANCE
- BACK OF CURB PROTECTION

GENERAL NOTES

1. THE INTENT OF ALL EROSION CONTROL DEVICES IS TO KEEP ALL SEDIMENT CONFINED TO THE CONSTRUCTION SITE, AND OUT OF ALL UNDERGROUND PIPES, DITCHES, LAKES, AND OTHER DRAINAGE FACILITIES, AND OFF OF STREETS.

2. THE POINT OF COMPLIANCE IS GENERALLY THE RIGHT-OF-WAY LINES WITHIN THE LIMITS OF CONSTRUCTION.

3. EROSION CONTROL DEVICES WILL BE REQUIRED AT ALL POINTS ALONG THE PROJECT WHERE DISTURBED EARTH CAN DRAIN ONTO PRIVATE PROPERTY.

4. INLET PROTECTION DEVICES WILL BE REQUIRED WHEREVER WATER CAN DRAIN OFF THE PROJECT SITE INTO AN INLET, INCLUDING ANY SIDE STREET INLETS.

5. EROSION CONTROL DEVICES SHALL BE INSTALLED AT CREEK CROSSINGS SO AS TO PREVENT SEDIMENT FROM ENTERING THEREIN.

6. STABILIZED CONSTRUCTION ENTRANCES SHALL BE PROVIDED, AS NEEDED, TO PREVENT MUD FROM TRACKING ONTO STREETS NOT UNDER CONSTRUCTION AND ON STREETS WITHIN THE PROJECT LIMITS IF TRAFFIC IS BEING MAINTAINED THROUGH THE PROJECT.

7. ANY MUD TRACKED ONTO STREETS MUST BE REMOVED AT THE END OF EACH WORK DAY.

8. THE CONTACTOR WILL BE REQUIRED TO PLACE EROSION CONTROL DEVICES BACK OF CURB, WHENEVER WATER CAN DRAIN OVER CURB, TO KEEP ERODED SOIL OUT OF THE GUTTERLINES, IN ACCORDANCE WITH THE FOLLOWING:
   A. THE DEVICE REQUIRED WILL BE APPROVED EROSION CONTROL MAT LISTED ON THE CITY'S APPROVED MATERIAL LIST. SAID BLANKET SHALL BE PLACED OVER THE APPROPRIATE SEED AND FERTILIZER, AS SPECIFIED IN THE PROJECT SPECIFICATIONS. (SEE SOIL EROSION BMPs – BACK OF CURB SEDIMENT BARRIER DETAILS)
   B. THIS DEVICE SHALL BE INSTALLED IMMEDIATELY WHENEVER THE CURB IS BACKFILLED TO WITHIN 3" OF THE TOP OF CURB. (SEE CURB BACKFILL DETAIL) OTHER BMP'S MAY BE REQUIRED AT LOCATIONS WHERE CONCENTRATED FLOW CARRIES SEDIMENT OVER THE CURB.
   C. ADDITIONALLY, OTHER EROSION CONTROL DEVICES (HAY BALES, SILT FENCE, ETC.) WILL BE INSTALLED AT LOCATIONS OF CONCENTRATED FLOW RESULTING IN SEDIMENT OVERRUNNING THE MAT.
   D. SHOULD THE PROJECT PLANS SPECIFY THAT THE RIGHT-OF-WAY IS TO BE SODDED, THE EXCELSIOR MAT WILL NOT BE REQUIRED SO LONG AS THE SOD IS PLACED WITHIN 48 HOURS AFTER CURB BACKFILL REACHES A HEIGHT OF 3" OR LESS FROM TOP OF CURB. (SEE CURB BACKFILL DETAIL)

GARY L. JANZEN — LICENSED PROFESSIONAL ENGINEER — 16284 — KANSAS — PROFESSIONAL ENGINEER
06/05/15

REVISION: JUNE 2015

CITY OF WICHITA
PUBLIC WORKS & UTILITIES ENGINEERING DIVISION

STREET IMPROVEMENT PROJECTS

CITY ENGINEER
GARY JANZEN, P.E.

| PROJECT NUMBER | OCA NUMBER | DATE |
|---|---|---|
| 458-2026-085656 | | ##-##-## |

CITY ENGINEER'S OFFICE
CITY HALL - SEVENTH FLOOR
455 NORTH MAIN STREET
WICHITA, KANSAS 67202-1620
(316) 268-4501

SHEET
C-754-D01
20 OF 24

SW-504

## PHASE 1 – INITIAL EARTHWORK AND UTILITIES (EXCEPT STORM SEWER)

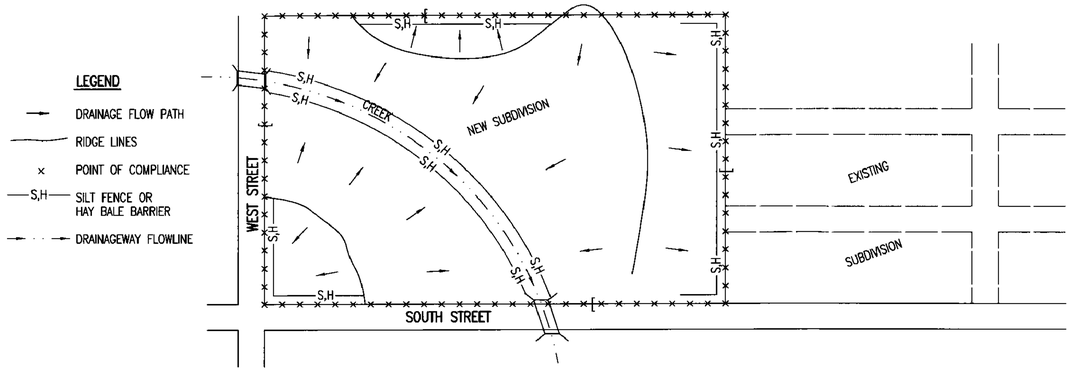


1. DURING THIS PHASE OF SUBDIVISION CONSTRUCTION, THE POINTS OF COMPLIANCE ARE THE PERIMETER BOUNDARIES AND ANY DRAINAGE WAYS OR STORM SEWERS DRAINING THROUGH OR FROM THE SITE. SHOULD LAKES BE CONSTRUCTED WITHIN THE SUBDIVISION THAT WILL DISCHARGE DURING STORMS, THEY ARE ALSO A POINT OF COMPLIANCE.
2. HAY BALES OR SILT FENCE MUST BE CONSTRUCTED ALONG THE PROPERTY LINE WHERE ON SITE WATER CAN DRAIN OFF THE PROPERTY. THESE EROSION CONTROL DEVICES WILL ALSO BE INSTALLED ALONG ANY DRAINAGE DITCH OR LAKE THAT CAN DISCHARGE.
3. SHOULD SILT OR SEDIMENT ENTER THE DITCHES OR STREETS ON THE ADJACENT BOUNDARY STREETS, APPROPRIATE EROSION CONTROL DEVICES WILL BE PLACED WITHIN THE SUBDIVISION TO PREVENT THIS.
4. ANY MUD TRACKED ONTO ADJACENT STREETS WILL BE REMOVED WITHIN 48 HOURS OR BY FRIDAY AT 6:00 PM, WHICHEVER IS EARLIER.
5. CONTRACTORS WORKING WITHIN THE SITE WILL NOT BE REQUIRED TO USE INDIVIDUAL EROSION CONTROL DEVICES AS LONG AS THOSE SPECIFIED ABOVE ARE IN PLACE AND EFFECTIVE. CONTRACTORS WORKING ON THE BOUNDARY LINE STREETS OR ON ADJACENT PROPERTIES TO EXTEND UTILITIES ARE EXPECTED TO USE EROSION CONTROL DEVICES AT THEIR WORK LOCATIONS, AS NEEDED.
6. UTILIZE STABILIZED CONSTRUCTION ENTRANCE AT ENTRANCE AND EXIT ONTO ANY EXISTING PUBLIC STREETS.
7. IF THE INITIAL EARTH WORK AND UTILITIES ARE DONE AS PART OF A PUBLIC IMPROVEMENT PROJECT, THESE EROSION CONTROL DEVICES WILL BE INSTALLED BY THE CONTRACTOR AS SPECIFIED IN THE INDIVIDUAL PROJECT CONTRACTS. THE CONTRACTOR WILL MAINTAIN THE DEVICES UNTIL COMPLETION OF THE CONTRACT, AT WHICH TIME THE DEVELOPER WILL ASSUME MAINTENANCE RESPONSIBILITIES. IF THESE CONTRACTS ARE NOT PUBLIC IMPROVEMENT PROJECTS, THE DEVELOPER WILL BE RESPONSIBLE FOR INSTALLING AND MAINTAINING THESE DEVICES.
8. WITHIN 14 DAYS OF COMPLETION OF EARTHWORK ACTIVITIES IN ANY GIVEN AREA, THAT AREA SHALL BE TEMPORARILY OR PERMANENTLY SEEDED AND MULCHED.

## PHASE 2 – INSTALLATION OF STORM SEWER

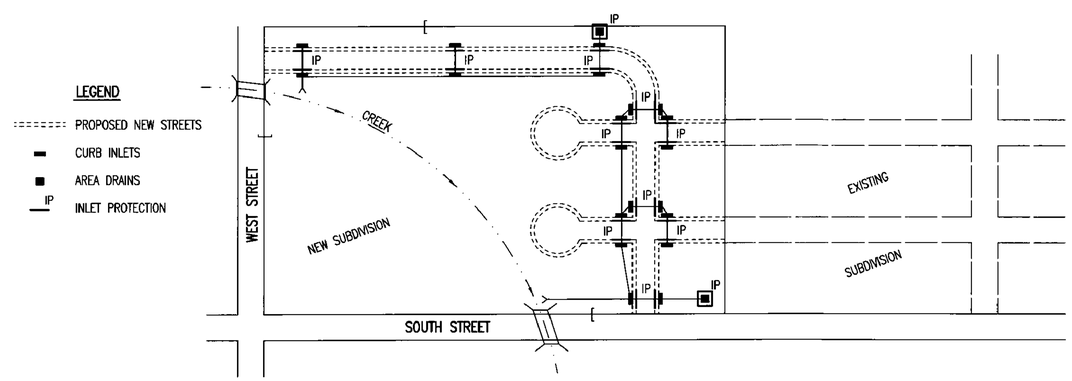


1. DURING THIS PHASE OF SUBDIVISION DEVELOPMENT, ALL EROSION CONTROL DEVICES REQUIRED IN PHASE 1 SHALL REMAIN IN PLACE AND BE MAINTAINED.
2. AS NEW STORM SEWERS, WITH INLETS, ARE INSTALLED, THE STORM SEWERS MUST NOW BE PROTECTED SO ALL NEW INLETS BECOME POINTS OF COMPLIANCE.
3. AREA DRAINS – AS SOON AS WATER CAN FLOW INTO THESE DRAINS, HAY BALE OR SILT FENCE PROTECTION WILL BE INSTALLED AROUND THEM.
4. CURB OPENING INLETS – AS SOON AS WATER CAN FLOW INTO THESE DRAINS, INLET PROTECTION DEVICES MUST BE INSTALLED. IF WATER CANNOT FLOW INTO CURB INLETS UNTIL STREET CONSTRUCTION IS COMPLETE, THEN STREET CONTRACTOR WILL INSTALL INLET PROTECTION. SEE PHASE 3 – STREET CONSTRUCTION.
5. THE STORM SEWER CONTRACTOR WILL BE RESPONSIBLE FOR INSTALLING THESE DEVICES.
6. THE SUBDIVISION DEVELOPER WILL MAINTAIN THESE EROSION CONTROL DEVICES ONCE INSTALLED.
7. ALL DISTURBED GROUND WILL BE FINAL GRADED AND TEMPORARILY OR PERMANENTLY SEEDED WITHIN 14 DAYS IF COMPLETION OF WORK IN ANY GIVEN PART OF THE SUBDIVISION.
8. ONCE ALL DISTURBED GROUND DRAINING TO AN INLET HAS BEEN RESTABILIZED WITH GRASS OR SOD, THE SUBDIVISION DEVELOPER WILL BE RESPONSIBLE FOR PERMANENTLY REMOVING THE INLET PROTECTION.

## PHASE 3 – STREET CONSTRUCTION

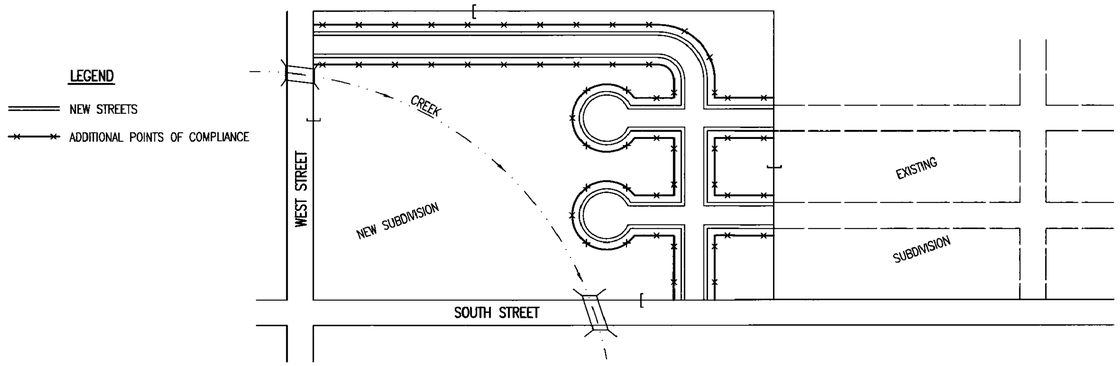


1. DURING THIS PHASE OF SUBDIVISION CONSTRUCTION, NEW STREETS ARE INSTALLED. ALL EROSION CONTROL DEVICES INSTALLED DURING PHASE 1 AND 2 MUST STILL BE MAINTAINED. THE POINT OF COMPLIANCE NOW SHIFTS TO THE BACK OF CURB ALONG EACH STREET.
2. CURB OPENING INLET PROTECTION:
   A. SUMP AREAS – INLET PROTECTION SHALL BE PROVIDED WHEN STREET SUBGRADE WORK IS COMPLETED.
   B. NON–SUMP LOCATIONS – PROVIDE INLET PROTECTION AS SOON AS BASE COURSE ASPHALT IS INSTALLED, BEFORE THE SURFACE COURSE LIFT.
3. EROSION CONTROL DEVICES WILL BE REQUIRED BACK OF CURB WHEREVER WATER CAN FLOW OVER THE CURB AND THE CURB HAS BEEN BACKFILLED TO WITHIN 3" OR LESS OF THE TOP OF CURB (SEE CURB BACKFILL DETAIL). FOR CURBS NOT YET ENTIRELY BACKFILLED (3" OR MORE BELOW TOP OF CURB), ADDITIONAL DEVICES WILL BE REQUIRED AT POINTS WHERE WATER BREAKS OVER CURB WHICH COULD RESULT IN THE PLACEMENT OF SEDIMENT IN THE GUTTER.
4. SEE DETAIL SHEET FOR BACK OF CURB PROTECTION.
5. THE BACK OF CURB PROTECTION SPECIFIED ON THIS PLAN MAY HAVE TO BE SUPPLEMENTED WITH HAY BALE OR SILT FENCE EROSION CONTROL DEVICES AT LOCATIONS WHERE CONCENTRATED FLOW RESULTS IN SEDIMENT BEING CARRIED OVER THE EXCELSIOR MATS.
6. THE STREET CONTRACTOR WILL BE RESPONSIBLE FOR INSTALLING BACK OF CURB EROSION CONTROL DEVICES.
7. THE INDIVIDUAL LOT OWNERS WILL BE RESPONSIBLE FOR MAINTAINING THE BACK OF CURB EROSION CONTROL DEVICES IN FRONT OF THEIR LOTS UNTIL SUCH TIME AS ADJACENT DISTURBED EARTH IS STABILIZED WITH GRASS OR SOD.

### GENERAL NOTES

1. THE INTENT OF ALL EROSION CONTROL DEVICES IS TO PREVENT ERODED SOIL FROM ENTERING DITCHES, STORM SEWERS, LAKES, STREETS OR ANY OTHER OTHER DRAINAGE FEATURE.
2. THIS SHEET IS INTENDED TO PROVIDE GUIDELINES AS TO WHAT TYPE OF EROSION CONTROL DEVICES WILL BE INSTALLED DURING THE CONSTRUCTION PROCESS. CONTRACTORS ARE EXPECTED TO BID PROJECTS ACCORDINGLY.
3. EROSION CONTROL DEVICES SHALL BE MAINTAINED DURING THE CONSTRUCTION PROCESS TO REMAIN EFFECTIVE. MAINTENANCE SHALL BE AS INDICATED ON SOIL EROSION BMP'S DETAIL SHEETS.
4. PERSONS DESTROYING EROSION CONTROL DEVICES SHALL BE RESPONSIBLE FOR IMMEDIATELY REPAIRING THEM OR INSTALLING SUITABLE REPLACEMENT DEVICES.
5. THE DEVELOPMENT OF ANY SUBDIVISION THAT DISTURBS 1 ACRE OR MORE WILL REQUIRE A FEDERAL/STATE NPDES STORMWATER PERMIT. THE PREPARATION OF A STORMWATER POLLUTION PREVENTION PLAN IS REQUIRED. EROSION CONTROL DEVICES ARE REQUIRED. THE DETAILS SHOWN ON THIS SHEET ARE THE MINIMUM STANDARDS TO BE SHOWN ON POLLUTION PREVENTION PLANS.
6. FOR SUBDIVSIONS SMALLER THAN 1 ACRE, SOIL EROSION DEVICES ARE REQUIRED. ALSO, DEVELOPERS AND CONTRACTORS ARE ENCOURAGED TO DEVELOP POLLUTION PREVENTION PLANS FOR EACH PROJECT PRIOR TO CONSTRUCTION.
7. FAILURE TO USE AND MAINTAIN SOIL EROSION DEVICES IS A VIOLATION OF SECTION 16.32 OF THE CITY CODE AND WILL SUBJECT THE SUBDIVISION DEVELOPER AND CONTRACTORS TO THE PENALTIES PROVIDED THEREIN.
8. THE APPLICATION OF EROSION CONTROL DEVICES SHOWN ON THIS SHEET IS FOR SITUATIONS NORMALLY ENCOUNTERED. FROM TIME TO TIME, SITUATIONS WILL ARISE THAT MAY REQUIRE DEVICES OTHER THAN THAT SHOWN. EROSION CONTROL DEVICES, OTHER THAN THOSE SHOWN, MAY BE UTILIZED SO LONG AS THEY ARE EFFECTIVE AND MAINTAINED.
9. A STABILIZED EARTH SURFACE IS DEFINED AS ONE THAT IS HARD SURFACED WITH CONCRETE, ASPHALT, OR THE LIKE, OR ONE ON WHICH 70% OF THE GRASS HAS GERMINATED ON THE ENTIRE SURFACE.

**SEE DETAIL SHEET FOR BACK OF CURB PROTECTION DETAIL**

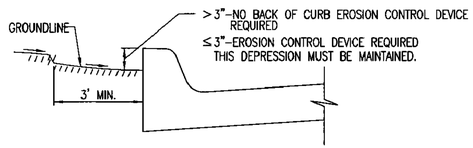


### CURB BACKFILL DETAIL (STREET CONSTRUCTION ONLY)

THIS IS A TEMPORARY MEASURE ONLY, WHEN APPROVED BY THE PROJECT ENGINEER. THE DIRT GRADE BEHIND THE CURB SHALL BE BROUGHT TO THE TOP OF CURB, WITH TEMPORARY EROSION CONTROL MAT OR PERMANENT VEGETATION PLACED, PRIOR TO THE COMPLETION OF ALL PROJECTS.

REVISION DATE: MAY 2013

GARY L. JANZEN LICENSED 18294 KANSAS PROFESSIONAL ENGINEER
05/13/13

CITY OF WICHITA
PUBLIC WORKS & UTILITIES ENGINEERING DIVISION

*SUBDIVISION DEVELOPMENT PROCESS*

CITY ENGINEER
*GARY JANZEN, P.E.*

| PROJECT NUMBER | OCA NUMBER | DATE |
|---|---|---|
| 458-2026-085656 | | ##-##-## |

*CITY ENGINEER'S OFFICE*
*CITY HALL - SEVENTH FLOOR*
*455 NORTH MAIN STREET*
*WICHITA, KANSAS 67202-1620*
*(316) 268-4501*

SHEET
C-755-D01
21 OF 24

SW-505

# FINAL PLAT
# RIVINGTON ADDITION
## AN ADDITION TO WICHITA, SEDGWICK COUNTY, KANSAS

Rivington Addition (SUB2026-00022)

*CONTINUED ON SHEET 2*

part of **Reserve C**

**Reserve G**
COURTYARDS AT GREENWICH HEIGHTS

140' Right-of-Way Easement to Kansas Gas and Electric Co. Recorded Bk. 2, Pg. 1267 Dated: 12/31/1912

20' Drainage & Sanitary Sewer Easement

20' Sanitary Sewer Easement

BRACKEN ST.

HIDDEN GLEN ST.

WHITE TAIL ST.

EAGLE ST.

OAKMOUNT ST.

HIDDEN GLEN ST.

OAKMOUNT ST.

HIDDEN GLEN ST.

EAGLE ST.

UNPLATTED

*CONTINUED ON SHEET 2*

**Reserve C**
508,795 s.f.
11.68 ac.

**Reserve B**
108,012 s.f.
2.48 ac.

**Reserve A**
11,285 s.f.
0.26 ac.

**Res. E**
4,803 s.f.
0.11 ac.

**Res. F**
11,473 s.f.
0.26 ac.

**Res. G**
0.01 ac.
528 s.f.

20' Drainage & Utility Easement

10' Utility Easement

20' Sanitary Sewer Easement

(No width) Easement to The Kansas Telephone and Telegraph Company Recorded Misc. Rec. 86, Pg. 1267 Dated: 4/20/1931

Fnd. ½" rebar w/ Abbott id. cap

S00°46'55"E 24.93'(M)

S88°41'39"W 1327.44'(CM)

S88°41'39"W 1327.36'

S88°41'20"W 1327.35'(M)

E. 37th ST. N.

Bass of Bearings: Kansas coordinate system of 1983 south zone bearing of S88°41'39"W 2654.64'(M)

BM#100

BM#101

BM#13

Complete Access Control 590.86'

One Full Movement Opening 100.00'

Complete Access Control 424.97'

One Full Movement Opening 100.00'

Complete Access Control 111.53'

Reserve A
COURTYARDS AT BROOKFIELD 10

1/4

SW. cor., SE ¼, Sec. 27, T26S, R2E, 6th P.M. Fnd. 1" Pipe 3" below road surface

1

FOUR OAKS ADDITION

2

SE cor., SE ¼, Sec. 27, T26S, R2E, 6th P.M. Fnd. ⅝" Rebar 2" below asphalt road surface

ERNEST PATRICK FINN LICENSED PS-1459 KANSAS PROFESSIONAL SURVEYOR

R 2 E
E. 45th St. N.
T 26 S
N. Greenwich Rd.
27
N. 127th St. E.
PLAT LOCATION
E. 37th St. N.

**VICINITY MAP**

SCALE: 1"=60'
0 60 120

N

Basis of Bearings: Bearing of N88°41'39"E on the south line of the Southeast Quarter, Section 27, Township 26 South, Range 2 East of the Sixth Principal Meridian, Wichita, Sedgwick County, Kansas. This plat is surveyed and platted on the Horizontal Datum based on the Kansas Coordinate System of 1983, NAD83(2011), EPOCH: 2010.0000, South Zone and based on the "US Survey foot" definition. Coordinates shown have been modified to the ground using a combined adjustment factor of 1.0001200144. State Plane coordinates can be calculated by multiplying the shown values by 0.9998800000.

## LEGEND

Date of Survey: February 2026

- △ = Section Corner Monument Found or Set
- ○ = Found Monument (see annotation for type)
- ● = Set ⅝" rebar w/ MKEC CLS 39 id. cap
- ✣ = Benchmark
- (M) = Measured
- (CM) = Calculated from Measurement
- *1* = Lot
- (1) = Block

| MINIMUM PAD ELEVATIONS *LOWEST OPENINGS* | | |
|---|---|---|
| LOT(S) *inclusive* | BLOCK | ELEVATION *NAVD 88* |
| 1-9 | 1 | 1376.9 |
| 32-33 | 2 | 1388.0 |
| 119-122 | 2 | 1376.0 |
| Reserve D | | 1388.0 |

## FLOODWAY NOTE:

FEMA floodplain and regulatory floodway boundaries are subject to periodic change and such change may affect the intended land use within the subdivision. Portions of the land within the plat boundaries are encumbered with a floodplain at the time of final platting. No permanent buildings shall be constructed within the floodplain, nor any fill, change in grade, creation of channel or other work be carried on without the written permission of the Floodplain Manager. For further information, see current applicable FEMA Flood Insurance Rate Maps (FIRM). See drainage plan/report on file with the City of Wichita for the base flood elevations and floodway/floodplain delineations.

## NOTE:

This plat of "Rivington Addition" is subject to the conditions of the Planned Unit Development PUD No. 157. The platted building setbacks are established with the PUD or as shown hereon.

## BENCHMARKS

BM#100 ✣ ¾" rebar with Aluminum MKEC control id cap on east side of field entrance, north side of 37th Street, approx. 675.8 feet east and 23.1 feet north of the SW. corner of SE ¼, Sec. 27, T26S, R2E.
Elev.=1371.878 NAVD88

BM#101 ✣ "+" Cut in concrete filed entrance, south side of 37th Street, approx. 128.8 feet east and 10.2 feet south of the SW. corner of SE ¼, Sec. 27, T26S, R2E.
Elev.=1372.269 NAVD88

BM#13 ✣ "+" Cut on the midpoint of a curb return of Ritchfield Circle, approx. 200 feet west and 28 feet south of the SE. corner of SW ¼, Sec. 27, T26S, R2E (offsite).
Elev.=1375.087 NAVD88

MKEC
Wichita, KS • 316.684.9600

# FINAL PLAT
# RIVINGTON ADDITION
## AN ADDITION TO WICHITA, SEDGWICK COUNTY, KANSAS

Rivington Addition (SUB2026-00022)

*CONTINUED ON SHEET 3*

*CONTINUED ON SHEET 1*

*CONTINUED ON SHEET 3*

*CONTINUED ON SHEET 1*

part of **Reserve C**

140' Right-of-Way Easement Granted to Northern Natural Gas Co. Recorded Bk. 2, Pg 1267 Dated: 1/20/1972

GREENWICH HEIGHTS

N00°54'49"W 2659.18'(CM)
S00°54'49"E 2599.00'
S00°54'53"E 2634.25'(M)

N00°57'45"W 2115.65'

BRACKEN ST.
BRACKEN CIR.
QUAIL RIDGE ST.
COLLINA ST.
COLLINA CIR.
HIDDEN GLEN ST.
WHITE TAIL ST.
EAGLE ST.

Res. I — Fire Apparatus Road Easement
Res. H — Fire Apparatus Road Easement

UNPLATTED

R 2 E
E. 45th St. N.
T 26 S
N. Greenwich Rd.
27
N. 127th St. E.
E. 37th St. N.
PLAT LOCATION

VICINITY MAP

N

SCALE: 1"=60'
0 60 120

## LEGEND

Date of Survey: February 2026

- △ = Section Corner Monument Found or Set
- ○ = Found Monument (see annotation for type)
- ● = Set ⅝" rebar w/ MKEC CLS 39 id. cap
- ⊕ = Benchmark
- (M) = Measured
- (CM) = Calculated from Measurement
- *1* = Lot
- (1) = Block

ERNEST PATRICK FINK LICENSED PS-1459 KANSAS PROFESSIONAL SURVEYOR

| MINIMUM PAD ELEVATIONS *LOWEST OPENINGS* | | |
|---|---|---|
| LOT(S) *inclusive* | BLOCK | ELEVATION *NAVD 88* |
| 1-9 | 1 | 1376.9 |
| 32-33 | 2 | 1388.0 |
| 119-122 | 2 | 1376.0 |
| Reserve D | | 1388.0 |

MKEC
Wichita, KS • 316.684.9600



U:\ETIMES\Work\Projects\20250616001\07_Design\Survey\Plat\Rivington 20250617 CADSHT.dwg, 06/05/2026, 11:36:15 AM, CST
Rivington Addition (SUB2026-00022)

# FINAL PLAT
# RIVINGTON ADDITION
## AN ADDITION TO WICHITA, SEDGWICK COUNTY, KANSAS

Rivington Addition (SUB2026-00022)

NW. cor., SE ¼, Sec. 27, T26S, R2E, 6th P.M. Fnd. ½" rebar w/ yellow illegible id. cap

NE. cor., SE ¼, Sec. 27, T26S, R2E, 6th P.M. Fnd. ¾" Pipe 12" below road surface

Fnd. ½" rebar w/ LS 1037 id. cap

N88°45'45"E 1323.76'(M)

S01°13'40"E 2656.11'(M)

N88°45'27"E 1324.02'(M)

BM#14

UNPLATTED

UNPLATTED

140.00' | 70.00' | 60.00' | 60.00' | 60.00' | 60.00' | 60.00' | 60.00' | 60.00' | 60.00' | 60.00' | 60.00' | 60.00' | 64.65' | 449.37'

30' No Easement

20' Drainage and Utility Easement

25' Water & Sanitary Sewer Easement | 25' Drainage Easement | 15.00' | 30.00' | 15.00' | 10' Utility Easement | N00°54'49"W 135.01'

N01°14'33"W 135.02' | N01°14'33"W 146.34' | N01°14'33"W 172.19' | N01°14'33"W 143.57' | N01°14'33"W 136.54' | N01°14'33"W 147.88' | N01°14'33"W 158.97' | N01°14'33"W 161.30' | N01°14'33"W 155.08' | N01°14'33"W 150.02' | N01°14'33"W 155.72' | N01°14'33"W 171.61'

**44** 9,503 s.f. 0.22 ac. | **43** 8,331 s.f. 0.19 ac. | **42** 9,708 s.f. 0.22 ac. | **41** 9,346 s.f. 0.21 ac. | **40** 8,308 s.f. 0.19 ac. | **39** 8,452 s.f. 0.19 ac. | **38** 9,250 s.f. 0.21 ac. | **37** 9,651 s.f. 0.22 ac. | **36** 9,534 s.f. 0.22 ac. | **35** 9,123 s.f. 0.21 ac. | **34** 9,142 s.f. 0.21 ac. | **33** 10,535 s.f. 0.24 ac.

1.87' | 10' Utility Easement | 61.38' | 9.30' | 66.84' | 66.66' | 13.30' | 47.95' | 10' Utility Easement | 61.07' | 60.10' | 4.44' | 55.93' | 60.23' | 60.28' | 42.75' | 23.87'

31.35' | 37.56' | 20' Util. Esmt. | S88°45'27"W 31.35' | N01°14'33"W 49.00' | 37.84' | MULBERRY CIR. | Δ=44°34'55" R=160.00' L=217.54' | MULBERRY ST. | Δ=25°21'00" R=350.00' L=154.87' | Δ=25°54'40" R=450.00' L=203.51' | S75°21'40"E 23.87' | 23.87'

31.35' | 86.62' | 52.80' | 60.39' | 60.05' | 43.38' | 17.16' | 60.11' | 60.91' | 19.00' | 10' Utility Easement | 23.87' | 3.86' | 97.25' | 361.62'

**2** | **45** 8,370 s.f. 0.19 ac. | **23** 10,285 s.f. 0.24 ac. | **24** 9,380 s.f. 0.22 ac. | **25** 7,345 s.f. 0.17 ac. | **26** 7,162 s.f. 0.16 ac. | **27** 7,470 s.f. 0.17 ac. | **28** 7,826 s.f. 0.18 ac. | **29** 7,573 s.f. 0.17 ac. | **30** 8,048 s.f. 0.18 ac.

63.25' | 41.36' | 187.20' | 89.85' | S00°54'53"E 126.30' | S00°54'53"E 119.60' | S00°54'53"E 120.37' | S00°54'53"E 128.78' | S00°54'53"E 130.21' | S00°54'53"E 129.05' | 44.44'

N89°05'07"E 128.08' | N89°05'07"E 147.58' | 10' Utility Easement | 10' Utility Easement | 20' Drainage and Utility Easement | 70.00' | 60.00' | 60.00' | 60.00' | 60.00' | 78.69'

**Reserve D** 196,398 s.f. 4.51 ac.

N00°54'49"W 54.00' | **46** 6,521 s.f. 0.15 ac. | 10' Utility Easement | 61.32' | L=101.76' | 60.84' | 60.00' | N00°54'53"W 142.11' | N89°05'07"E 111.99' | **22** 9,194 s.f. 0.21 ac. | 20' Drainage and Utility Easement | N89°05'07"E 154.32' | N89°05'07"E 146.98' | N89°05'07"E 111.71'

60.00' | **47** 6,660 s.f. 0.15 ac. | N89°05'07"E 113.12' | 60.25' | 58° | 6.03' | 12.68' | **21** 8,918 s.f. 0.20 ac. | S89°05'07"W 142.44' | 60.00' | 125.63' | 85.21' | 37.71'

60.00' | **48** 7,156 s.f. 0.16 ac. | N89°05'07"E 125.50' | 51.93' | 4.20' | 2.53' | **20** 8,212 s.f. 0.19 ac. | 60.00' | 59.37' | 60.00' | N89°05'07"E 132.05'

60.00' | **49** 7,845 s.f. 0.18 ac. | N89°05'07"E 135.20' | 10' Utility Easement | 61.19' | 60.00' | **19** 7,723 s.f. 0.18 ac. | S89°05'07"W 126.13' | 60.00' | 88.38'

60.00' | **50** 8,283 s.f. 0.19 ac. | N89°05'07"E 140.12' | 60.22' | 60.00' | **18** 7,500 s.f. 0.17 ac. | N89°05'07"E 124.58' | 60.03' | 60.00' | S89°05'07"W 118.11'

60.00' | **51** 8,437 s.f. 0.19 ac. | N89°05'07"E 140.35' | 60.22' | 60.00' | **17** 7,537 s.f. 0.17 ac. | N89°05'07"E 127.33' | 60.93' | 60.00' | N00°54'53"W 136.65' | 23.34' | 19.77' | 23.37'

60.00' | **52** 8,318 s.f. 0.19 ac. | N89°05'07"E 136.55' | 28.35' | 31.76' | 60.00' | **16** 7,770 s.f. 0.18 ac. | N89°05'07"E 131.65' | 9.14' | 60.18' | 60.00' | 67.75' | 7.91' | S89°05'07"W 118.11' | 23.34' | 23.76' | 36.45'

60.00' | **53** 8,064 s.f. 0.19 ac. | N89°05'07"E 132.24' | 60.16' | 60.00' | **15** 8,029 s.f. 0.18 ac. | N89°05'07"E 135.97' | 60.16' | 60.00' | 179.92' | S84°22'48"W 114.48' | Δ=129°50'05" R=20.00' L=45.32' | 43.07' | 15.84' | 60.00' | 60.00' | 60.00' | 60.00' | 60.00' | 60.00' | 60.00' | 60.00' | 60.00' | 60.00' | 60.00