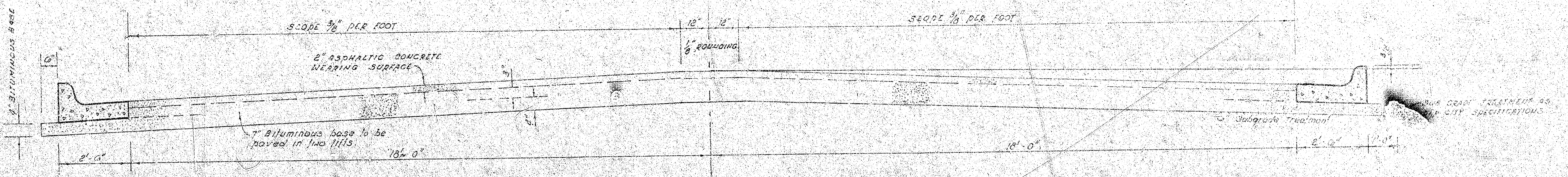
SLOPE 3/8" PER FOOT
12"
12"
1/8" ROUNDING
SLOPE 3/8" PER FOOT
2" ASPHALTIC CONCRETE WEARING SURFACE
9" BITUMINOUS BASE
6"
3"
2"
7" Bituminous base to be paved in two lifts.
2'-6"
18'-0"
18'-0"
Subgrade Treatment
Sub Grade Treatment as per City Specifications
2'-6"
1'-0"

TYPICAL SECTION

41' ASPHALTIC CONCRETE PAVEMENT WITH BITUMINOUS BASE

A TACK COAT OF EMULSIFIED ASPHALT (SS-1H) SHALL BE APPLIED AT AN APPROXIMATE RATE 0.05 GALLONS PER SQ YD BETWEEN LIFTS OF ASPHALTIC MATERIALS WHEN ORDERED BY THE ENGINEER. TACK COAT WILL NOT BE PAID FOR DIRECTLY AND SHALL BE CONSIDERED AS SUBSIDIARY TO PRICE BID FOR ASPHALTIC PAVEMENT.

BITUMINOUS BASE AND ASPHALTIC CONCRETE WEARING SURFACE SHALL BE PLACED WITH A LAYDOWN MACHINE HAVING AUTOMATIC ELECTRONIC CONTROLS FOR CROWN AND GRADE. CONSTRUCTION JOINTS IN EACH LIFT SHALL BE STAGGERED A MINIMUM DISTANCE OF 1' WITH JOINTS IN PRECEDING LIFTS AND SUCH THAT A JOINT WILL BE CONSTRUCTED ON THE PAVEMENT CENTERLINE IN THE TOP LIFT.

The A.C. pavement between the comb curb & gutter shall be paid as sq yds. 9" A.C. pavement (7" Bituminous Base) the Bituminous base under the comb curb & gutter shall be paid as sq yds 9" Bituminous Base.

COMBINED CURB & GUTTER

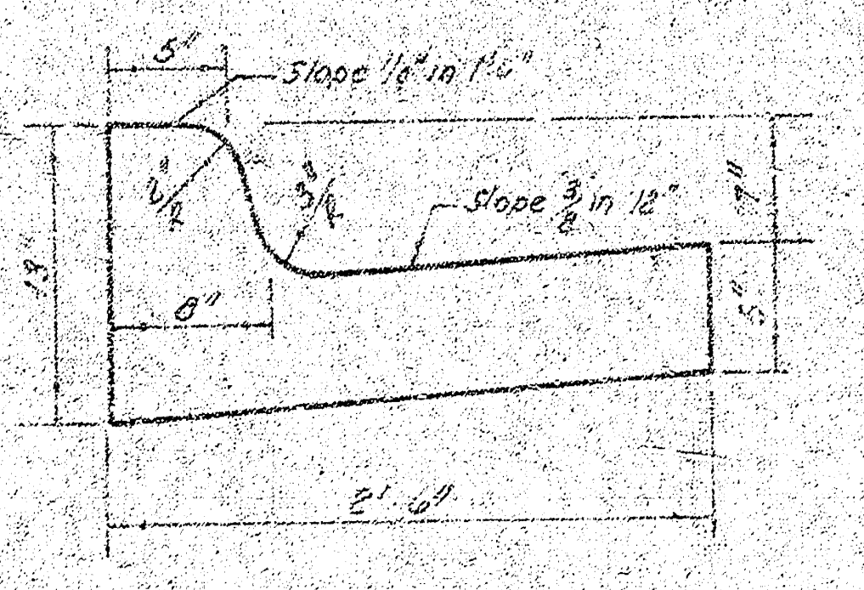
5"
Slope 1/8" in 1'-6"
1/2"
3/4"
Slope 3/8" in 12"
8"
13"
7"
6"
2'-6"

ROLL TYPE CURB & GUTTER

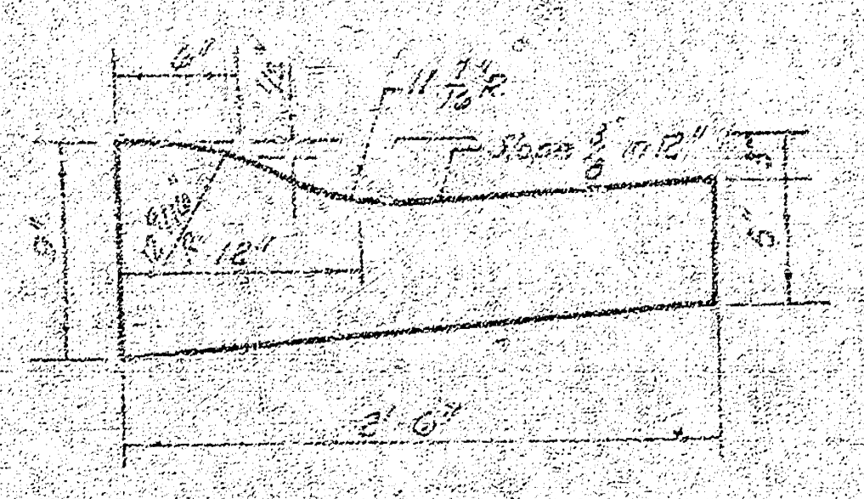
4"
11 7/16" R.
Slope 3/8" in 12"
12"
9"
6"
2'-6"

DETAIL OF TRANSVERSE CONSTRUCTION JOINTS

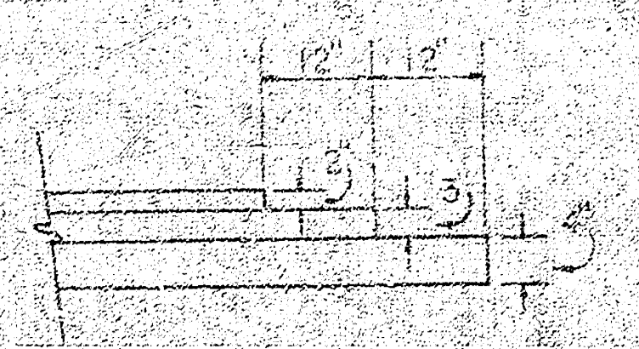

TRANSVERSE CONSTRUCTION JOINTS SHALL BE CONSTRUCTED IN FLEXIBLE BASE PAVEMENTS AT LOCATIONS WHERE PAVEMENT TEMPORARILY ENDS TO FACILITATE FUTURE PAVEMENT CONSTRUCTION AS SHOWN BY DETAIL. THE COST OF CONSTRUCTING THE TRANSVERSE CONSTRUCTION JOINTS SHALL NOT BE MEASURED OR PAID FOR DIRECTLY BUT SHALL BE INCLUDED IN THE BID PRICE FOR SQUARE YARDS OF ASPHALTIC CONCRETE PAVEMENT.

DUGAN ROAD.
S.L. IRVING TO S.L. KELLOGG.
CITY OF WICHITA, KANSAS

DEPARTMENT of PUBLIC WORKS - Engineering Division.
R. W. LINN CITY ENGINEER
DATE Proj. No. DAKS 574131.
1/2

FILMED FROM THE BEST AVAILABLE COPY

B.M. = 121·65 - CITY STD. CTR. U.S. 54 PAVEMENTS AND 44' WEST OF ℄ DUGAN ROAD.
B.M. = 120·60 - R.R. SPIKE EAST FACE POWER POLE S.W. COR. DUGAN AND IRVING.

SURVEYED: KRUG. BK: 156 & 166.
DRAWN: I. BUTTERFIELD.
CHECKED.

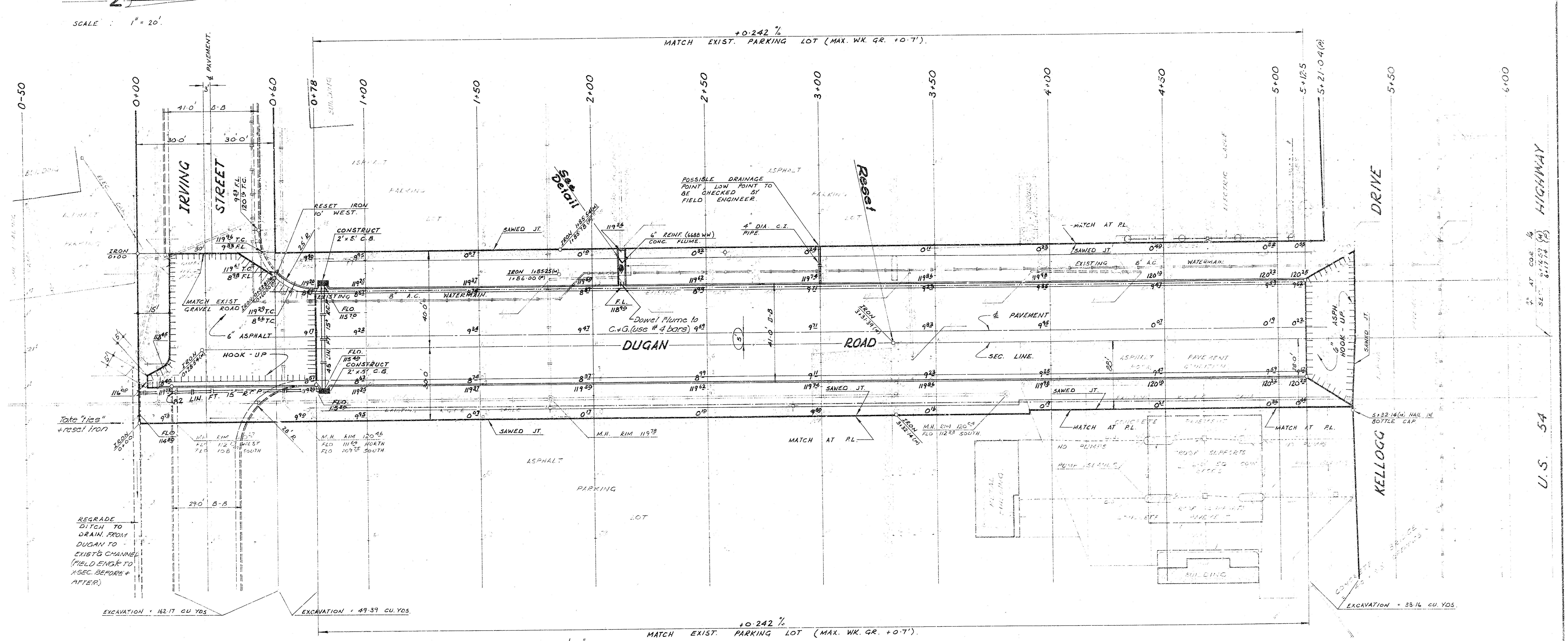
Z
SCALE : 1" = 20'.
+0·242 %
MATCH EXIST. PARKING LOT (MAX. WK. GR. +0·7').
0-50
0+00
0+60
0+78
1+00
1+50
2+00
2+50
3+00
3+50
4+00
4+50
5+00
5+12.5
5+21·04 (P)
5+50
6+00
℄ PAVEMENT.
41·0' B-B
30·0'
30·0'
IRVING STREET
9⁵³ F.L.
120¹⁶ T.C.
IRON 0+00
119⁹⁶ T.C.
9³³ F.L.
119⁶¹ T.C.
8⁹⁸ F.L.
119²⁹ T.C.
8⁶⁶ T.C.
MATCH EXIST GRAVEL ROAD
6" ASPHALT
HOOK - UP
15'
5'
118⁴⁵
116⁰⁰
IRON 0+28·54 (M)
82 LIN. FT. 15" R.C.P.
Take "ties" + reset iron
FLO 114⁸⁹
RESET IRON 10' WEST.
25' R.
28' R.
CONSTRUCT 2' x 5' C.B.
FLO. 115⁷⁰
FLO. 115⁴⁰
45 LIN. FT. 15" R.C.P.
FLO. 115⁸⁰
M.H. RIM 120⁴⁶
FLO 111⁶⁴ NORTH
FLO 109⁷⁵ SOUTH
EXISTING 8" A.C. WATERMAIN.
SAWED JT.
See Detail
IRON 1+85·54 (M) 1+85·78 (P)
IRON 1+85·25 (M) 1+86·00 (P)
6" REINF. (6688 WW) CONC. FLUME.
F.L. 118⁹⁰
Dowel Flume to C.+G. (use # 4 bars)
M.H. RIM 119⁷⁸
POSSIBLE DRAINAGE POINT, LOW POINT TO BE CHECKED BY FIELD ENGINEER.
4" DIA. C.I. PIPE.
Reset
IRON 3+31·39 (M)
IRON 3+32·14 (M)
M.H. RIM 120⁰⁴
FLO 112²³ SOUTH
DUGAN ROAD
SEC. LINE.
℄ PAVEMENT
MATCH AT P.L.
ASPHALT PARKING LOT
28·0'
ASPH. HOOK - UP
6"
5+32·14 (M) NAIL IN BOTTLE CAP
DRIVE
KELLOGG
HIGHWAY
U.S. 54
REGRADE DITCH TO DRAIN. FROM DUGAN TO EXIST'G CHANNEL (FIELD ENG'R TO X-SEC. BEFORE + AFTER)
29·0' B-B
EXCAVATION = 162·17 CU YDS
EXCAVATION = 49·39 CU. YDS.
EXCAVATION = 33·16 CU. YDS.

NOTE:
℄ IRVING IS 587·14' SOUTH OF "+" AT COR. ¼ SEC.

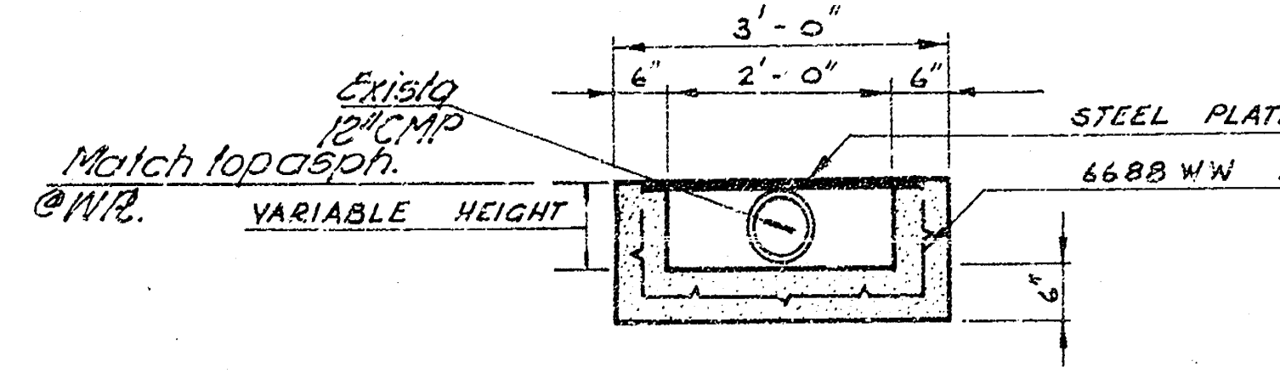
3'-0"
6"
2'-0"
6"
Existg 12" CMP
Match top asph. @ W.R.
VARIABLE HEIGHT
STEEL PLATE COVER.
6688 WW REINFORCING.
6"

SECTION THRU CONC. FLUME.

NOTE: STEEL PLATE COVER TO BE INCLUDED IN BID PRICE OF CONC. FLUME.

EARTHWORK QUANTITIES.

	PROPERTY.	CITY.
EXCAVATION	= 779·73 CU. YDS.	195·33 CU. YDS.
+10 %	= 77·97 CU. YDS.	19·53 CU. YDS.
TOTAL	= 857·70 CU. YDS.	214·86 CU. YDS.

☐ = REMOVAL.

DUGAN ROAD.

S.L. IRVING TO S.L. KELLOGG.
36-2-40 - ASPH. CONC.

CITY OF WICHITA, KANSAS.

R.W. LINN. CITY ENGINEER.
DATE : PROJ. NO. DAKS 574131.

FILMED FROM THE BEST AVAILABLE COPY