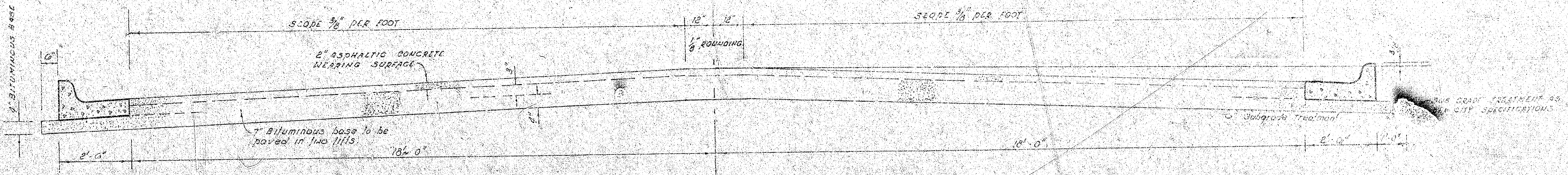
9" BITUMINOUS BASE
6"
SLOPE 3/8" PER FOOT
12" 12"
1/8" ROUNDING
2" ASPHALTIC CONCRETE WEARING SURFACE
3"
4"
7" Bituminous base to be paved in two lifts.
2'-6"
18'-0"
SLOPE 3/8" PER FOOT
SUB GRADE TREATMENT AS PER CITY SPECIFICATIONS
6" Subgrade Treatment
18'-0"
2'-6"
2'-0"

TYPICAL SECTION

41' ASPHALTIC CONCRETE PAVEMENT WITH BITUMINOUS BASE

A TACK COAT OF EMULSIFIED ASPHALT (SS-1H) SHALL BE APPLIED AT AN APPROXIMATE RATE 0.05 GALLONS PER SQ YD BETWEEN LIFTS OF ASPHALTIC MATERIALS WHEN ORDERED BY THE ENGINEER. TACK COAT WILL NOT BE PAID FOR DIRECTLY AND SHALL BE CONSIDERED AS SUBSIDIARY TO PRICE BID FOR ASPHALTIC PAVEMENT.

BITUMINOUS BASE AND ASPHALTIC CONCRETE WEARING SURFACE SHALL BE PLACED WITH A LAYDOWN MACHINE HAVING AUTOMATIC ELECTRONIC CONTROLS FOR CROWN AND GRADE. CONSTRUCTION JOINTS IN EACH LIFT SHALL BE STAGGERED A MINIMUM DISTANCE OF 1' WITH JOINTS IN PRECEDING LIFTS AND SUCH THAT A JOINT WILL BE CONSTRUCTED ON THE PAVEMENT CENTERLINE IN THE TOP LIFT.

COMBINED CURB & GUTTER

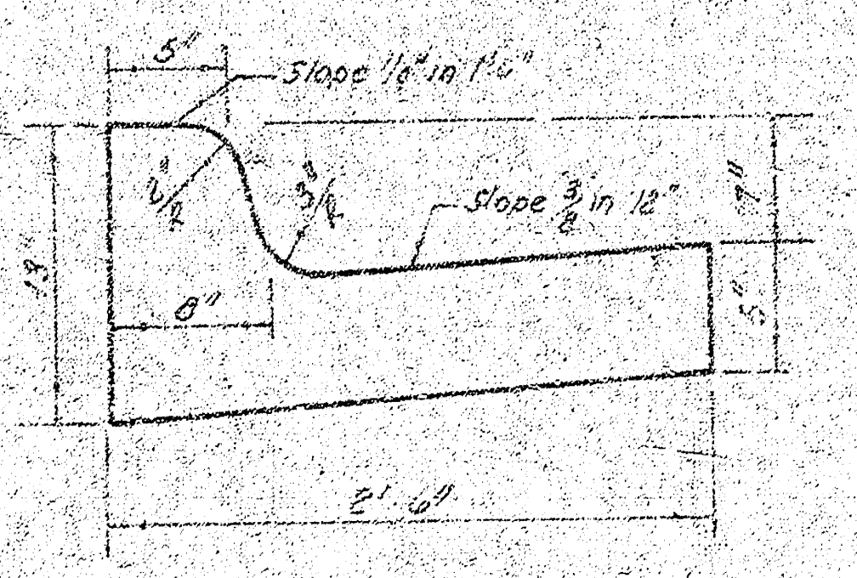
5"
Slope 1/16" in 1'-0"
2 1/2"
3 1/2"
Slope 3/8" in 12"
13"
8"
7"
5"
2'-6"

ROLL TYPE CURB & GUTTER

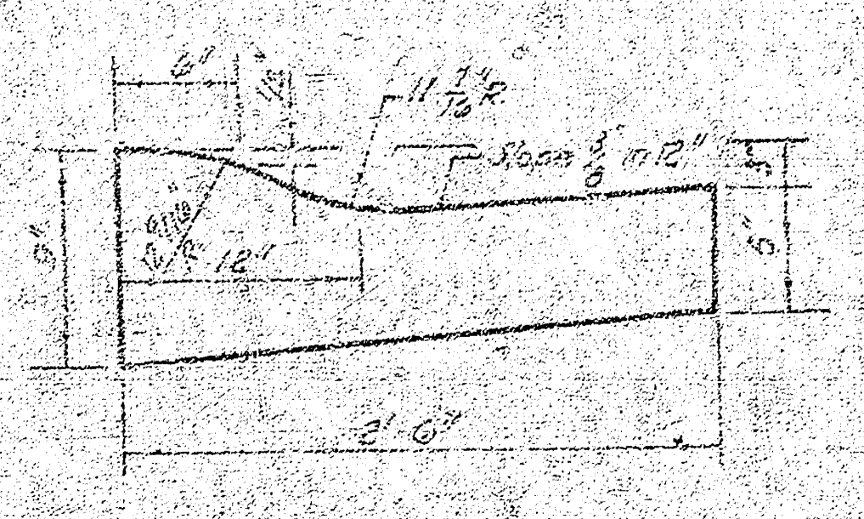
6"
11 7/16" R
Slope 3/8" in 12"
12"
5"
2'-6"

DETAIL OF TRANSVERSE CONSTRUCTION JOINTS

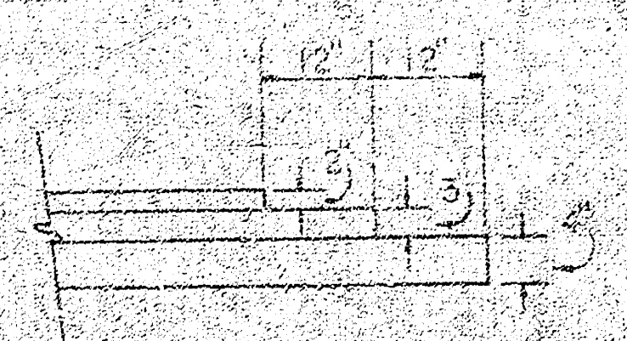

TRANSVERSE CONSTRUCTION JOINTS SHALL BE CONSTRUCTED IN FLEXIBLE BASE PAVEMENTS AT LOCATIONS WHERE PAVEMENT TEMPORARILY ENDS TO FACILITATE FUTURE PAVEMENT CONSTRUCTION AS SHOWN BY DETAIL. THE COST OF CONSTRUCTING THE TRANSVERSE CONSTRUCTION JOINTS SHALL NOT BE MEASURED OR PAID FOR DIRECTLY BUT SHALL BE INCLUDED IN THE BID PRICE FOR SQUARE YARDS OF ASPHALTIC CONCRETE PAVEMENT.

The A.C. pavement between the comb. curb & gutter shall be paid as sq yds. 9" A.C. pavement (7" Bituminous Base) & the Bituminous Base under the comb. curb & gutter shall be paid as sq yds 9" Bituminous Base.

DUGAN ROAD.
S.L. IRVING TO S.L. KELLOGG.
CITY OF WICHITA, KANSAS

DEPARTMENT of PUBLIC WORKS - Engineering Division.
R. W. LINN ______ CITY ENGINEER
DATE ______ Proj. No. DAKS 574131.
(1/2

FILMED FROM THE BEST AVAILABLE COPY

B.M. = 121·65 - CITY STD. CTR. U.S. 54 PAVEMENTS
AND 44' WEST OF ℄ DUGAN ROAD.
B.M. = 120·60 - R.R. SPIKE EAST FACE POWER
POLE S.W. COR. DUGAN AND IRVING.

SURVEYED: KRUG. BK. 156 & 186.
I. BUTTERFIELD.
CHECKED.

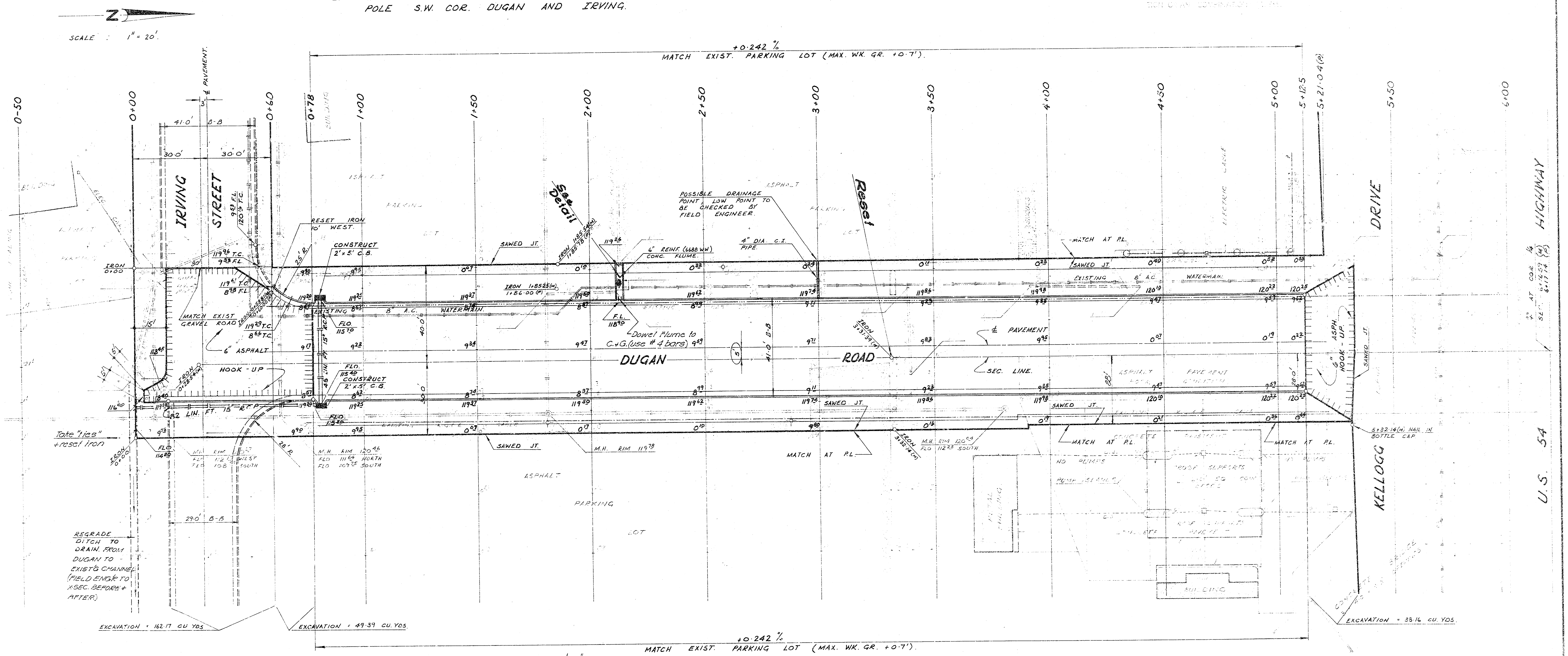
Z
SCALE : 1" = 20'.
0-50
0+00
0+60
0+78
1+00
1+50
2+00
2+50
3+00
3+50
4+00
4+50
5+00
5+12.5
5+21.04(P)
5+50
6+00
+0·242 %
MATCH EXIST. PARKING LOT (MAX. WK. GR. +0·7').
℄ PAVEMENT.
3'
41·0' B-B
30·0'
30·0'
IRVING STREET
9.53 F.L.
120.19 T.C.
BUILDING
ASPHALT
PARKING
LOT
RESET IRON 10' WEST.
CONSTRUCT 2'x5' C.B.
25' R.
30'
119.96 T.C.
9.33 F.L.
119.61 T.C.
8.98 F.L.
IRON 0+00
MATCH EXIST GRAVEL ROAD
119.29 T.C.
8.66 T.C.
IRON 0+58.81(M) 0+60.00(P)
6" ASPHALT
HOOK - UP
15'
5'
5'
118.45
116.60
IRON 0+28.54(M)
EXISTING 8" A.C. WATERMAIN.
FLO. 115.70
15" R.C.P.
45 LIN. FT.
FLO. 115.40
CONSTRUCT 2'x5' C.B.
82 LIN. FT. 15" R.C.P.
28' R
Take "ties" + reset iron
IRON 0+00
FLO 114.89
M.H. RIM 120.47 FLO 112.17 WEST FLO 108 SOUTH
M.H. RIM 120.46 FLO 111.64 NORTH FLO 109.75 SOUTH
29.0' B-B
REGRADE DITCH TO DRAIN FROM DUGAN TO EXIST'G CHANNEL (FIELD ENG'R TO XSEC. BEFORE & AFTER)
EXCAVATION = 162.17 CU. YDS.
EXCAVATION = 49.39 CU. YDS.
40·0'
See Detail
SAWED JT.
IRON 1+85.54(M) 1+85.78(P)
IRON 1+85.25(M) 1+86.00(P)
119.26
6" REINF. (6688 WW) CONC. FLUME.
F.L. 118.90
Dowel Flume to C.&G. (use #4 bars)
DUGAN ROAD
5'
41·0' B-B
M.H. RIM 119.78
POSSIBLE DRAINAGE POINT, LOW POINT TO BE CHECKED BY FIELD ENGINEER.
4" DIA. C.I. PIPE.
Reset
IRON 3+31.39(M)
IRON 3+32.14(M)
M.H. RIM 120.04 FLO 112.23 SOUTH
MATCH AT P.L.
℄ PAVEMENT
SEC. LINE.
ELECTRIC CABLE
MATCH AT P.L.
SAWED JT.
EXISTING 8" A.C. WATERMAIN.
28'
ASPHALT PAVEMENT
28.0'
6" ASPH. HOOK - UP.
SAWED JT.
5+32.14(M) NAIL IN BOTTLE CAP
CONCRETE PAVEMENT
NO PUMPS
ROOF SUPPORTS
PUMP ISLANDS
BUILDING
DRIVE
KELLOGG
4" AT COR. 1/4 SEC. 6+16.59 (M) 6+17.4 (P)
HIGHWAY
U.S. 54
EXCAVATION = 33.16 CU. YDS.
+0·242 %
MATCH EXIST. PARKING LOT (MAX. WK. GR. +0·7').

NOTE:
℄ IRVING IS 587·14' SOUTH OF "+" AT COR. 1/4 SEC.

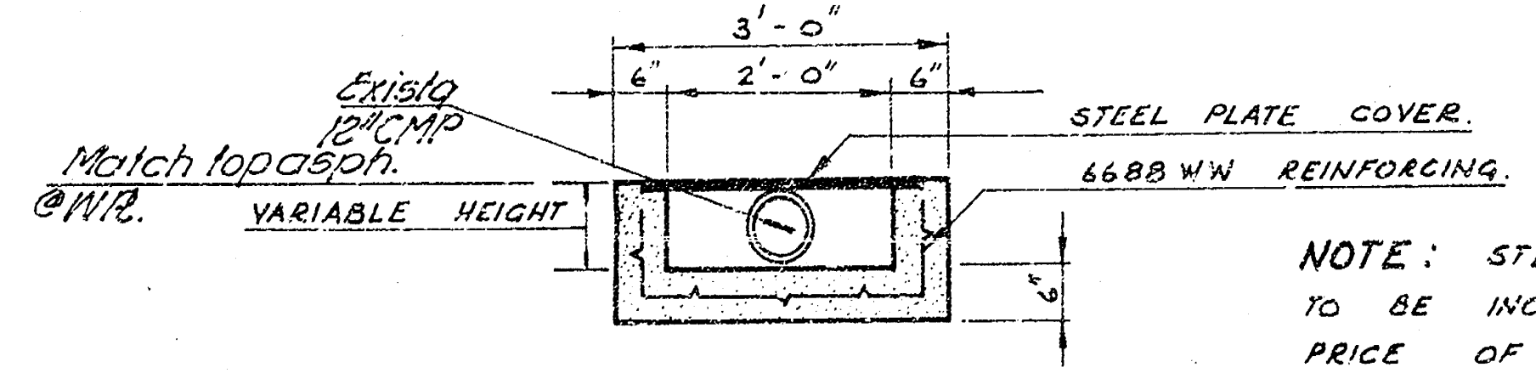
3'-0"
6"
2'-0"
6"
Existg 12" CMP
Match top asph. @W.R.
VARIABLE HEIGHT
STEEL PLATE COVER.
6688 WW REINFORCING.
6"

SECTION THRU
CONC. FLUME.

NOTE: STEEL PLATE COVER TO BE INCLUDED IN BID PRICE OF CONC. FLUME.

EARTHWORK QUANTITIES.

	PROPERTY.	CITY.
EXCAVATION	= 779·73 CU. YDS.	195·33 CU. YDS.
+10 %	= 77·97 CU. YDS.	19·53 CU. YDS.
TOTAL	= 857·70 CU. YDS.	214·86 CU. YDS.

☐ = REMOVAL.

DUGAN ROAD.

S.L. IRVING TO S.L. KELLOGG.
36-2-40 - ASPH. CONC.

CITY OF WICHITA, KANSAS.

R.W. LINN. CITY ENGINEER.
DATE : PROJ. NO. DAKS 574131.

FILMED FROM THE BEST