PARKING LOT IMPROVEMENTS FOR

CENTURY II EXHIBITION CENTER

PROJECT NUMBER

472-76-245-81501-000-000-001

INDEX

1. Title and Location Map
2. Parking Lot Details
3. Parking Lot Plan
4. Incidental Drainage
5. Type 1A Inlet Details
6. Drop Inlet Details
7. Parking Lot Lighting
8-9. Earthwork Cross Sections

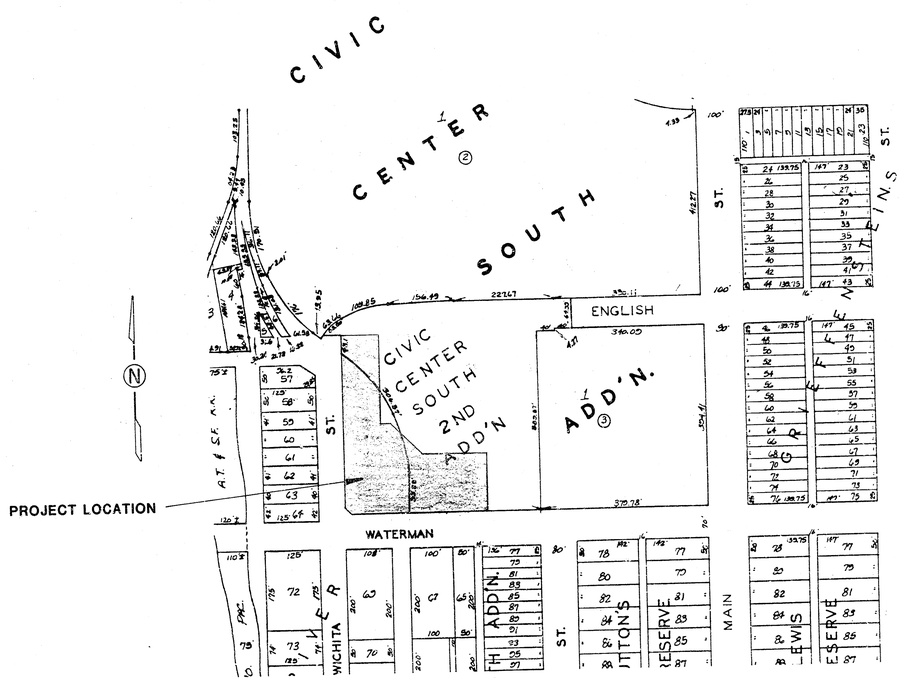

BENCH MARKS

B.M. 3/4" Iron pipe in thimble at West Side Water Street on Centerline Waterman. Elev. = 110.34

B.M. Headbolt between "Mueller" and "Chattanooga" on fire hydrant at Northwest Corner Wichita and Waterman. Elev. = 111.56

NOTE: CONTRACTOR WILL BE REQUIRED TO OBTAIN A PERMIT FROM CENTRAL INSPECTION DIVISION, DEPARTMENT OF HOUSING AND ECONOMIC DEVELOPMENT, PRIOR TO STARTING WORK ON PARKING LOT. CONTRACTOR WILL BE REQUIRED TO PAY THE NORMAL FEE CHARGED FOR SUCH PERMITS.

NOTE:

Site to be cleared of trailers, construction equipment, and materials by "others" prior to issuance of notice to proceed.

CITY OF WICHITA, KANSAS

MIKE E. LINDEBAK——CITY ENGINEER

SEPTEMBER 1985

BAUGHMAN COMPANY, P.A.
SURVEYING & ENGINEERING
316/262-7271 • 330 LAURA • WICHITA, KANSAS 67211

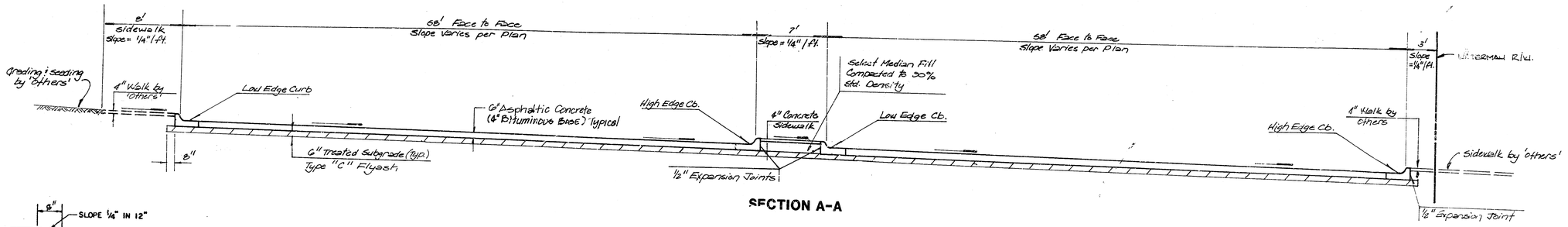

SECTION A-A

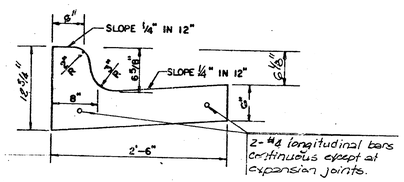

HIGH-EDGE CURB DETAIL

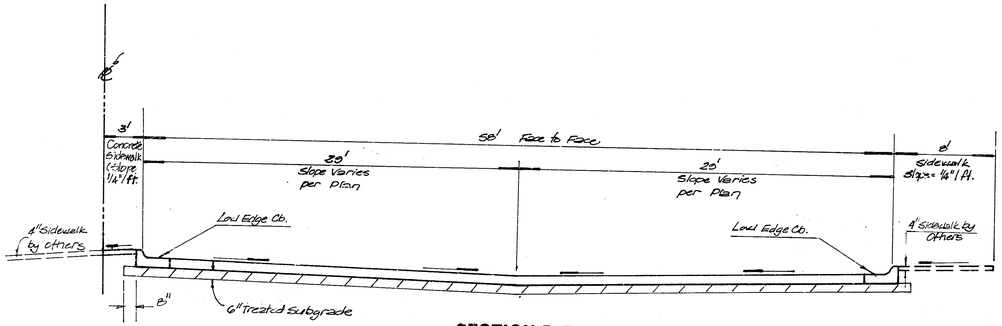

SECTION B-B

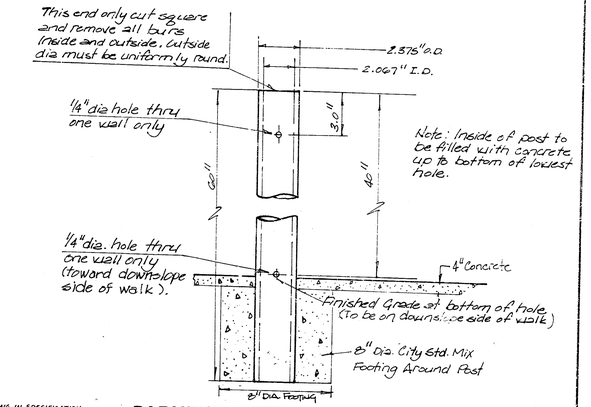

PARKING METER POST DETAIL

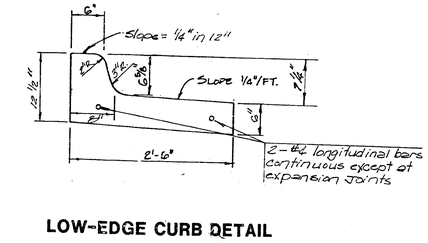

LOW-EDGE CURB DETAIL

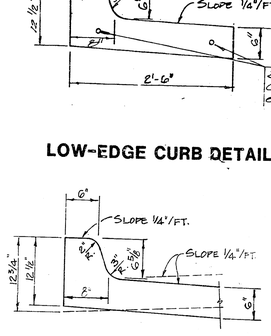

MONOLITHIC CURB DETAIL

NOTE:
ALL CURB & GUTTER TYPES (HIGH-EDGE, LOW-EDGE, AND TRANSITION) TO BE PAID AS L.F. COMBINED CURB & GUTTER (6 3/8")

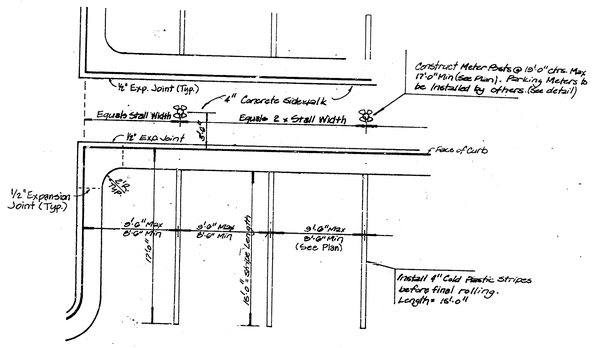

STRIPING AND PARKING METER DETAIL

TRANSVERSE CONSTRUCTION JOINTS

Note: A tack coat of emulsified asphalt (SC-1H or CSS-1H) shall be applied at an approximate rate of 0.05 gallons per square yard between each lift of asphaltic material. Joints in asphaltic lifts shall be staggered a distance of 1'-0" from joints in preceding lifts.

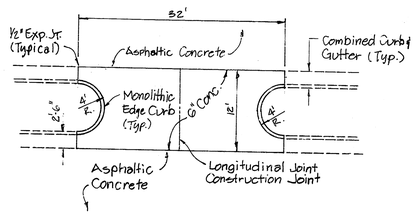

VALLEY GUTTER DETAIL

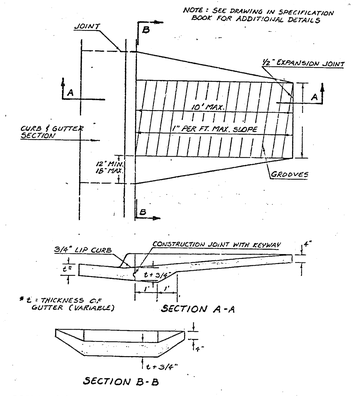

WHEELCHAIR RAMP DETAIL

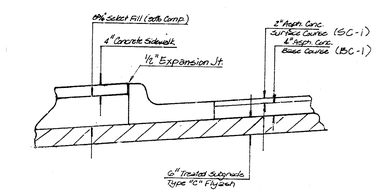

PAVEMENT AND SUBGRADE DETAIL AT CURB AND WALK

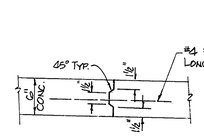

LONGITUDINAL CONSTRUCTION JOINT

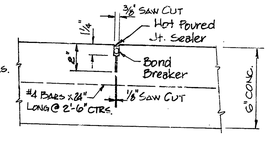

LONGITUDINAL SAWED JOINT

FOR CONCRETE VALLEY GUTTER

PARKING LOT DETAILS
CENTURY II EXHIBITION CENTER

CITY OF WICHITA, KS

472-76-245-81501-000-000-001

BAUGHMAN COMPANY, P.A.
SURVEYING & ENGINEERING
316/262-7271 • 330 LAURA • WICHITA, KANSAS 67211

2/3

BENCH MARK
TOP OF IRON IN THIMBLE @ W. SIDE WATER & & WATERMAN, ELEV. 1110.54

NOTE: BOTH SIDES OF NORTH DRIVEWAY ENTRANCE OFF WICHITA STREET TO PARKING LOT IS TO BE SIGNED "FIRE LANE NO PARKING" BY OTHERS .

CENTURY II EXHIBITION CENTER

ADJUST VALVE BOX (BY GAS SERVICE CO.)

RELOCATE POWER POLE & GUY (BY K.G.& E.)

REMOVE 42 L.F. CURB & GUTTER AND CONSTRUCT TEMPORARY HOOKUP (6" ASPHALT).

GRASS SEEDING (BY "OTHERS")

4" COLORED CONCRETE WALKS

CONSTRUCT 4" CONCRETE WALK BETWEEN PROP. LINE AND BACK OF CURB.

EXISTING RETAINING WALL

RELOCATE POWER POLE (BY K.G.& E.)

CONSTRUCT TEMPORARY HOOKUP W/ ASPHALT OVERLAY OVER EXIST. PAVEMENT (1½" AV.)

MATCH EXISTING PAVEMENT

TRANSITION FROM NO CURB TO FULL CURB IN 4' (TYPICAL 3 DRIVES ON WICHITA).

MATCH EXIST. PVM'T.

PROPOSED PAVEMENT & SIDEWALK BY "OTHERS".

CONSTRUCT 4" CONCRETE WALK FROM PROPERTY LINE TO BACK OF CURB

WICHITA

WATERMAN

GRADING AND SEEDING BY "OTHERS"

CONSTRUCT STD. 5' WHEELCHAIR RAMP.

4" COLORED CONCRETE WALKS

CONSTRUCT 4" CONC. WALK (TYP.)

CONSTRUCT 6" VALLEY GTR. W/ MONOLITHIC CURB (6" UNREINFORCED CONCRETE), TYPICAL 2 LOCATIONS

ABANDONED RAILROAD TRACK AND TIES TO BE REMOVED BY "OTHERS"

CONSTRUCT 4" CONCRETE WALK OVER SELECT FILL (TYPICAL).

SAW & REMOVE CURB & GUTTER AND ASPHALT SURFACE AS SHOWN. REPLACE ASPHALT AND MATCH & SAW CUT.

CONSTRUCT STORM SEWER (SEE SHEET 4).

CONSTRUCT 20' RADIUS ON GUTTER EDGE (TYPICAL). SEE DETAIL, SHT. 2

CONC. BOX TO BE REMOVED BY "OTHERS"

CONSTRUCT 6" A.C. PAVEMENT W/ CONCRETE COMBINED CURB & GUTTER (TYPICAL).

CURB & GUTTER AND PAVEMENT TO BE REMOVED AND REPLACED AND NEW DRIVE APPROACH (BY "OTHERS").

CONSTRUCTION LIMIT

PROPOSED PAVEMENT AND INLET (BY "OTHERS")

CONSTRUCT 4" CONCRETE WALK BETWEEN PROPERTY LINE & BACK OF CURB (TYP.)

NOTE: CONCRETE WALK INDICATED ON PLANS TO BE COLORED SHALL BE COLORED TO MATCH EXISTING BEIGE TONE SIDEWALK IN THE AREA OF THE EXHIBITION HALL. CONCRETE PRODUCER WILL BE REQUIRED TO MAKE TRIAL MIXES. FINAL APPROVAL FOR ACTUAL DESIGN MIX WILL BE THE ENGINEER'S DETERMINATION BASED ON ACTUAL RESULTS FROM TRIAL MIXES.

N

1" 20'

NOTES:

1. All dimensions to curbs are to face of curb unless otherwise noted.
2. Transition from high-edge to low-edge curb and gutter section to be constructed in 4' ± (typical). Transition section shall be located downslope from the point indicated on plan.
3. Area of railroad track to be removed is to be left unfilled by "others". Fill and compact elevated area to 90% std. density up to bottom of treated subgrade prior to subgrade manipulation.
4. Total number of parking spaces = 173.

EARTHWORK QUANTITIES		Compacted Fill (90% Std. Density)
Excavation	2075 C.Y.	124 C.Y.
+10%	208	+10% 12
	2283 C.Y.	136 C.Y.

	Compacted Fill (95% Std. Density)
Subgrade Stabilization Manipulation 5948 S.Y.	78 C.Y.
	+10% 8
	86 C.Y.

LEGEND

- PAVEMENT TO BE REMOVED
- TEMPORARY ASPHALT HOOKUP
- COLORED CONCRETE WALK
- H.E. HIGH-EDGE GUTTER SECTION (GUTTER SLOPES TOWARD CURB)
- L.E. LOW-EDGE GUTTER SECTION (GUTTER SLOPES AWAY FROM CURB)

PARKING LOT PLAN

PARKING LOT IMPROVEMENTS
CENTURY II EXHIBITION CENTER
CITY OF WICHITA, KANSAS
PROJECT NUMBER
472-76-245-81501-000-000-001

BAUGHMAN COMPANY, P.A.
SURVEYING & ENGINEERING
316/262-7271 • 330 LAURA • WICHITA, KANSAS 67211

3/9

3/9

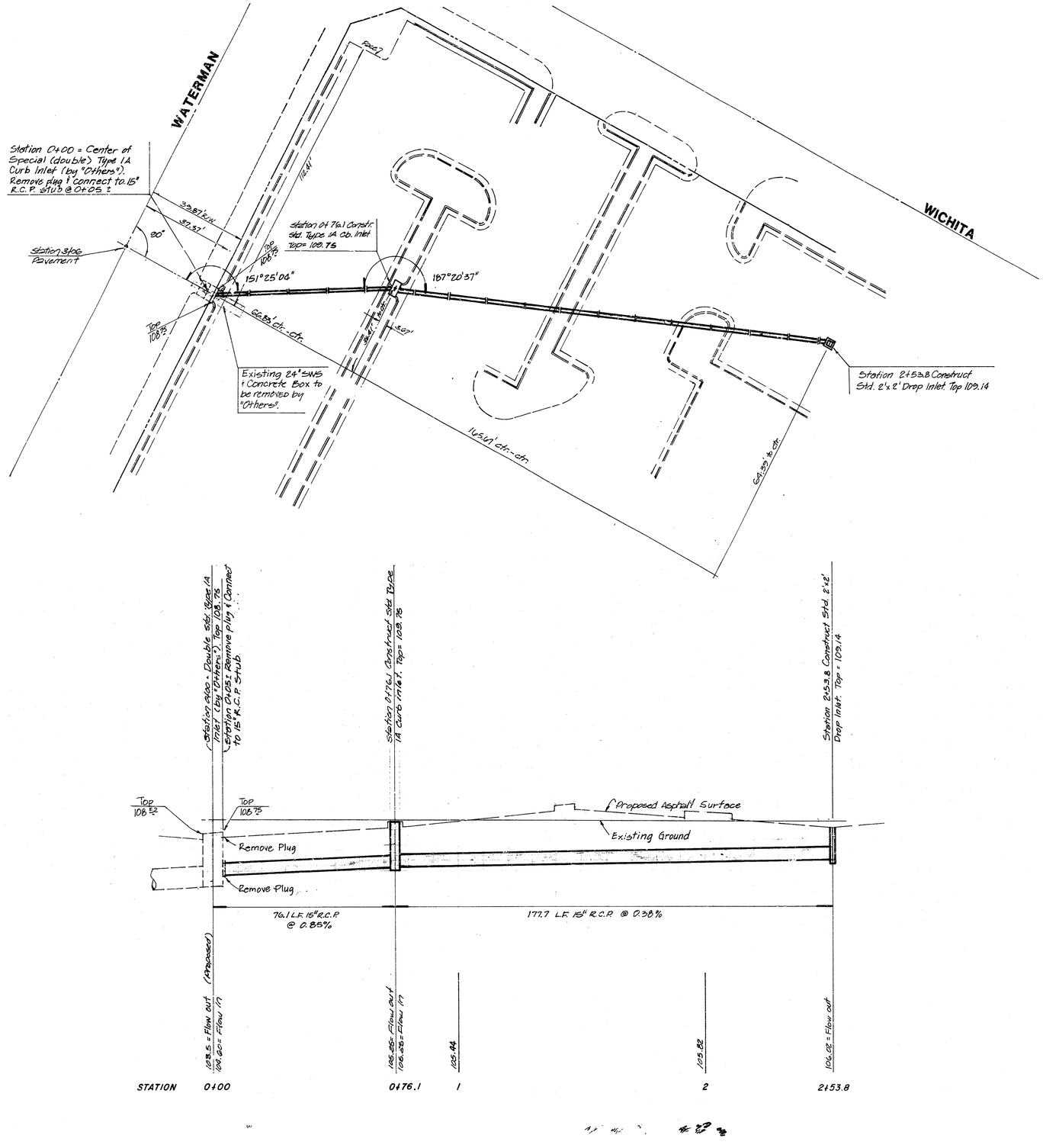

N

SCALE 1"=20' PLAN
1"=5' PROFILE

INCIDENTAL DRAINAGE
PARKING LOT IMPROVEMENTS CENTURY II
EXHIBITION CENTER

CITY OF WICHITA, KS

PROJECT NO.
472-76-245-81501-000-000-001

4/1

BAUGHMAN COMPANY, P.A.
SURVEYING & ENGINEERING
316/262-7271 • 330 LAURA • WICHITA, KANSAS 67211

4/5

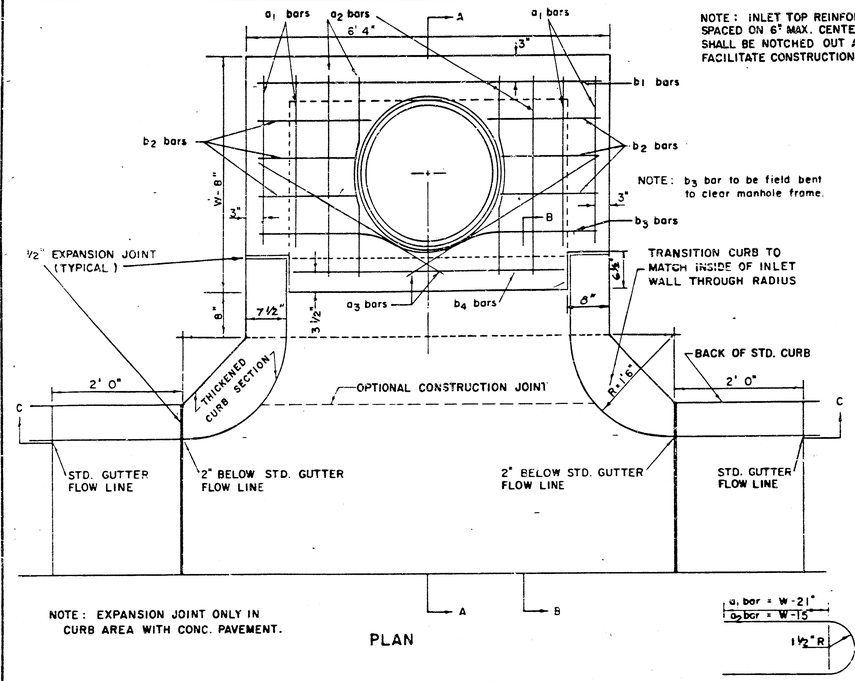

NOTE: EXPANSION JOINT ONLY IN CURB AREA WITH CONC. PAVEMENT.

PLAN

NOTE: INLET TOP REINFORCING SHALL BE SPACED ON 6" MAX. CENTERS. INLET LIDS SHALL BE NOTCHED OUT AS INDICATED TO FACILITATE CONSTRUCTION OF CURB.

NOTE: b_3 bar to be field bent to clear manhole frame.

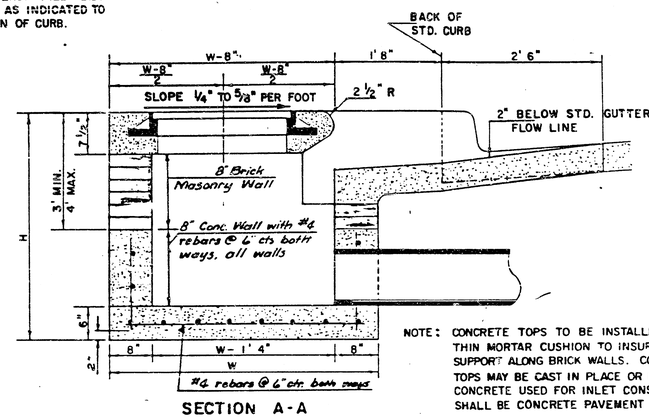

SECTION A-A

NOTE: CONCRETE TOPS TO BE INSTALLED ON THIN MORTAR CUSHION TO INSURE FULL SUPPORT ALONG BRICK WALLS. CONCRETE TOPS MAY BE CAST IN PLACE OR PRECAST. CONCRETE USED FOR INLET CONSTRUCTION SHALL BE CONCRETE PAVEMENT MIX.

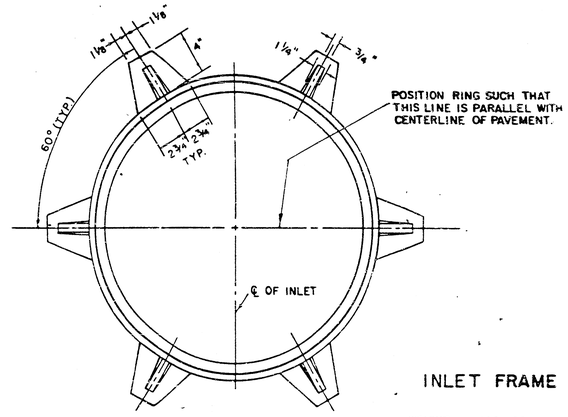

INLET FRAME

WEIGHT = 180 LBS.

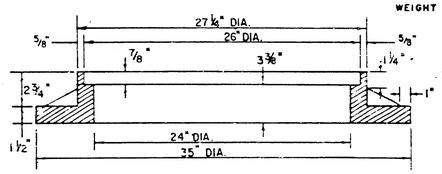

SEE CITY OF WICHITA STANDARD MANHOLE FRAME AND COVER DETAIL SHEET FOR COVER DETAILS TO BE USED WITH INLET FRAME.

BENDING DIAGRAM

NOTE: CONTRACTOR SHALL HAVE THE OPTION OF CONSTRUCTING 8" BRICK MASONRY WALLS BETWEEN THE CONCRETE INLET BASE AND TOP ON THIS INLET WHEN W = 6'4" AND H = 7'0" OR LESS.

ADDITIONAL CURB AND GUTTER CONSTRUCTION NECESSARY TO CONNECT SET-BACK INLET TO PAVEMENT WILL BE PAID FOR AT THE UNIT PRICE BID FOR EACH INLET HOOKUP.

INLET INVERT SHALL BE SHAPED WITH 8 SACK SAND MIX CONCRETE TO CREATE FLOW CHANNELS AND TO INCREASE HYDRAULIC EFFICIENCY SUCH THAT THE INLET WILL BE SELF CLEANING BETWEEN ALL INLET AND/OR OUTLET PIPES.

THE ENDS OF ALL PIPES INSTALLED IN INLETS SHALL BE CUT OFF FLUSH WITH THE INSIDE FACE OF THE INLET WALL.

STEEL SCHEDULE

BAR		a_1	a_2	a_3*	b W=4'4"	b W=5'4"	b W=6'4"	b W=7'4"	b W=8'4"	b_2	b_3	b_4	WT. LBS.
NUMBER		4	4	2	1	3	5	7	9	6	1	1	
SIZE		#4	#4	#4	#4	#4	#4	#4	#4	#4	#4	#6	
LENGTH	W=4'4"	5'7"	6'7"	4'0"	6'1"	–	–	–	–	1'9"	6'2"	4'8"	60±
	W=5'4"	7'7"	8'7"	5'0"	–	6'1"	–	–	–	1'9"	6'2"	4'8"	81±
	W=6'4"	9'7"	10'7"	6'0"	–	–	6'1"	–	–	1'9"	6'2"	4'8"	101±
	W=7'4"	11'7"	12'7"	7'0"	–	–	–	6'1"	–	1'9"	6'2"	4'8"	121±
	W=8'4"	13'7"	14'7"	8'0"	–	–	–	–	6'1"	1'9"	6'2"	4'8"	141±

* NOTE: a_3 BARS TO BE PLACED APPROX. 2" BELOW TOP OF INLET COVER

STANDARD CURB INLET PRECAST TOPS			
W	PRE-CAST TOP SIZE	PIPE SIZE	CU. YD. CONC.
4' 4"	3'8"x 6'4" x7 1/2"	21" & SMALLER	0.38 ±
5' 4"	4'8"x 6'4" x7 1/2"	24" & 30"	0.51 ±
6' 4"	5'8"x 6'4" x7 1/2"	36" & 42"	0.64 ±
7' 4"	6'8"x 6'4" x7 1/2"	48" & 54"	0.77 ±
8' 4"	7'8"x 6'4" x7 1/2"	60" & 66"	0.90 ±

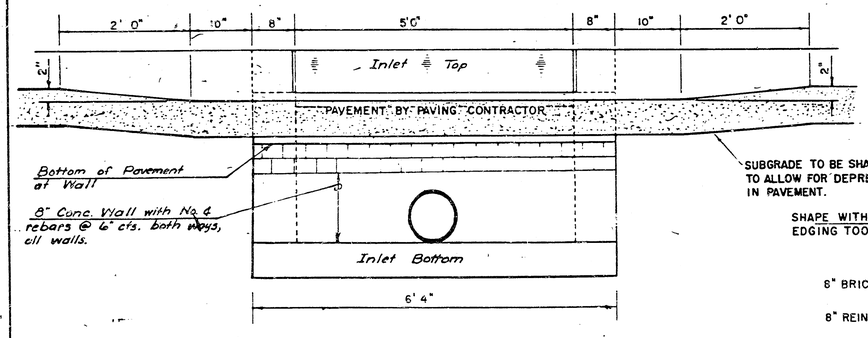

SECTION C - C

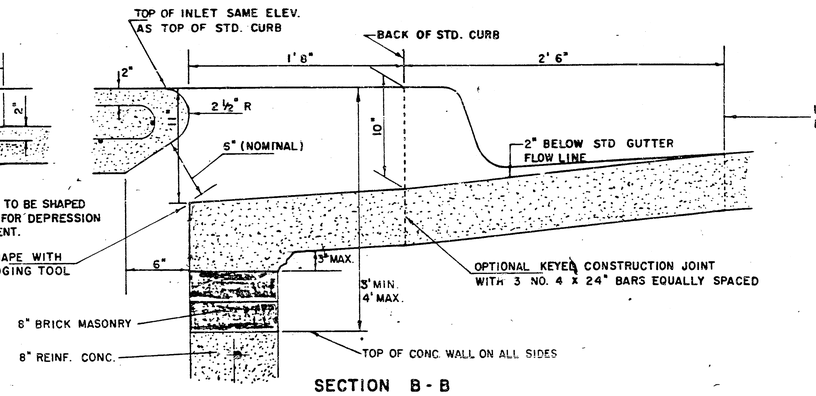

SECTION B - B

REVISED 12-21-1984

DETAIL STANDARD TYPE IA CURB INLET

CITY OF WICHITA, KANSAS

INLET OPENING = 6" x 5' 0"

5/9

(5/13)

Proj. no. 472-76-245-81501-000-000-001

NOTE: Grates shall be imprinted on the top surface with "CITY OF WICHITA" using letters at least 1" in height. Other marking methods may be used only if approved by the engineer.

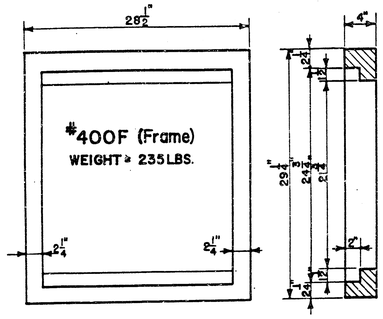

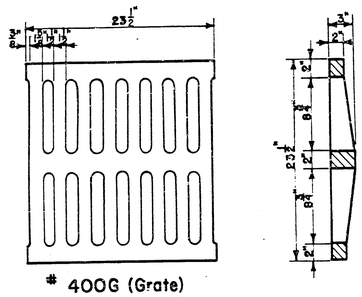

24"x24" Frame & Grate Detail

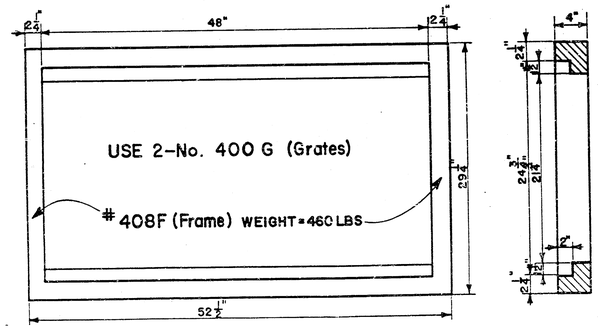

Double 24"x24" Frame Detail

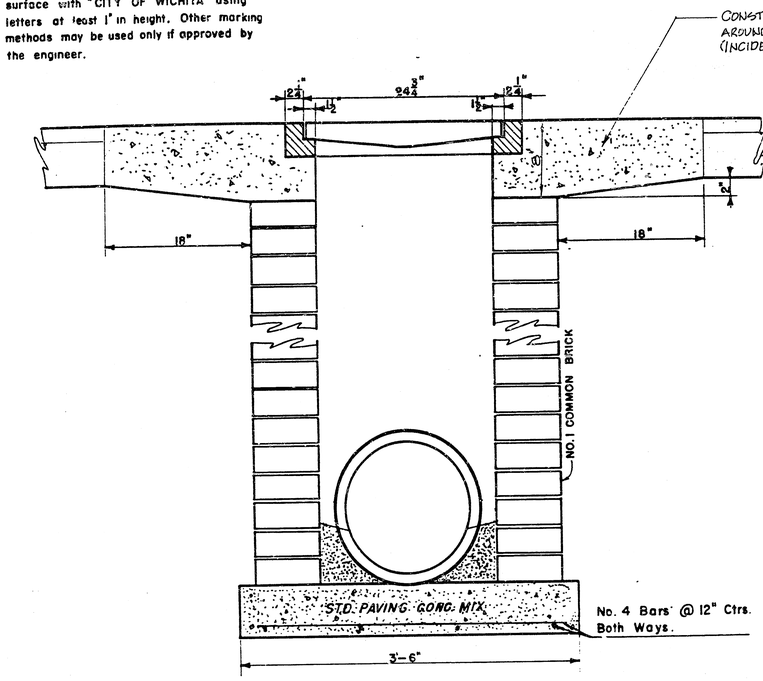

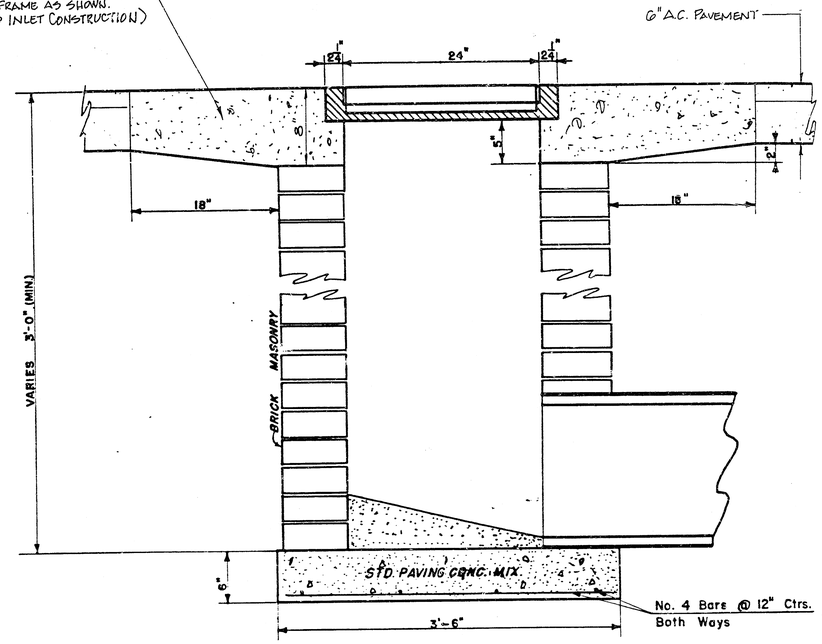

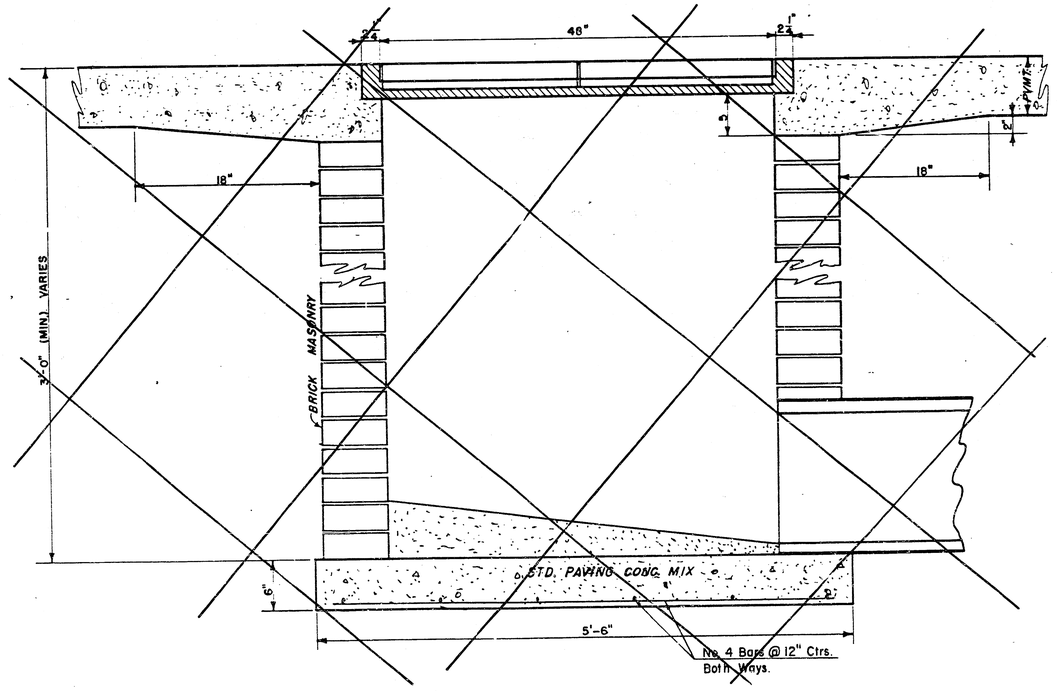

DROP INLET DETAILS

M.E. Lindebak, City Engineer
City of Wichita, Kansas
Project # 472-76-245-81501-000-000-001
Project
Date: 6/9 (6/9)
Scale: 1-1/2" = 1'-0"

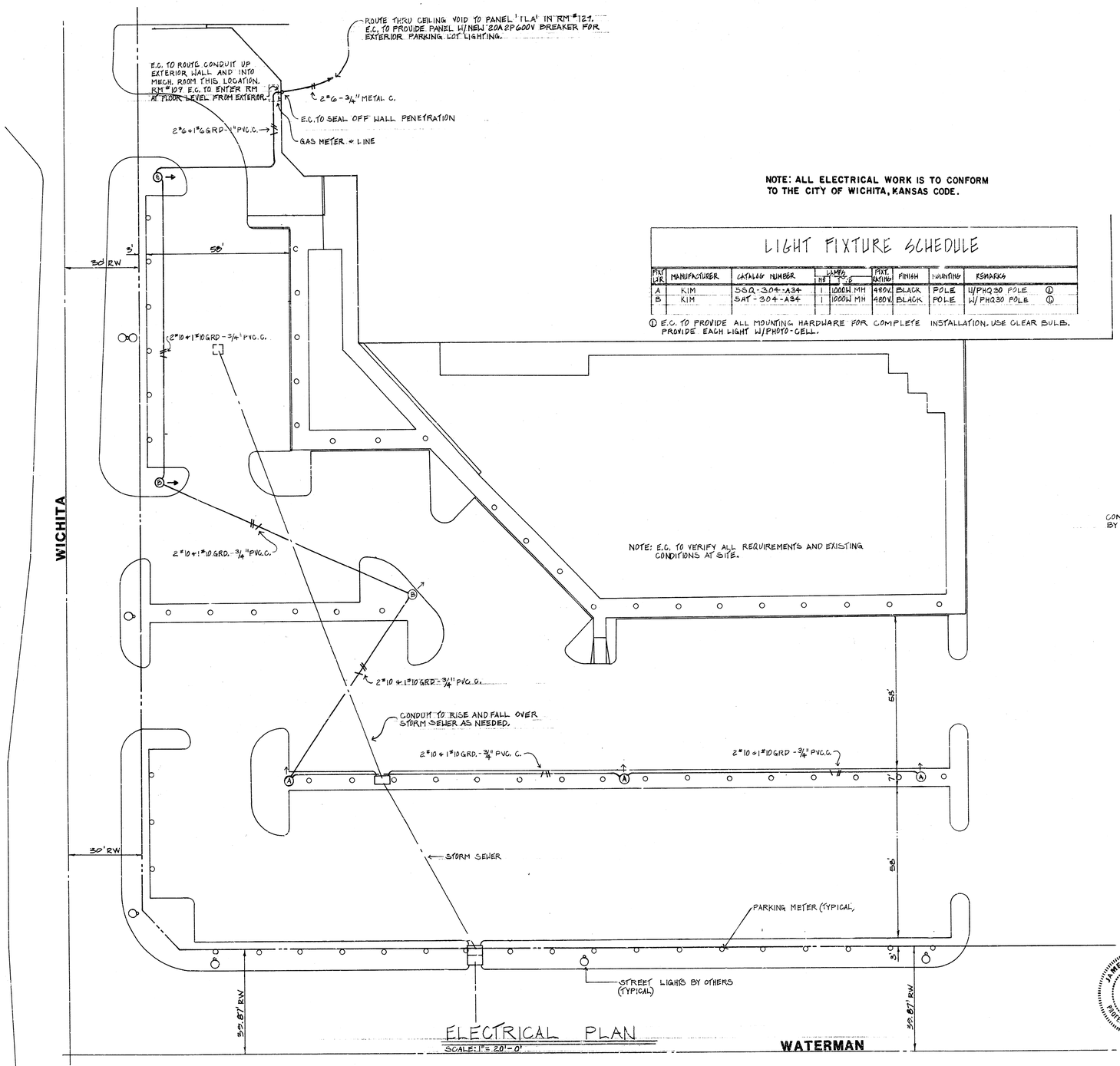

ELECTRICAL PLAN

SCALE: 1" = 20'-0"

NOTE: ALL ELECTRICAL WORK IS TO CONFORM TO THE CITY OF WICHITA, KANSAS CODE.

LIGHT FIXTURE SCHEDULE

FIXT. TYP.	MANUFACTURER	CATALOG NUMBER	LAMPS NO.	LAMPS T-S	FIXT. RATING	FINISH	MOUNTING	REMARKS
A	KIM	56Q-304-A34	1	1000W MH	480V.	BLACK	POLE	W/PH230 POLE ①
B	KIM	54T-304-A34	1	1000W MH	480V.	BLACK	POLE	W/PH230 POLE ①

① E.C. TO PROVIDE ALL MOUNTING HARDWARE FOR COMPLETE INSTALLATION. USE CLEAR BULB. PROVIDE EACH LIGHT W/PHOTO-CELL.

GENERAL NOTES:

1. ANCHOR BOLTS SHALL BE SET WITH TEMPLATE.
2. POLES SHALL BE PLUM ON TWO VERTICAL PLANES 90° APART.
3. CONCRETE SHALL BE TAMPED.
4. E.C. TO PROVIDE GROUND ROD CLAMPS AND HARDWARE FOR PROPER POLE GROUNDING.
5. E.C. TO USE STEEL ELLS & RISERS ON ALL CONDUIT RUNS.
6. ALL CONDUIT TO BE RUN UNDERGROUND 2'-6" UNLESS NOTED OTHERWISE.
7. CONCRETE, REFERENCE STANDARD CITY CONCRETE SPEC.
8. ALL EXPOSED CONDUIT TO BE PAINTED TO MATCH SURROUNDINGS.

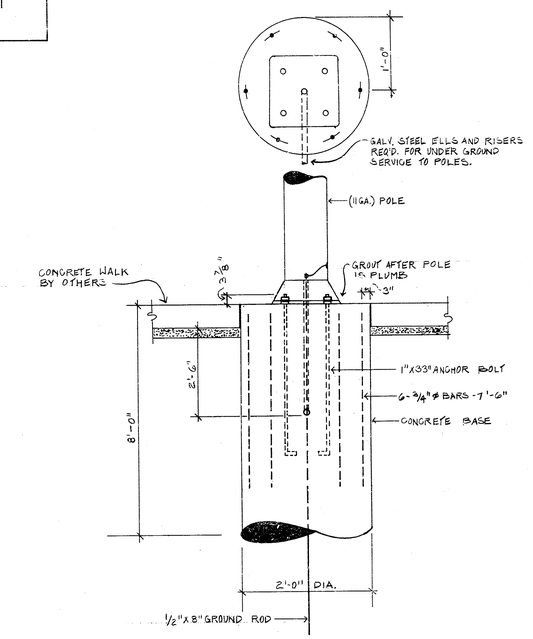

NOTE: E.C. TO VERIFY ALL MOUNTING REQUIREMENTS W/POLE MANUFACTURER.

POLE MOUNTING DETAIL

N.S.

JAMES L. MARTIN LICENSED 6203 KANSAS PROFESSIONAL ENGINEER

WATERMAN

PARKING LOT LIGHTING
CENTURY II EXHIBITION CENTER

CITY OF WICHITA, KS

472-76-245-81501-000-000-001

BAUGHMAN COMPANY, P.A.
SURVEYING & ENGINEERING
316 262-7271 • 330 LAURA • WICHITA, KANSAS 67211

7/9

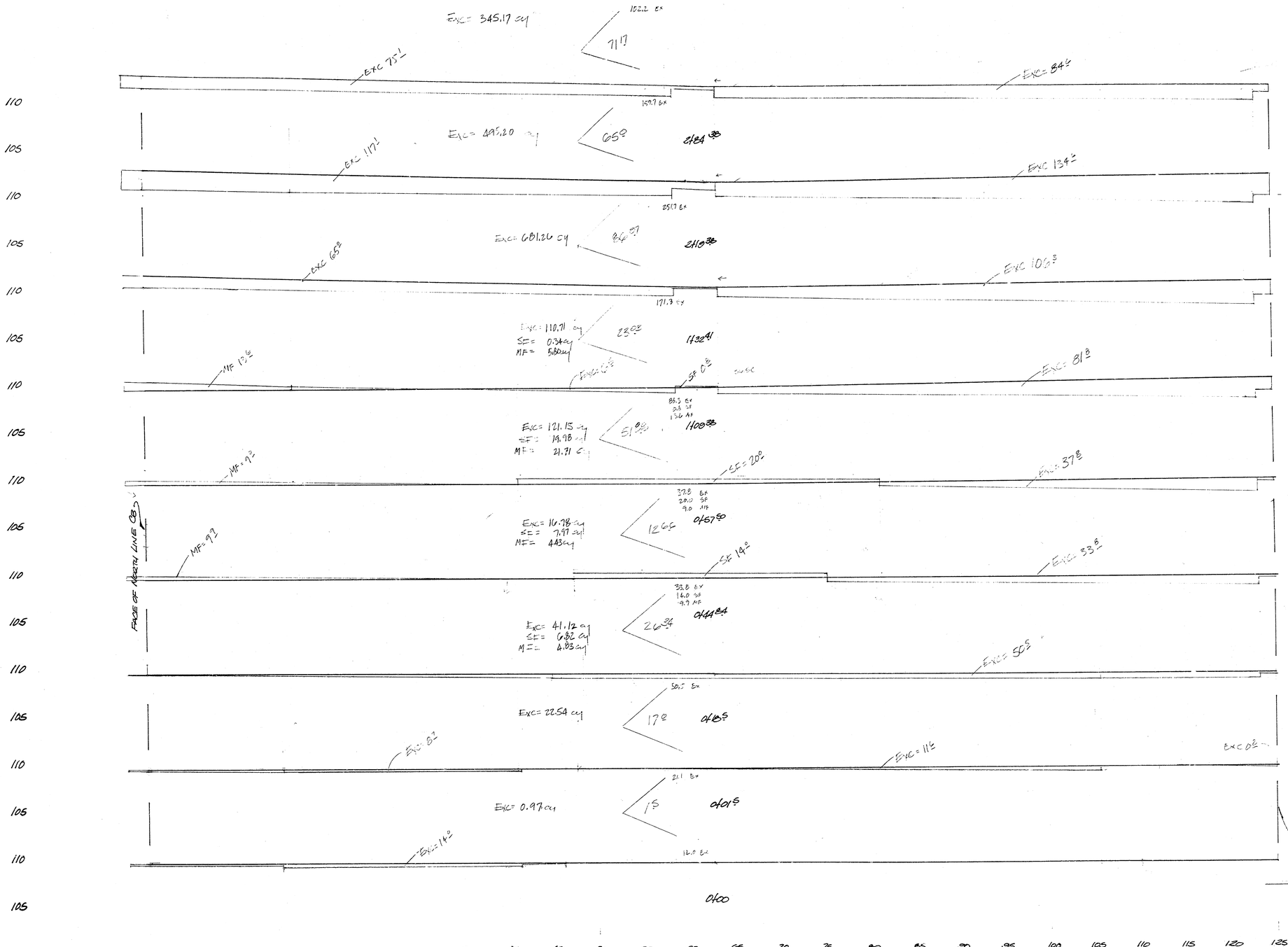

FACE TOTALS
[illegible]: 1834.90
SELECT FILL: 35.11 cy
MANIP. FILL: 36.77 cy

EARTHWORK TOTALS
EXC= 2075.35 cy
SELECT FILL = 86.36 cy
MANIP. FILL = 77.52 cy
COMP. FILL (90%): 124.25 cy

EARTHWORK
CENTURY II EXHIBITION CENTER
PARKING LOT IMPROVEMENTS
Proj. no. 472-76-245-81501-000-000-001

8/9

8/9

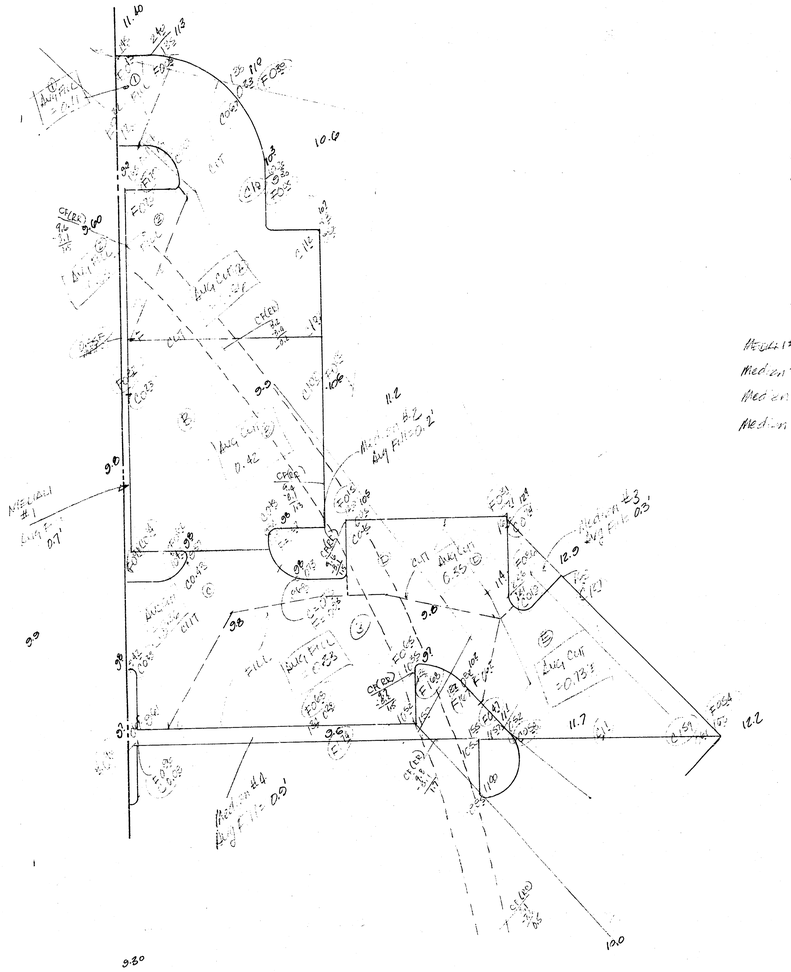

EXCAVATION

AREA A = 3016 ft² @ 0.56' Avg Cut = 1688.96 ft³
AREA B = 3999.5 ft² @ 0.42' Avg Cut = 1679.79 ft³
AREA C = 1560 ft² @ 0.26' Avg Cut = 405.60 ft³
AREA D = 1792 ft² @ 0.25' Avg Cut = 452.20 ft³
AREA E = 2126 ft² @ 0.73 Avg Cut = 1553.44 ft³

TOTAL = 5779.99 ft³
= 214.07 cy yds.

MANIPULATED FILL (95% STD. DENSITY)

AREA ① = 312 ft² @ 0.11' Fill = 34.32 ft³
AREA ② = 399 ft² @ 0.23' Fill = 91.77 ft³
AREA ③ = [illegible] ft² @ 0.33' Fill = [illegible]

TOTAL = 1100.25 ft³
= 40.75 cy yds

SELECT MEDIAN FILL (90% STD. DENSITY)

Median #1: Area = 578 ft² @ 0.7' Avg Fill = 404.6 ft³
Median #2: Area = 360 ft² @ 0.2' Avg Fill = 72.0 ft³
Median #3: Area = 300 ft² @ 0.3' Avg Fill = 90.0 ft³
Median #4: Area = 900 ft² @ 0.9' Avg Fill = 810.2 ft³

TOTAL = 1383.8 ft³
= 51.25 cy yds

COMPACTED FILL (90%) IN R.R. EXCAVATION
(TO BE EXCAVATED 1.5' BELOW EXISTING GROUND BY 'OTHERS')

305' x 10' x 1.1' AVG. FILL = 3355 SF = 124.2 C.Y.

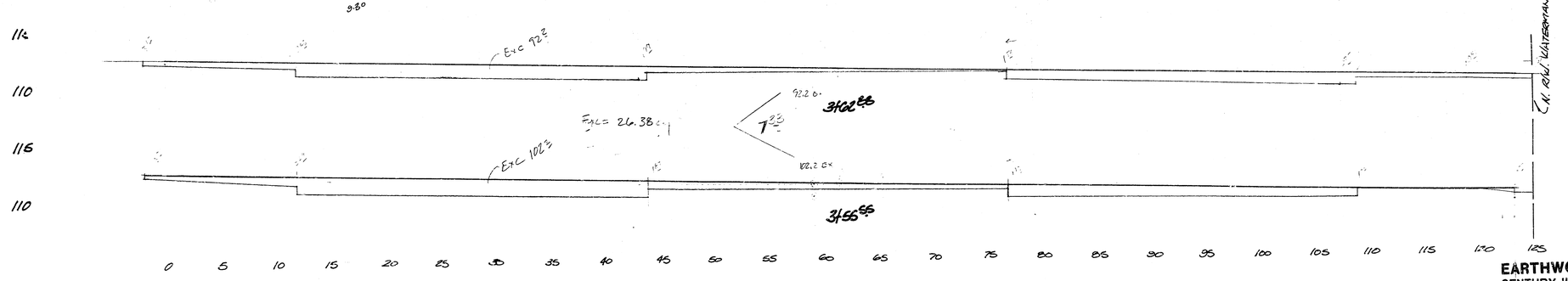

PAGE TOTALS
EXCAVATION: 240.45 cy
SELECT FILL: 51.25 cy
MANIP. FILL: 40.75
COMPACT. FILL (90%): 124.25 cy

EARTHWORK
CENTURY II EXHIBITION CENTER
PARKING LOT IMPROVEMENTS
Proj. no. 472-76-245-81501-000-000-001

9/9