STREET & STORM WATER IMPROVEMENTS TO

CARR AVENUE

Project Number

472-76-245-82433-000-000-001

Index Code

762344

CITY OF WICHITA, KANSAS

Michael E. Lindebak, City Engineer

DECEMBER, 1995

General Notes

1. Utility service lines, poles, valve boxes, meters, et cetera are to be adjusted as necessary by others prior to construction unless the plans specifically call for their adjustment by the Contractor or unless the plans specifically identify a utility to be adjusted by its owner during construction. Existing utilities and their location, as shown on the plans, represent the best information obtainable for design. The contractor will be required to work around existing utilities within the right-of-way which do not conflict with proposed construction.

2. Rubble from the removal of miscellaneous structures and excess excavation which is to be wasted shall be disposed of on sites to be provided by the Contractor. These sites shall be approved by the Engineer as to suitability, appearance and site location. Locations that, in the opinion of the Engineer, will leave an unsightly appearance will not be approved. All disposal sites must be approved by the Kansas Department of Health and Environment. Material either stockpiled or disposed of in a flood plain would require a Kansas State Board of Agriculture permit. Any material dumped in waters of the United States or wetlands is subject to U.S. Corps. of Engineers permitting regulations. Any material buried or stockpiled beyond approved construction limits would require additional archaeological investigations unless buried in a previously approved borrow location.

3. A saw cut of at least one-half the depth of existing surface courses or one-fourth the depth of the existing total pavement thickness shall be provided at locations where proposed construction abuts an existing surface course or pavement for which partial removal of that surface or pavement is required. Sawed joint to facilitate removal within three (3) feet of existing joints will not be permitted and for such instances the limits of removal shall extend to the existing joint. Such saw cuts will not be paid for directly and this cost shall be considered as subsidiary to the removal of the surface or pavement.

4. This project includes provisions for the construction of Ten (10) driveways.

5. Trees and shrubs in public right-of-way which are in direct conflict with proposed new construction shall be removed by the Contractor with the Engineer's approval. Trees and shrubs which are not in direct conflict with proposed new construction shall be saved and protected from damage.

6. Limits of earthwork shall match existing ground elevations at the right-of-way line unless otherwise noted on the plans with a new finished grade elevation. When a new finished grade elevation is shown, the earthwork shall extend one foot beyond the right-of-way line and then sloped up or down using permissible slopes to match the existing ground surface.

7. Contractor shall give property owners abutting this project, whose yards will be lower than the new finished grade elevations at the right-of-way line, an opportunity to utilize excess excavated material from the project to regrade their yards to drain to the new pavement. Contractor will be required to dump and spread the excess material as required by the specification when requested by the property owner. The Contractor shall ascertain that a dirt order form has been properly executed by the property owner before any such excess material is delivered to such properties.

8. The Contractor shall be responsible for preserving property irons. The Contractor will be required to re-establish any property irons which are damaged or destroyed by his construction operations. Such irons shall be re-established by a licensed land surveyor in accordance with state laws.

9. The Contractor shall adjust Water Valve Boxes and Fire Hydrants as directed by the Engineer at the price bid for said adjustments. The Water Department shall field locate water valves one time during construction when requested by the Contractor. It shall be the Contractor's responsibility to preserve such field locations during the construction process. Water valves, water valve boxes or fire hydrants damaged during construction shall be repaired by the contractor at his own expense.

10. All areas disturbed by construction shall be seeded with "FESCUE" immediately following construction in that area at a rate of 350 lbs/acre.

11. Contractor will be required to provide notice to utility companies a minimum of twenty-four (24) hours prior to any excavation, as follows:

Kansas One-Call	687-2470

The Contractor must notify the following in case of an emergency:

Cablevision	262-4270
or	263-2061
K.P.L. Gas Service Company	263-7511
Kansas Gas & Electric Company	264-1141
Arkla Gas Company	942-8350
or	263-8161
Southwestern Bell Telephone Company	1-571-2611
City of Wichita Water Department	268-4908
City of Wichita Sewer Maintenance	268-4071

12. The Contractor shall give all property owners and/or tenants of developed property abutting the project limits a minimum of ten (10) days advance notice prior to start of construction.

13. Mailb[illegible] within the limits of the project shall be removed and replaced by t[illegible] contractor as approved by the Engineer. Contractor will be requi[illegible] make satisfactory provisions for mail delivery to properties aff[illegible] this project during its construction.

14. Traffic shall not be carried through construction on this project. Contractor shall contact affected property owners along Carr Lane so appropriate arrangements can be made during construction.

LINEAR FEET OF PAVING PROJECT = **663.7 L.F.**
EXCAVATION = **1182 CU.YDS**
BORROW = 0

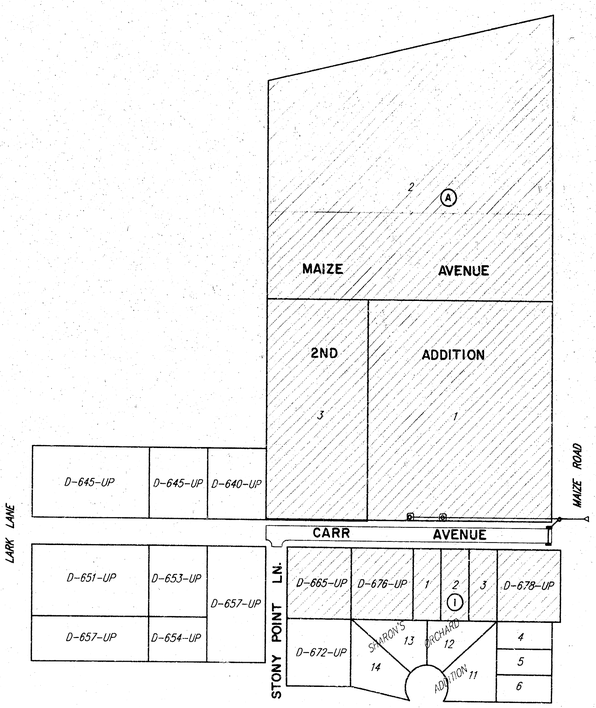

Benefit District:

INDEX:

1. TITLE SHEET
2. 31' B-B TYP. PAVT SECTION
3. SNS ASSEMBLY DETAILS
4.-5. CARR AVENUE PAVING PLAN
6. EARTHWORK X-SECTIONS
7. DRAINAGE PLAN
8. DROP INLET DETAIL
9. TYPE II INLET DETAIL
10. VALLEY GUTTER DETAIL
11. SPECIAL SHALLOW TYPE "A" MANHOLE DETAIL

INCIDENTAL DRAINAGE
BOOKED
8-12-96
MCG
D-302

Scale: 1" = 150'
• = Iron

BAUGHMAN COMPANY P. A.
ENGINEERING & SURVEYING
316/262-7271 • 315 ELLIS • WICHITA, KANSAS 67211

CARR AVENUE

TYPICAL 31' B-B PAVEMENT DETAILS

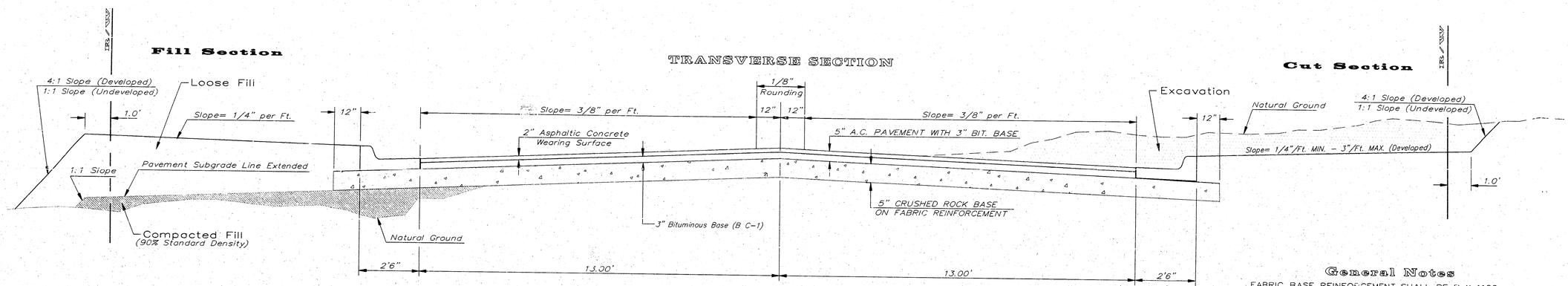

CRUSHED ROCK GRADATION REQUIREMENTS
PERCENT OF AGGREGATE RETAINED

2-1/2"	0
3/4"	20 - 60
#4	50 - 80
#40	80 - 94
#200	90 - 98

ROCK QUALITY SHALL CONFORM TO THE REQUIREMENTS SPECIFIED BE THE KDOT 1990 EDITION STANDARD SPECIFICATION SUBSECTION 1102 FOR DURABILITY CLASS I.

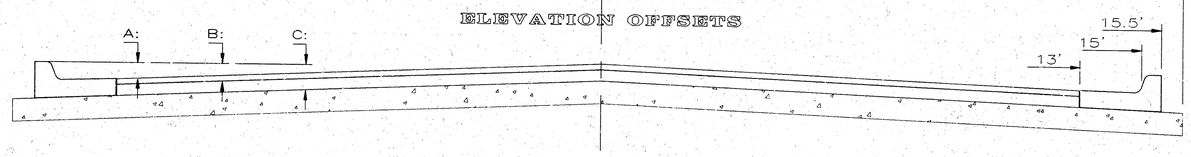

	DISTANCE FROM CENTERLINE (LT. & RT.)										
	0'	2'	4'	6'	7.5'	10'	12'	13'	15'	15.5'	16.5'
A: Top of Curbs to Top of Surface Lift	0.10	0.14	0.21	0.27	0.32	0.39	0.46	0.49	–	–	–
B: Top of Curbs to Top of Upper Base Lift	0.27	0.31	0.37	0.44	0.48	0.56	0.62	0.65	–	–	–.
C: Top of Curbs to Top of C.R. Subgrade	0.52	0.56	0.62	0.69	0.73	0.81	0.87	0.90	0.97	0.98	1.01

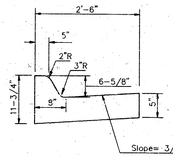

COMBINED CURB & GUTTER

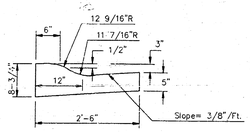

COMBINED ROLL TYPE CURB & GUTTER

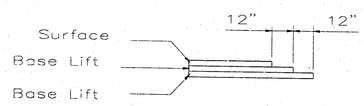

TRANSVERSE CONSTRUCTION JOINTS

Transverse construction joints shall be constructed in flexible base pavements at locations where pavement joins existing flexible base pavement as shown by the detail. All costs associated with the construction of the transverse joint shall be included in the bid price for Square Yards 5" ASPHALTIC CONCRETE (3" BITUMINOUS BASE).

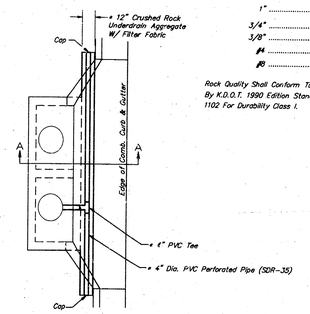

PLAN

* UNDERDRAIN AGGREGATE
Percent of Aggregate Retained

1"	0
3/4"	0 to 10
3/8"	45 to 80
#4	90 to 100
#8	95 to 100

Rock Quality Shall Conform To The Requirements Specified By K.D.O.T. 1990 Edition Standard Specification Subsection 1102 For Durability Class I.

NOTE: Place 4" PVC Perforated Pipe at all drainage sump locations.
Cost of Underdrain System to be Incidental to the Reinforced Crushed Rock Subgrade.
Inlet Type May Vary From That Shown.

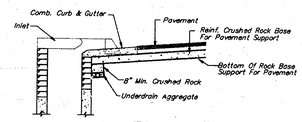

(Min. 16 Perforations Per Lin. Ft. @ 1/4" Dia.)
Perforations To Be on Bottom Half

SECTION A-A

PAVEMENT UNDERDRAIN DETAIL
NOT TO SCALE

General Notes

FABRIC BASE REINFORCEMENT SHALL BE B X 1100 BY TENSAR CORPORATION OR LBO201 BY TENAX CORPORATION OR APPROVED EQUAL. FABRIC BASE REINFORCEMENT SHALL BE INSTALLED IN ACCORDANCE WITH MANUFACTURER'S RECOMMENDATIONS.

ROCK BASE IS TO BE COMPACTED AND SMOOTHED WITH A STEEL FACED ROLLER PRIOR TO PLACEMENT OF ASPHALT. TACK COAT WILL NOT BE APPLIED TO ROCK BASE.

A TACK COAT OF EMULSIFIED ASPHALT (SC-1H OR CSS-1H) SHALL BE APPLIED AT AN APPROXIMATE RATE OF 0.05 GALLONS PER SQUARE YARD BETWEEN EACH LIFT OF ASPHALTIC MATERIAL.

BITUMINOUS BASE AND ASPHALTIC CONCRETE WEARING SURFACE SHALL BE PLACED WITH A LAYDOWN MACHINE HAVING AUTOMATIC CONTROLS FOR LINE AND GRADE.

CONSTRUCTION JOINTS IN EACH LIFT SHALL BE STAGGERED A MINIMUM DISTANCE OF ONE (1) FOOT FROM JOINTS IN PRECEDING LIFTS AND PLACED SO THAT A JOINT WILL BE CONSTRUCTED ON THE CENTERLINE OF THE TOP LIFT.

THE ASPHALTIC CONCRETE PAVEMENT BETWEEN THE COMBINED CURB AND GUTTER SHALL BE PAID AS SQUARE YARDS OF 5" ASPHALTIC CONCRETE (3" BITUMINOUS BASE.)

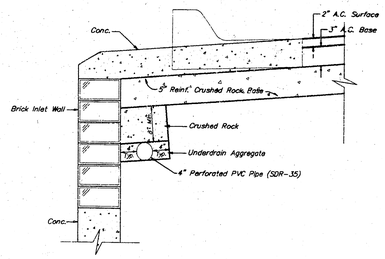

TRENCH DRAIN DETAIL FOR RES. STREETS
NOT TO SCALE

5 INCH Residential Asphaltic Concrete Pavement w/Crushed Rock Base on Fabric Reinforcement
City of Wichita, Kansas

BAUGHMAN COMPANY P.A.
ENGINEERING, SURVEYING, & PLANNING
316-262-7271 • 315 ELLIS • WICHITA, KANSAS 67211

PROJECT NUMBER	SHEET
472-73-245-92439-000-000-001	2 OF 11

DESIGN	DRAWN	APPROVED	DATE	SCALE
C.D.W.	Staff			

CARR1STADDXR

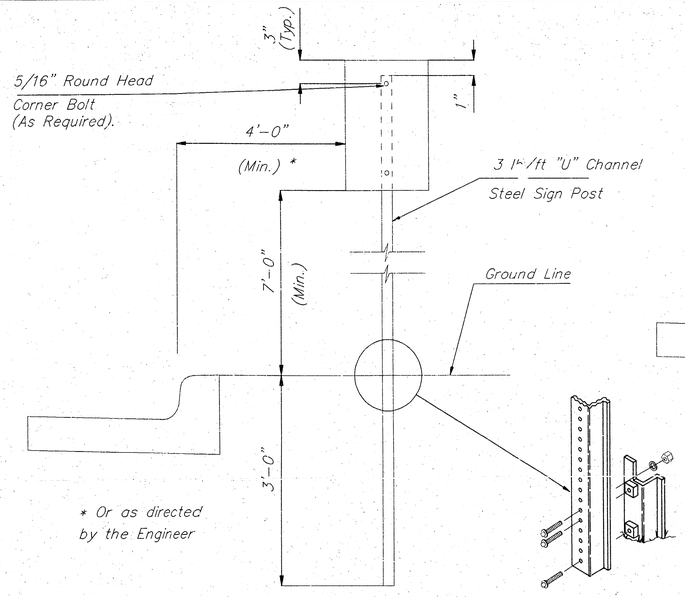

Typical Traffic Control Sign Mounting Installation
Curb and Gutter Section

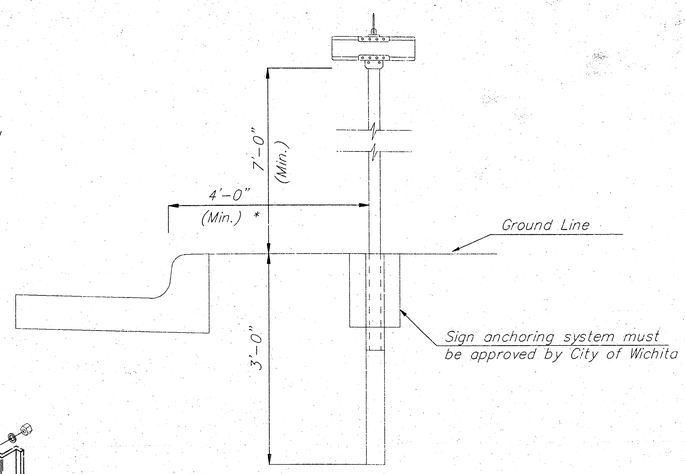

Typical Street Name Sign Mounting Installation
Curb and Gutter Section

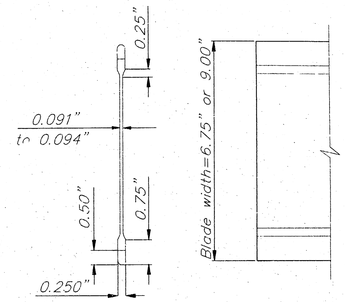

STREET NAME SIGN
BLADE DETAILS

GENERAL NOTES – SIGNING

NOTE: References below to "standard specifications" denote "standard specifications for state road and bridge construction, edition 1990" by the Kansas Department of Transportation.

1. Post Anchors. Posts shall be anchored with a yielding base post support as detailed.
2. Posts for traffic control signs. Posts shall conform to the requirements of subsection 1620 of the standard specifications except that all posts shall weigh 3 lbs./foot minimum.
3. Posts for street name signs (SNS). Posts shall be 9 feet long, constructed from 2 3/8" O.D. galvanized steel pipe weighing a minimum of 3.65 lbs./foot. Posts shall be positioned so that the bottom blade is 7 feet above grade.
4. Sign blanks for traffic control signs. Sign blanks shall be fabricated from 0.080" aluminum alloy 6063–T6 conforming to the requirements of subsection 1626 of the standard specifications.
5. Signs blades for street name signs. Extruded aluminum blades shall be aluminum alloy conforming to 6063–T6 or 5052–H38 (ASTM specifications B221, latest issue). Blades shall have an alodine or phosphate etched finish. Blades shall have square corners and no holes.

   Blades bearing the street names shall be firmly attached to the mounting brackets using allen–type set screws. The blades shall be oriented parallel to the street.
6. Mounting brackets for SNS. Die–cast aluminum brackets shall be aluminum alloy 360 having a tensile strength of 44,000 PSI. The brackets shall be smoothly finished free of pits, burrs, and flaws. Each bracket shall be tapped and drilled for 5/16" zinc–plated allen–type set screws having self locking saw–tooth ends.
7. Fasteners. All steel fasteners for traffic control signs shall be galvanized and shall conform to the requirements of subsection 1014 of the standard specifications.
8. Reflective sheeting. Reflective sheeting shall be type II – High performance class HA in accordance with subsection 2201 of the standard specifications.
9. Process ink. All process ink shall conform to the requirements of subsection 2202 of the standard specifications.
10. Details. Regulatory and warning signs shall conform to the details in "Standard Highway Signs", FHWA 1979.
11. Details – SNS. The reflective sheeting for the 6 3/4" standard size SNS is to be the highway green reverse screened background with silver–white #2 copy with 4" uppercase and 3" lower case primary copy and suffix copy. Both series "C". Where suffix letters are used on numbered streets such as RD, TH, etc., they shall be 1 1/2" lower case series "C" letters. Faces to trim to a 6 1/4" (See detail A).

    The reflective sheeting for the 9" metro size SNS is to be the highway green reverse screened background with silver–white #2 copy with 5" upper case and 3 3/4" lower case primary copy and suffix copy, both series "C". Where suffix letters are used on numbered streets, such as RD, TH, etc., they shall be 3" lower case series "C". The cardinal direction centered directly below the block number shall be an upper case, 3" series "C" letter. Faces to trim to an 8 1/2" width (See detail B).

    For cul–de–sac streets, a 9" metro size blade shall be used with the house numbers displayed beneath the street name. Lettering to be the same as for the 6 3/4" size blade, except that the house number information shall be 3" series "C".

    Shop drawings of layout for SNS shall be submitted to the Traffic of Engineering Division of the City of Wichita for approval prior to fabrication. The finished signs as supplied shall be of good appearance, free from ragged edges, cracks, scales or blisters, and shall be clean cut. Signs shall be packed in such a manner as to prevent damage or defacement during shipment or storage.
12. New traffic control and street name signs. New traffic control and street name signs shall be measured and paid for at the lump sum price for signing. The payment as set forth above shall be considered full compensation for all excavation, backfilling, posts, anchors, fasteners, materials, labor, tools, and incidentals necessary to complete this work.

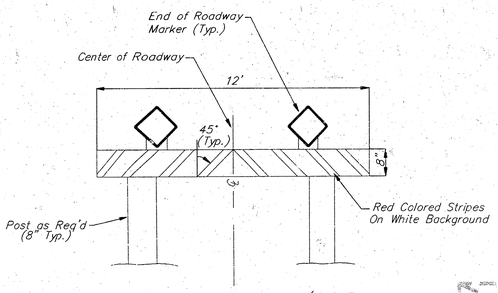

Type 1 Barricade Detail w/E.O.R. Marker

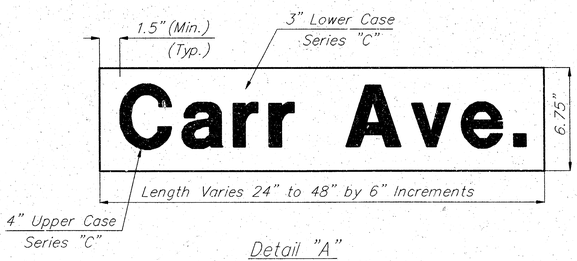

Detail "A"
6.75" Standard

SIGN ASSEMBLY TABLE

STATION	OFFSET	SIGN	QUANTITY *
0+00	28' RT	STREET	1
TOTAL			1

* For Information Only

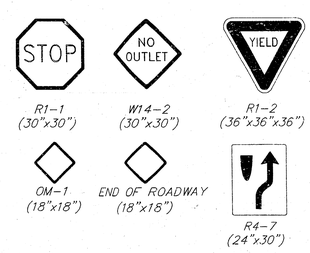

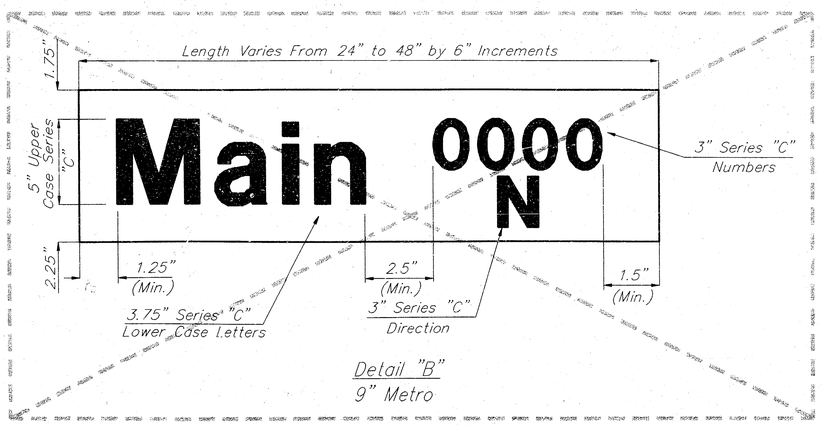

Detail "B"
9" Metro

STREET NAME	NO. BLADES REQ'D	
	6 3/4" STD	9" METRO
CARR AVE	1	
STONE POINT LN.	1	

City Of Wichita Public Works
Signing Detail

BAUGHMAN COMPANY P. A.
ENGINEERING & SURVEYING
316/262–7271 • 315 ELLIS • WICHITA, KANSAS 67211

PROJECT NUMBER
472–76–245–82433–000–000–001

SHEET 3 OF 11

DESIGN	DRAWN	UTIL. CHECK'D	DATE	SCALE
		B		None

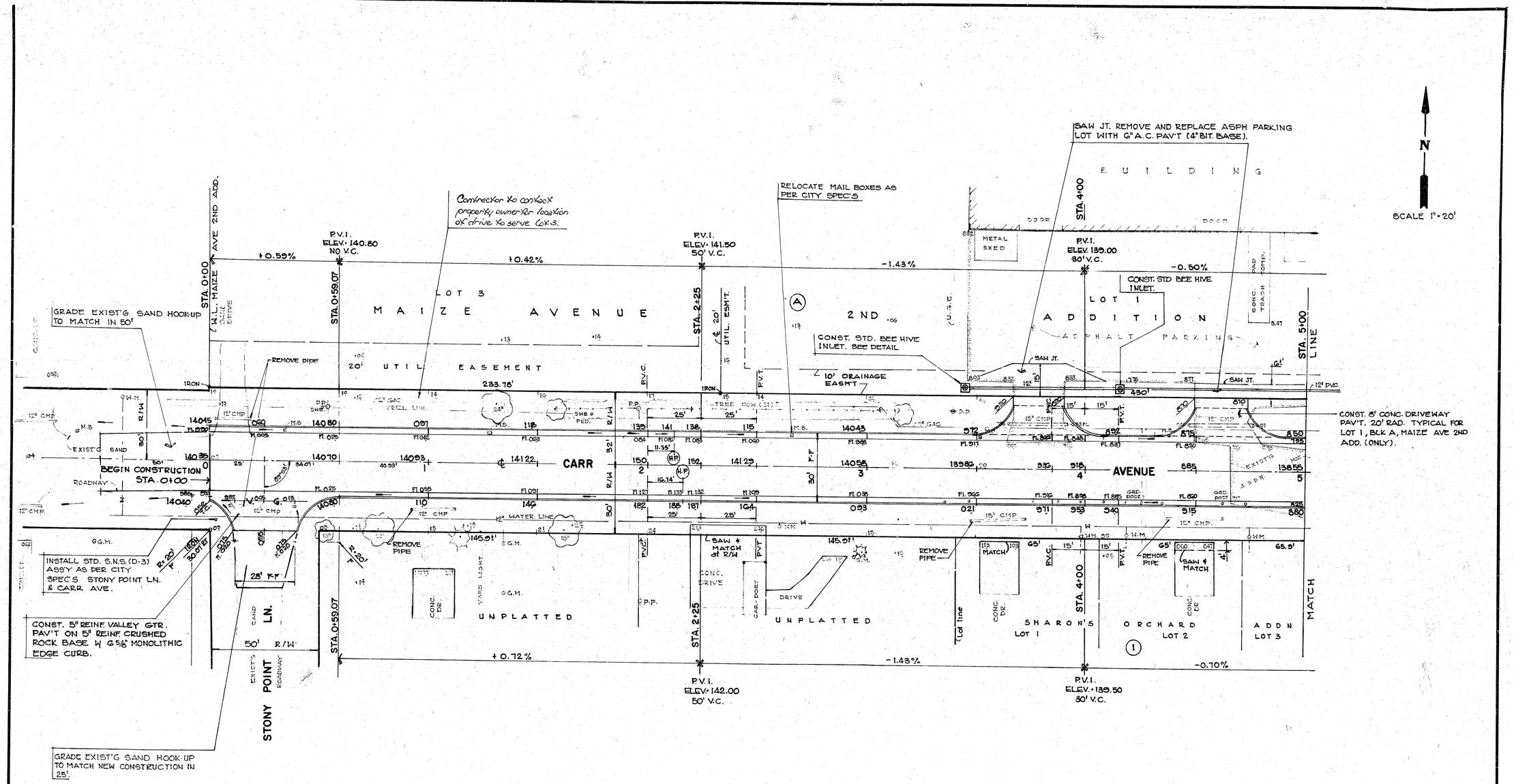

EARTHWORK TOTALS

EXCAVATION = 1259.2 CU.YDS
— A.C. MAT VOL. = 77.7 " "
TOTAL = 1181.5 CU.YDS

CARR AVENUE	
W.L. MAIZE AVENUE 2ND ADDITION. To MAIZE ROAD	
BAUGHMAN COMPANY P.A. ENGINEERING & SURVEYING	
316-262-7271 • 315 ELLIS • WICHITA, KANSAS 67211	
PROJECT NUMBER 472-76-245-82433-000-000-001	SHEET 4 OF 11
DESIGN B / DRAWN WEE / APPROVED B / DATE 12/76 / SCALE 1"=20'	

B.M. - "D" CUT, TOP CURB, N.E. CORNER MAIZE ROAD & CARR AVENUE. ELEV. = 1317.48 CITY DATUM.

N

SCALE 1" = 20'

COMPOSITE'S, INC.
1745 S. MAIZE ROAD.

TANK

COOLER

SMB

-0.50%

MAIZE AVENUE 2ND ASPHALT PARKING ADDN. LOT 1

10' DRAINAGE EASM'T.

G.L. LINE STA. 5+00

SAW & MATCH

STA. 6+57.7

STA. 7+13.69

50' R/W

ROADWAY

ASPH.

DITCH

PLAINE PARK 2ND ADDITION

REPLACE PAV'T CUT WITH 5" A.C. PAV'T (3" B-B) ON 5" REINF. CRUSHED ROCK BASE. (FLOWABLE FILL).

2" GAS?

15" CMP.

13850 FL 795

13855 FL 825

13880

CARR

EXIST'G ASPH MAT

824

845

13794

13810

FL 730

FL 735

FL 740

775 T.C.

720 FL.

SAW & MATCH STAGHED

AVENUE

30' LT. TO 30'

15" CMP

12" R.M.

145.08'

REMOVE EXIST'G ASPH. MAT. ROADWAY & ENTRANCE PIPES.

CONST. COMBINED CURB & GUTTER (6 SACK).

GM 824

SAW & MATCH

CONC. DR.

MATCH

SHARON'S ORCHARD ADD. LOT 8 (1)

1/2" IRON FOUND

U N P L A T T E D

STA. 6+63.69 END CONSTRUCTION

-0.70%

CONST. 5" A.C. PAVEMENT ON 5" REINF. CRUSHED ROCK BASE.

B.M. 1317.48 T.C. 2.00 FT.

13135 T.C.

13145 T.C.

W.V.

8"

16" GAS LINE

30' R/W

28' F.F.

MAIZE

CONST. 5" A.C. PAV'T (3" BB) HOOK-UP ON 5" REINF. CRUSHED ROCK BASE.

CARR AVENUE

W.L. MAIZE AVENUE 2ND ADDITION. To MAIZE ROAD

BAUGHMAN COMPANY P.A.
ENGINEERING & SURVEYING
316-262-7271 • 315 ELLIS • WICHITA, KANSAS 67211

PROJECT NUMBER	SHEET
472-76-245-82433-000-000-001	5 OF 11

DESIGN	DRAWN	APPROVED	DATE	SCALE
D	WEE	D	12/76	1"=20'

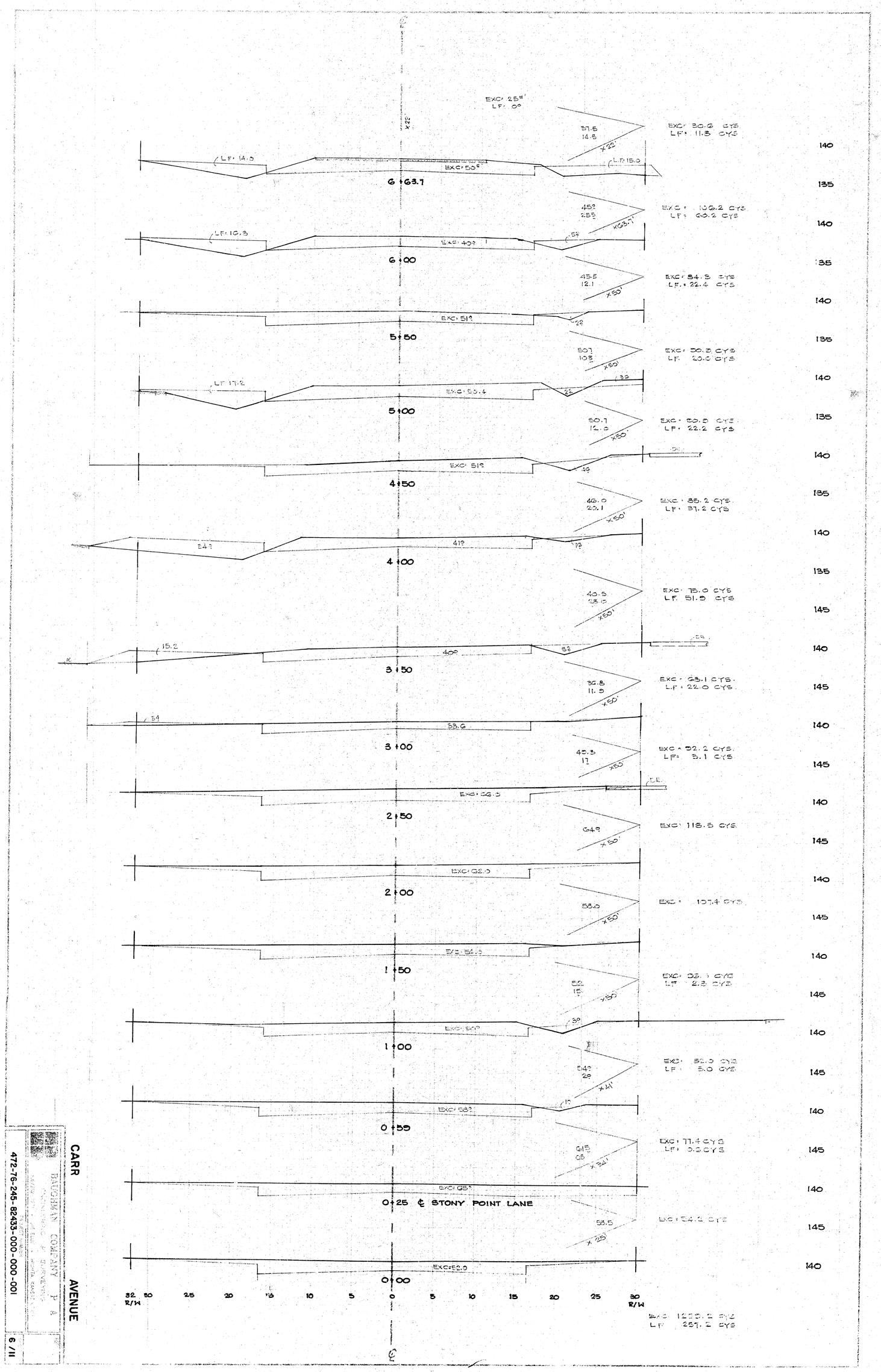

CARR AVENUE

BAUGHMAN COMPANY P.A.

472-76-245-82433-000-000-001

6/11

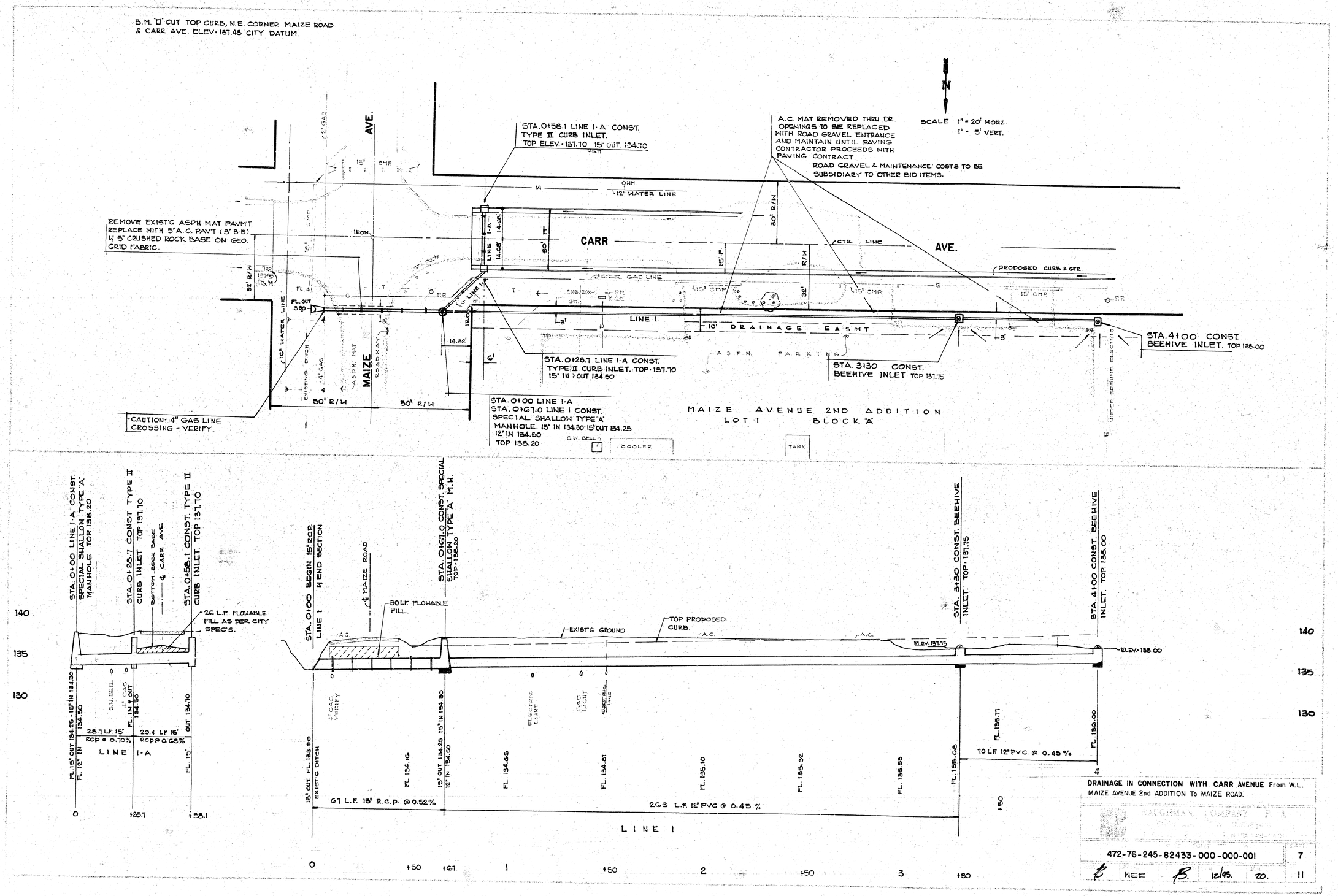

DRAINAGE IN CONNECTION WITH CARR AVENUE From W.L. MAIZE AVENUE 2nd ADDITION To MAIZE ROAD.

BAUGHMAN COMPANY P.A.

472-76-245-82433-000-000-001 | 7

WEE | 12/95. | 20. | 11

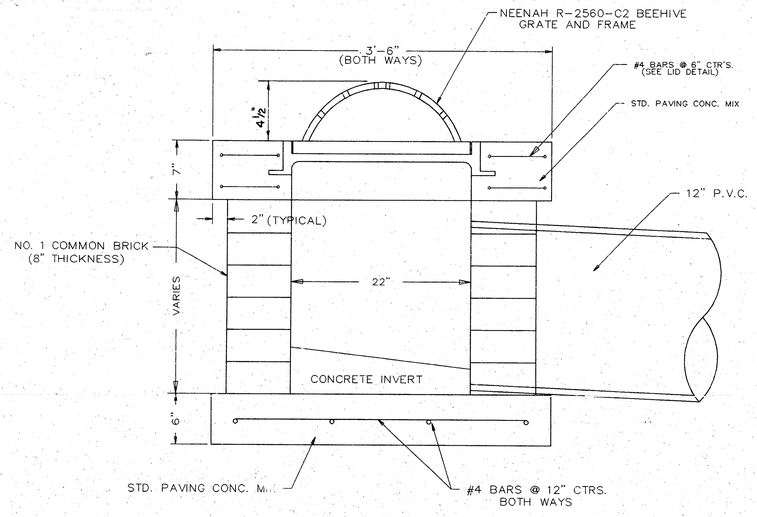

SIDE VIEW

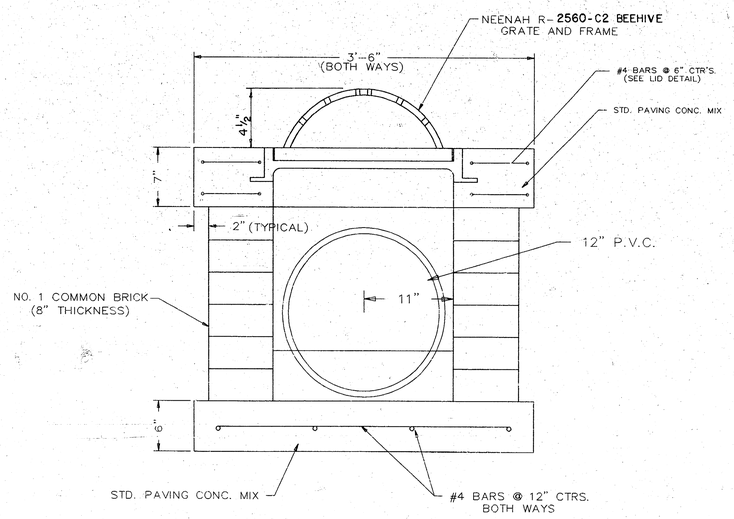

VIEW FROM CURB LINE

GENERAL NOTES

INLET INVERT SHALL BE SHAPED WITH 8 SACK SAND MIX CONCRETE TO CREATE FLOW CHANNELS AND TO INCREASE HYDRAULIC EFFICIENCY SUCH THAT TH INLET WILL BE SELF CLEANING BETWEEN ALL INLET AND/OR OUTLET PIPES.

CONCRETE TOPS TO BE INSTALLED ON THIN MORTAR CUSHION TO INSURE FULL SUPPORT ALONG BRICK WALLS. CONCRETE TOPS MAY BE CAST IN PLACE OR PRECAST. CONCRETE USED FOR INLET CONSTRUCTION SHALL BE CONCRETE PAVEMENT MIX.

INLET TOP REINFORCING SHALL BE SPACED ON 6" MAX. CENTERS. BARS IN INLET TOP TO BE FIELD BENT OR CUT TO CLEAR BEEHIVE MANHOLE INLET RING.

THE ENDS OF ALL PIPES INSTALLED IN INLETS SHALL BE CUT OFF FLUSH WITH THE INSIDE FACE OF THE INLET WALL.

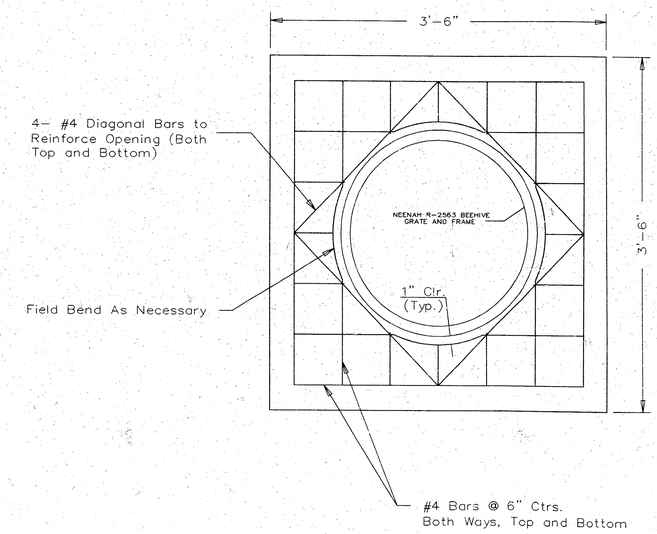

LID REINFORCEMENT DETAIL

BEEHIVE INLET DETAIL

BAUGHMAN COMPANY P. A.
SURVEYING & ENGINEERING
316/262-7271 • 315 ELLIS • WICHITA, KANSAS 67211

REV.

PROJECT NUMBER
472-76-245-82433-000-000-001

SHEET 8 OF 11

DESIGN	DRAWN	APPROVED	DATE	SCALE
B		B		

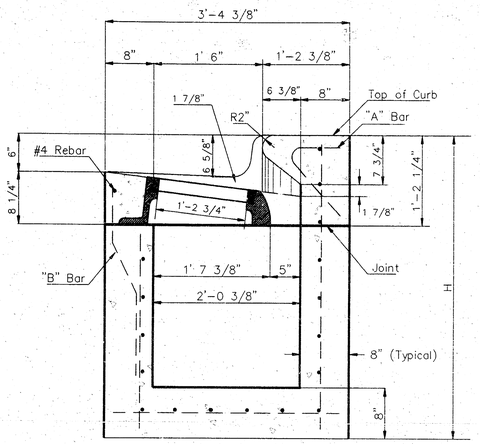

SECTION A-A

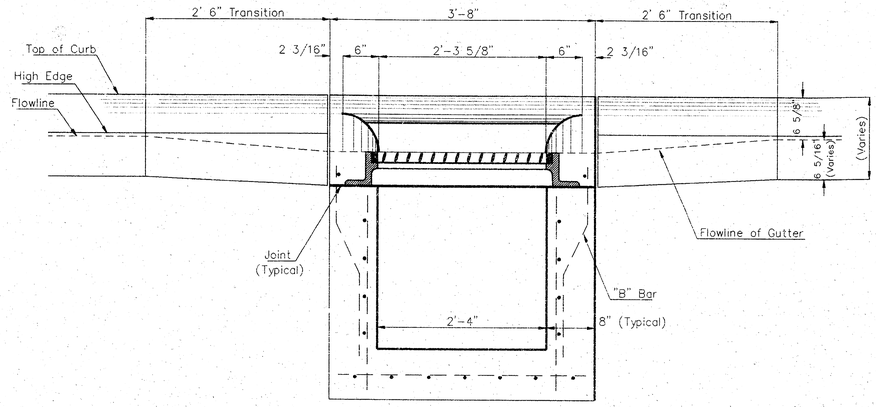

SECTION C-C

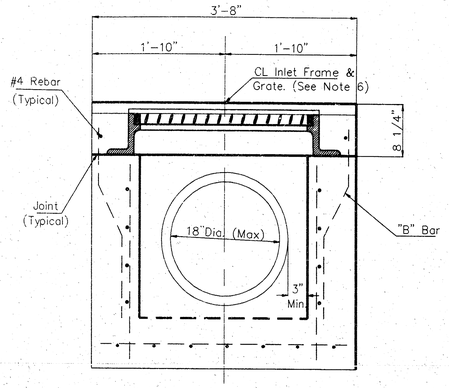

SECTION D-D

REAR WALL



"A" Bar

"B" Bar

General Notes

1. Use the concrete mix specified for the City of Wichita concrete pavement throughout. All exposed edges shall be finished with an edging tool. Reinforcing bars shall be bent around pipe.
2. Inlet invert shall be shaped with 8 sack mix concrete to create flow channels and to increase hydraulic efficiency such that the inlet will be self cleaning between all inlet and/or outlet pipes.
3. All bars are #4 with 6" spacing and shall have a minimum clearance of 1 1/2" inches unless otherwise noted on the plans.
4. When directed by the Engineer, a small opening may be required in the back of the inlet in order to drain a low area. Reinforcing bars will extend through the openings. No deductions in concrete quantities will be made for these openings.
5. No deductions will be made in pay length of curb, gutter, or curb and gutter through the inlet area.
6. Use Neenah R-3289 HV Single inlet Frame and Grate or approved equal. Inlet frame to be proof load tested to 40,000 lbs. on unsupported side.
7. Reinforcing bars shall be cut or bent around pipes. No deduction in concrete quantities shall be made for pipe openings.
8. The vanes of the grate shall be oriented with respect to the flow arrows shown on the plans.

Redrawn Jan.1992

DETAIL STANDARD TYPE II CURB INLET

CITY OF WICHITA, KANSAS

INLET OPENINGS = 6" x 2'-3 5/8"

January, 1987

PROJECT NUMBER 472-76-245-82433-000-000-001

SHEET 9 OF 11

BAUGHMAN COMPANY P.A.
ENGINEERING & SURVEYING
316/262-7271 • 315 ELLIS • WICHITA, KANSAS 67211

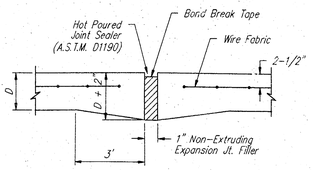

EXPANSION JOINT

NOTE: Extra Thickness to be Subsidiary to Price of Square Yards Pavement

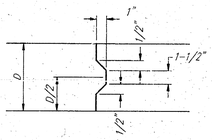

KEYWAY DETAIL

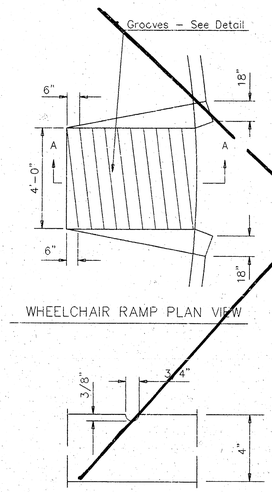

WHEELCHAIR RAMP PLAN VIEW

GROOVE DETAIL

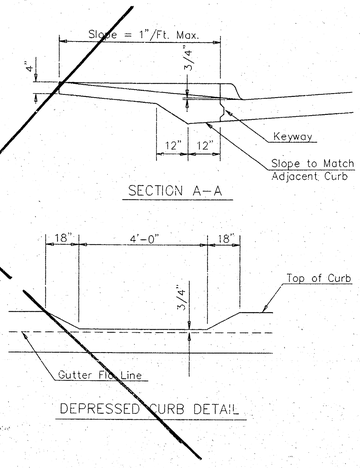

SECTION A-A

DEPRESSED CURB DETAIL

WHEELCHAIR RAMP DETAIL

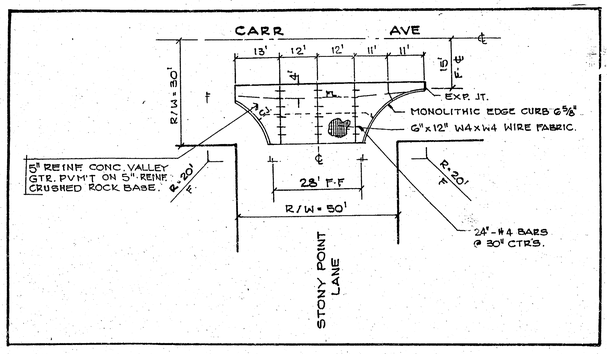

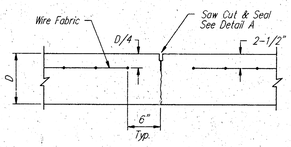

CONTRACTION JOINT DETAIL (C.J.)

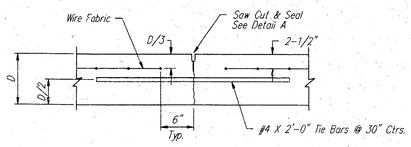

LONGITUDINAL JOINT DETAIL (L.J.)

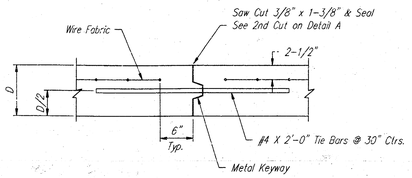

OPTIONAL LONGITUDINAL JOINT DETAIL (L.J.)
(CONSTRUCTION JOINT)

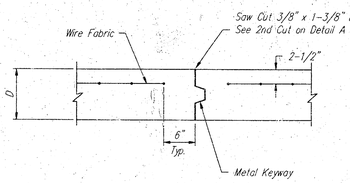

OPTIONAL CONTRACTION JOINT
(CONSTRUCTION JOINT)

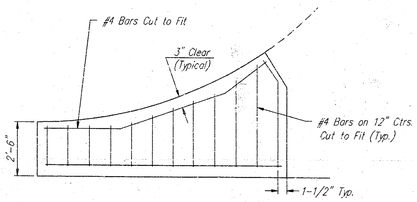

WING REINFORCING DETAIL

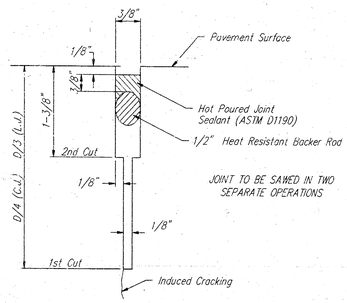

SAW JOINT DETAIL

VALLEY GUTTER DETAILS

BAUGHMAN COMPANY P. A.
ENGINEERING & SURVEYING
316/262-7271 • 315 ELLIS • WICHITA, KANSAS 67211

REV.

PROJECT NUMBER
472-76-245 - 82433- 000-000-001

SHEET 10 OF 11

DESIGN	DRAWN	APPROVED	DATE	SCALE
CMB\TCR		B		1" = 20'

C:\ENG\DETAILS\VGDETAIL

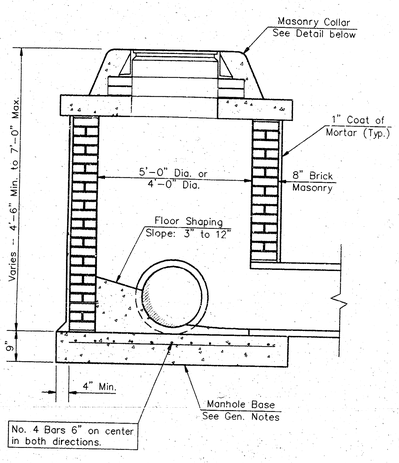

SHALLOW TYPE "A" MANHOLE

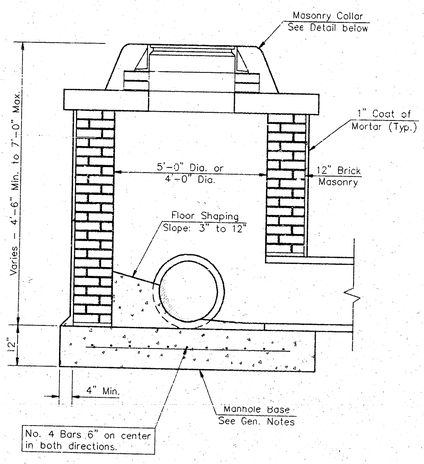

SHALLOW TYPE "B" MANHOLE

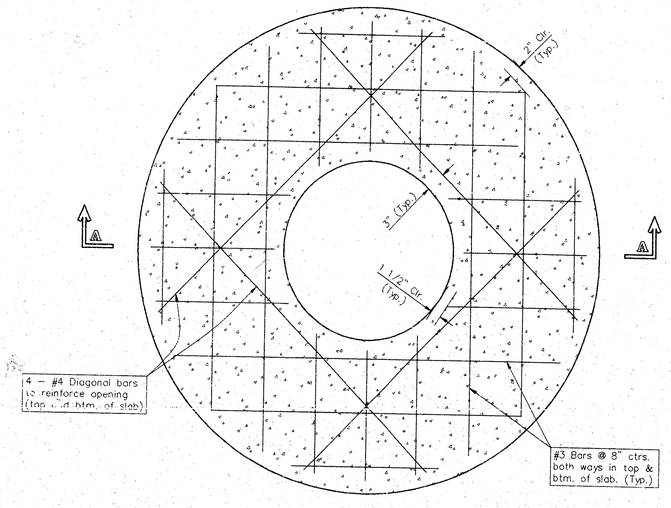

PLAN

GENERAL NOTES

1. Mortar used in masonry construction shall contain 8 sacks of cement per cubic yard. Concrete used in manhole bases shall conform to the requirements of concrete for concrete pavement construction as specified in the city standard paving specifications using city concrete cement mix without air entraining admixture. Mortar shall be placed around the manhole ring as shown on the drawings when manholes are constructed in unpaved areas. Type "A" shallow manholes can be used on sewers when the manhole is not located within public street pavement. Manholes constructed where pipe sizes are smaller than 24" shall have an inside diameter of 4'. Manholes constructed where pipe sizes are 24" or larger shall have an inside diameter of 5'. Completed manhole shall be without leaks and water tight.

2. Reinforcing steel shall be installed in the manhole bases and shall consist of no. 4 bars placed on 6" centers in both directions. The manhole base reinforcement shall be placed 6" above the bottom of the manhole base. All costs for furnishing and installing reinforcing steel shall be included in the unit price bid for the manhole.

3. The floors of all manholes shall be shaped with flow channels such that the manholes will be self cleaning and free of areas where solids could be deposited as sewage flows through the manhole from all inlet pipes to the outlet pipe. Flow channels shall be formed to match the bottom halves of the inflowing pipes and the outflowing pipe as shown by the drawings. Manhole floors shall have slopes of 3 inches per foot in the areas outside of the flow channels sloped toward the flow channels. Pipes laid through manholes shall have the top half removed to neat lines for the full inside diameter of the manhole. Manhole floors shall then be shaped around the bottom half of the pipe which forms the flow channel.

4. Pipes installed within the excavation made for the manhole shall be cradled with concrete to the limits of the manhole excavation. When clay pipe is used, the cradle shall extend to the first joint outside the manhole. The cradle shall be terminated at the clay pipe joint in a manner which will maintain the flexibility of the joint. Cost of cradle within manhole excavation or to clay pipe joints adjacent to manhole shall be included in the unit price bid for the manhole.

5. Manhole cover castings and manhole frame castings shall conform to the requirements as indicated in the standard specifications and as shown in the standard detail drawings.

6. The crowns of inflowing pipes shall never be set lower than the crown of the outflowing pipe.

7. Standard shallow manholes type "A" and "B" shall be paid for at the unit price bid per each for the type and diameter indicated. Standard special shallow manholes type "A" and "B" shall be paid for at the unit price bid per each for the type indicated. All standard shallow manhole diameters will be 4' unless indicated otherwise.

8. All brick used in manhole construction shall meet Grade SW of ASTM C652 or C62-87.

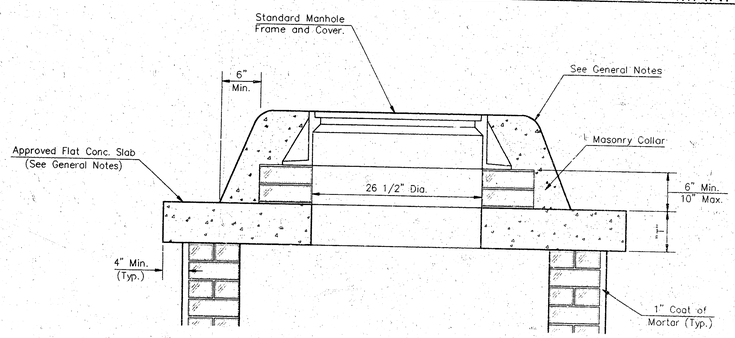

MASONRY COLLAR DETAIL

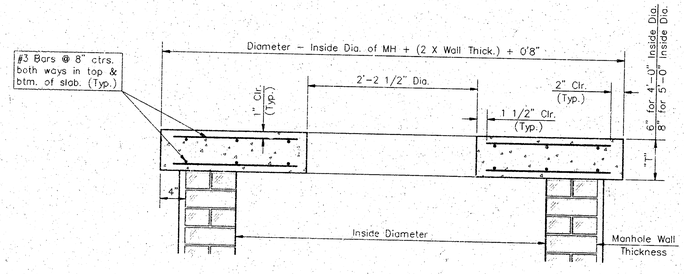

SECTION A-A

FLAT CONCRETE SLAB DETAILS

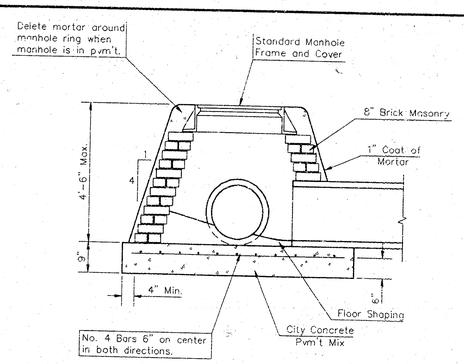

SPECIAL SHALLOW TYPE "A" MANHOLE

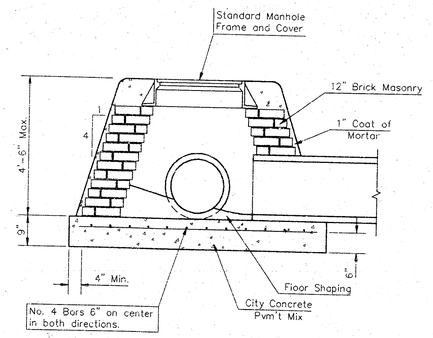

SPECIAL SHALLOW TYPE "B" MANHOLE

DETAIL\SHLWMH.DWG

CITY OF WICHITA, KANSAS

STANDARD SHALLOW MANHOLES

TYPE 'A' AND TYPE 'B'

PROJECT NUMBER
472-76-245-82433-000-000-001

SHEET 11 / OF 11

BAUGHMAN COMPANY P. A.
ENGINEERING & SURVEYING
316/262-7271 • 315 ELLIS • WICHITA, KANSAS 67211