SHEET NO.	TOTAL SHEETS
1	7

CITY OF WICHITA, KANSAS
MICHAEL E. LINDEBAK, P.E., CITY ENGINEER

PRIVATE STORM WATER SEWER

IN

BRADLEY FAIR 4TH ADDITION

CITY OF WICHITA PRIVATE PROJECT NO. 1015PPS (607861)

BOOKED
4-16-01
MAG
D-506

INDEX OF SHEETS

1. TITLE SHEET
2. SWS LINE NO. 1 & LINE NO. 2
3. DETENTION BASIN
4. RC MANHOLE DETAILS
5. MANHOLE FRAME AND COVER
6. STANDARD AREA INLET
7. EROSION CONTROL DETAILS

NOTE TO CONTRACTOR

INSPECTION AND TESTING FOR THIS PROJECT IS TO BE PROVIDED BY A LICENSED CONSULTING ENGINEERING FIRM CONTRACTED BY THE CONTRACTOR. SAID INSPECTION TO BE IN ACCORDANCE WITH THE CITY OF WICHITA STANDARD CONSTRUCTION ENGINEERING PRACTICES AND CERTIFIED BY A LICENSED PROFESSIONAL ENGINEER. NO WORK SHALL BE PERFORMED IN DEDICATED EASEMENTS OR PUBLIC RIGHT-OF-WAY BY THE CONTRACTOR UNTIL SUCH INSPECTION IS ARRANGED FOR AND REQUIRED BONDS HAVE BEEN SUBMITTED TO AND APPROVED BY THE CITY NOR SHALL ANY WORK BE COMMENCED IN DEDICATED EASEMENTS OR PUBLIC RIGHT-OF-WAY WITHOUT WRITTEN AUTHORIZATION BY THE CITY ENGINEER. IMPROVEMENTS PERFORMED UNDER THIS PROJECT SHALL NOT BE ACCEPTED BY THE CITY UNTIL ALL APPLICABLE DOCUMENTATION HAS BEEN SUBMITTED TO THE CITY ENGINEER. THIS MAY INCLUDE: AS-BUILT DRAWINGS, INSPECTION LOGS, TEST DOCUMENTATION, TV TAPES, AND A CERTIFICATE OF COMPLETION. THE ABOVE SHALL BE PERFORMED BY THE CONSULTING FIRM CONTRACTED TO INSPECT THIS PROJECT.

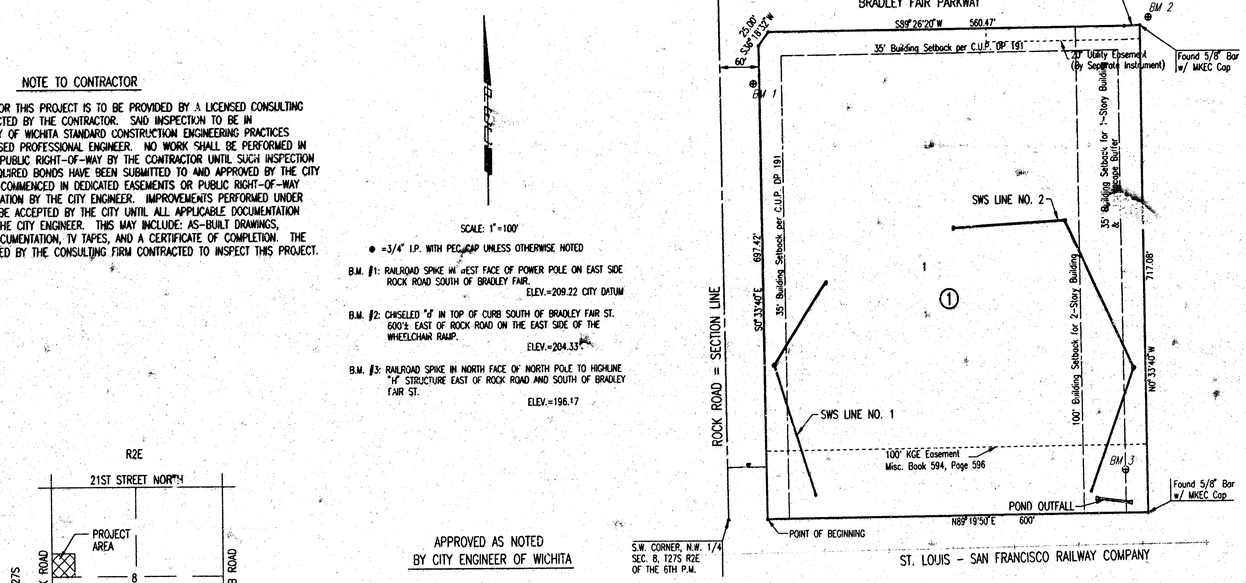

SCALE: 1"=100'

● =3/4" I.P. WITH PEG CAP UNLESS OTHERWISE NOTED

B.M. #1: RAILROAD SPIKE IN WEST FACE OF POWER POLE ON EAST SIDE ROCK ROAD SOUTH OF BRADLEY FAIR.
ELEV.=209.22 CITY DATUM

B.M. #2: CHISELED "S" IN TOP OF CURB SOUTH OF BRADLEY FAIR ST. 600'± EAST OF ROCK ROAD ON THE EAST SIDE OF THE WHEELCHAIR RAMP.
ELEV.=204.33

B.M. #3: RAILROAD SPIKE IN NORTH FACE OF NORTH POLE TO HIGHLINE "H" STRUCTURE EAST OF ROCK ROAD AND SOUTH OF BRADLEY FAIR ST.
ELEV.=196.17

VICINITY MAP

APPROVED AS NOTED
BY CITY ENGINEER OF WICHITA

SANITARY SEWERS _____

STORM SEWERS VRH 6/20/00

DRIVEWAY APPROACHES _____

WATER MAINS _____

PAVING _____



RECORD DRAWING
08 DEC 00

GENERAL NOTES

UNDERGROUND UTILITY SERVICE LINES AND OVERHEAD UTILITY POLE LINES ARE TO BE ADJUSTED AS NECESSARY BY OTHERS PRIOR TO CONSTRUCTION UNLESS THE PLANS SPECIFICALLY CALL FOR THEIR ADJUSTMENT BY THE CONTRACTOR. EXISTING UTILITIES AND THEIR LOCATION, AS SHOWN ON THE PLANS, REPRESENT THE BEST INFORMATION OBTAINABLE FOR DESIGN. LOCATION INFORMATION HAS BEEN OBTAINED FROM THE VARIOUS UTILITY COMPANIES AND IS EITHER FROM COMPANY RECORD DRAWINGS OR COMPANY PROVIDED FIELD LOCATIONS. THE CONTRACTOR WILL BE REQUIRED TO WORK AROUND EXISTING UTILITIES WITHIN THE RIGHT-OF-WAY WHICH DO NOT CONFLICT WITH PROPOSED CONSTRUCTION. CONTRACTOR SHALL SATISFY HIMSELF OF SUBSURFACE CONDITIONS PRIOR TO BIDDING.

TREES AND SHRUBS IN PUBLIC RIGHT-OF-WAY WHICH ARE IN DIRECT CONFLICT WITH PROPOSED NEW CONSTRUCTION SHALL BE REMOVED BY THE CONTRACTOR WITH THE ENGINEER'S APPROVAL. TREES AND SHRUBS WHICH ARE NOT IN DIRECT CONFLICT WITH PROPOSED NEW CONSTRUCTION SHALL BE SAVED AND PROTECTED FROM DAMAGE.

RUBBLE FROM THE REMOVAL OF MISCELLANEOUS STRUCTURES SHALL BE DISPOSED OF ON SITES TO BE PROVIDED BY THE CONTRACTOR AND APPROVED AS NOTED.

ALL DISPOSAL SITES MUST BE APPROVED BY THE KANSAS DEPARTMENT OF HEALTH AND ENVIRONMENT. MATERIAL EITHER STOCKPILED OR DISPOSED OF IN A FLOOD PLAIN WOULD REQUIRE A KANSAS STATE BOARD OF AGRICULTURE PERMIT. ANY MATERIAL DUMPED IN WATERS OF THE UNITED STATES OR WETLANDS IS SUBJECT TO U.S. CORPS OF ENGINEERS PERMITTING REGULATIONS. ANY MATERIAL BURIED OR STOCKPILED BEYOND APPROVED CONSTRUCTION LIMITS WOULD REQUIRE ADDITIONAL ARCHEOLOGICAL INVESTIGATIONS UNLESS BURIED IN A PREVIOUSLY APPROVED BORROW LOCATION.

CONTRACTOR SHALL PROVIDE A MINIMUM FORTY-EIGHT (48) HOUR ADVANCE NOTICE (EXCLUDING WEEKENDS AND HOLIDAYS) PRIOR TO BEGINNING ANY EXCAVATION, TO KANSAS ONE-CALL SYSTEM, A UTILITY LOCATION SERVICE, AT (316) 687-2470 TO REQUEST THE FOLLOWING UTILITY COMPANIES TO LOCATE ALL EXISTING LINES WITHIN THE PROJECT AREA: K.G.S. GAS, PEOPLES NATURAL GAS, K.G.E. ELECTRIC, SOUTHWESTERN BELL TELEPHONE, COX COMMUNICATIONS, CITY OF WICHITA SEWER MAINTENANCE AND CITY OF WICHITA WATER DEPARTMENT.

THE CONTRACTOR SHALL BE RESPONSIBLE FOR PRESERVING PROPERTY IRONS. THE CONTRACTOR WILL BE REQUIRED TO RE-ESTABLISH ANY PROPERTY IRONS WHICH ARE DAMAGED OR DESTROYED BY HIS CONSTRUCTION OPERATIONS. SUCH IRONS SHALL BE RE-ESTABLISHED BY A LICENSED LAND SURVEYOR IN ACCORDANCE WITH STATE LAWS.

THE WATER DEPARTMENT SHALL FIELD LOCATE WATER VALVES ONE TIME DURING CONSTRUCTION WHEN REQUESTED BY THE CONTRACTOR. IT SHALL BE THE CONTRACTOR'S RESPONSIBILITY TO PRESERVE SUCH FIELD LOCATIONS DURING THE CONSTRUCTION PROCESS. WATER VALVES, WATER VALVE BOXES OR FIRE HYDRANTS DAMAGED DURING CONSTRUCTION SHALL BE REPAIRED BY THE CONTRACTOR AT HIS OWN EXPENSE.

ALL AREAS DISTURBED DURING CONNSTRUCTION SHALL BE SEEDED, FERTILIZED, AND MULCHED ACCORDING TO CITY OF WICHITA STANDARDS AND SPECIFICATIONS.

JUNE 2000

PLANS PREPARED BY
PROFESSIONAL ENGINEERING CONSULTANTS, P.A.
ENGINEERS
WICHITA, KANSAS

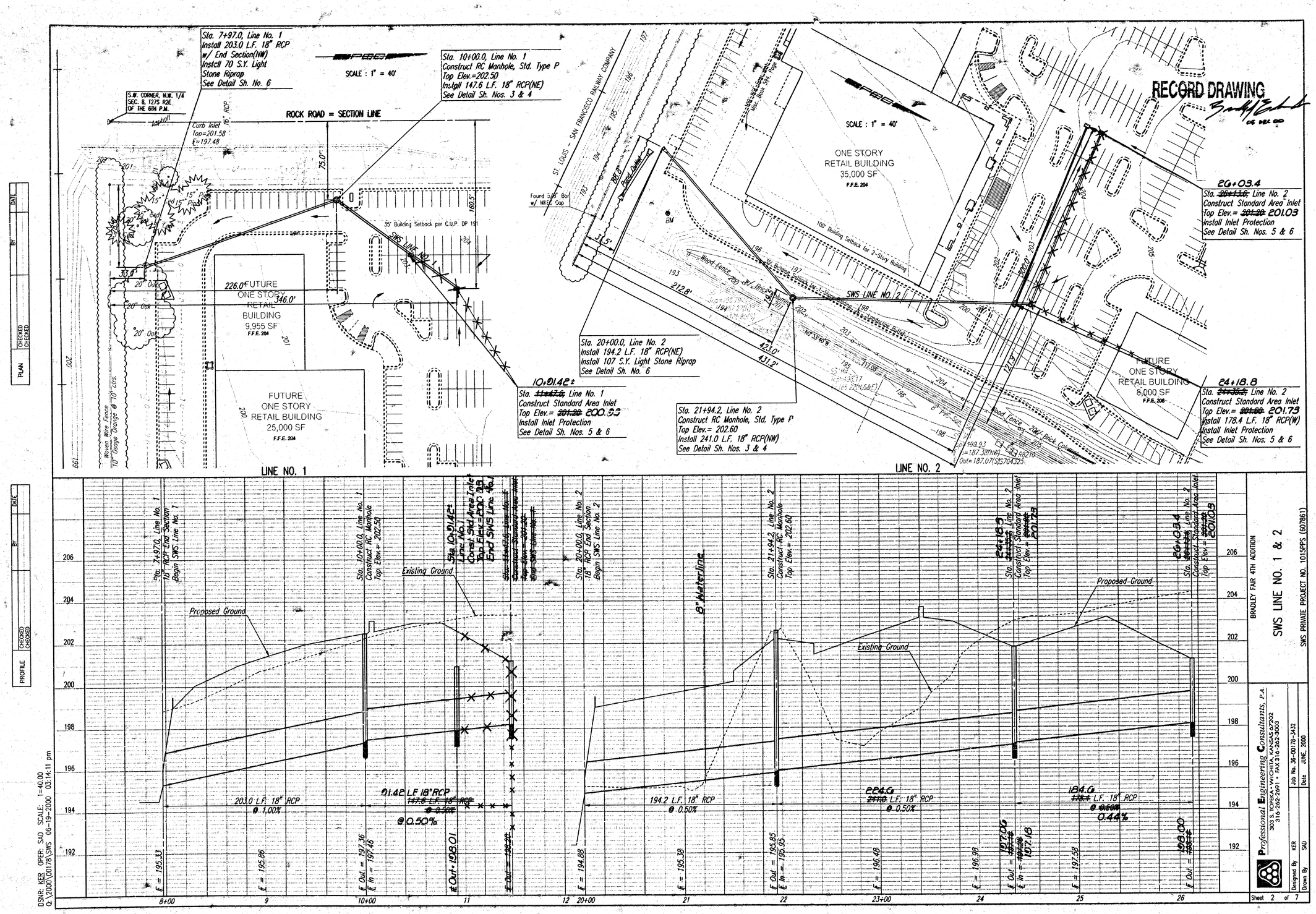

PLAN | CHECKED | CHECKED | BY | DATE

PROFILE | CHECKED | CHECKED | BY | DATE

DSNR: KER OPER: SAD SCALE: 1=40.00
Q:\2000\00178\SWS 06-19-2000 03:14:11 pm

BRADLEY FAIR 4TH ADDITION

SWS LINE NO. 1 & 2

SWS PRIVATE PROJECT NO. 1015PPS (607861)

Professional Engineering Consultants, P.A.
303 S. TOPEKA • WICHITA, KANSAS 67202
316-262-2691 • FAX 316-262-3003

Designed By KER | Job No. 36-00178-3432
Drawn By SAD | Date JUNE, 2000

SHEET NO.	TOTAL SHEETS
3	7

FUTURE ONE STORY RETAIL BUILDING 9,955 SF
F.F.E. 204

FUTURE ONE STORY RETAIL BUILDING 25,000 SF
F.F.E. 204

ONE STORY RETAIL BUILDING 35,000 SF
F.F.E. 204

100' KGE Easement
Misc. Book 3444 Page 569

SWS Line No. 1

SWS Line No. 2

6" PVC San. Sew.

Wood Fence

12" Brick Columns

00.13' 15" Pine

15" Pine

10" Oak

15" Ced

20" Oak

99.48

98.58

98.41

01.48

98.04

97.47

00.92

98.07

97.34

00.57

97.89

96.81

00.33

95.65

95.45

99.96

97.29

93.76

99.50

94.41'

81.4'

99.48

92.54

92.13

92.18

92.14

99.52

95.09

94.84

98.23

94.71

92.67

94.53

93.80

92.67

93.24

93.46

92.90

90.96

92.67

BM

Pond Outfall

Found 5/8" Bar w/ MKEC Cap

10" Osage Orange @ 10' ctrs.

Woven Wire Fence

N89°19'50"E 600'

ST. LOUIS - SAN FRANCISCO RAILWAY COMPANY

Install 342 L.F. Linear Sediment Barrier. See Storm Water Pollution Prevention Plan for Bradley Fair 4th Addition

GO Sta. 0+00.00, Pond Outfall
Install ~~58~~ L.F. 19"x30" RCPHE(NW) with End Sections
install 45 S.Y. Light Stone Riprap

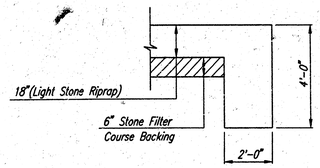

TYPICAL SECTION THRU TOEWALL
NO SCALE

NOTES

1. ALL RIPRAP FOR THIS PROJECT SHALL BE NATURAL STONE. NEITHER BROKEN CONCRETE, FABRIC ENVELOPE, NOR PREMIXED DRY PACKAGED CONCRETE BAG ALTERNATES WILL BE ALLOWED.
2. TOEWALLS SHALL BE INSTALLED ALONG ALL EDGES OF STONE RIPRAP.
3. GROUTING OF THE SURFACE OF THE RIPRAP SHALL NOT BE PERFORMED. GROUTING OF THE TOEWALLS SHALL BE PERFORMED PER CITY SPECIFICATIONS.

LEGEND

- FLOW DIRECTION
- 193.50 FLOWLINE ELEVATION
- 200 EXISTING CONTOUR
- 200 PROPOSED CONTOUR
- LIGHT STONE RIPRAP
- LINEAR SEDIMENT BARRIER

B.M. #3: RAILROAD SPIKE IN NORTH FACE OF NORTH POLE TO HIGHLINE "H" STRUCTURE EAST OF ROCK ROAD AND SOUTH OF BRADLEY FAIR ST.
ELEV.=196.17

RECORD DRAWING
OF DEC 00

SCALE : 1" = 20'

BRADLEY FAIR 4TH ADDITION

DETENTION BASIN

SWS PRIVATE PROJECT NO. 1015PPS (607861)

Professional Engineering Consultants, P.A.
303 S. TOPEKA • WICHITA, KANSAS 67202
316-262-2691 • FAX 316-262-3003

Designed by	KER	Checked by	
Drawn by	SAD	Date JUNE, 2000	Job No. 00178

DSNR: KER OPER: SAD SCALE: 1=20.00
R:\2000\00178\outlet 06-19-2000 9:03:18.34 pm

SEWER APPURTENANCES DETAILS

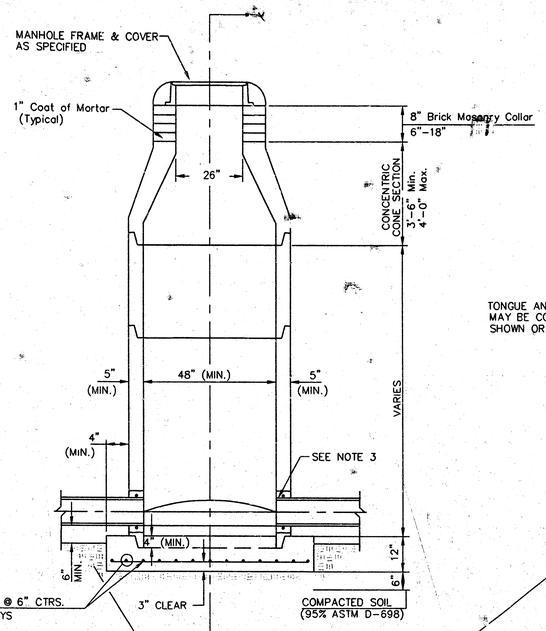

TYPE P STANDARD MANHOLE

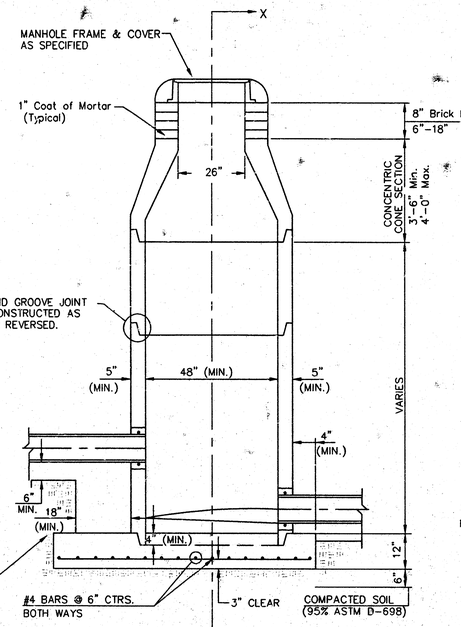

TYPE P INSIDE DROP MANHOLE

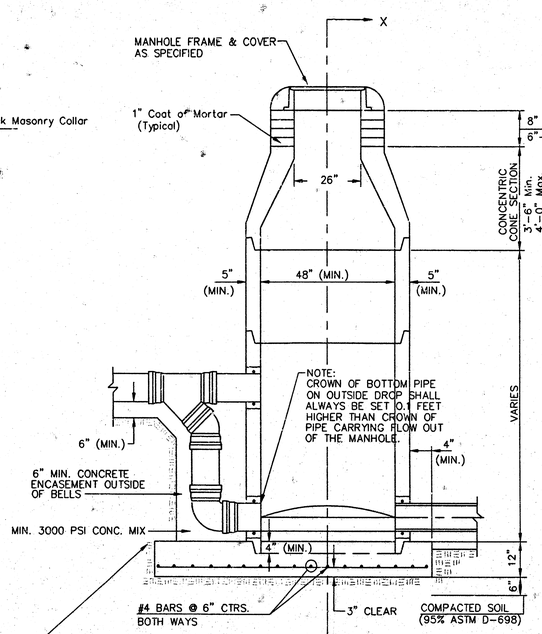

TYPE P OUTSIDE DROP MANHOLE

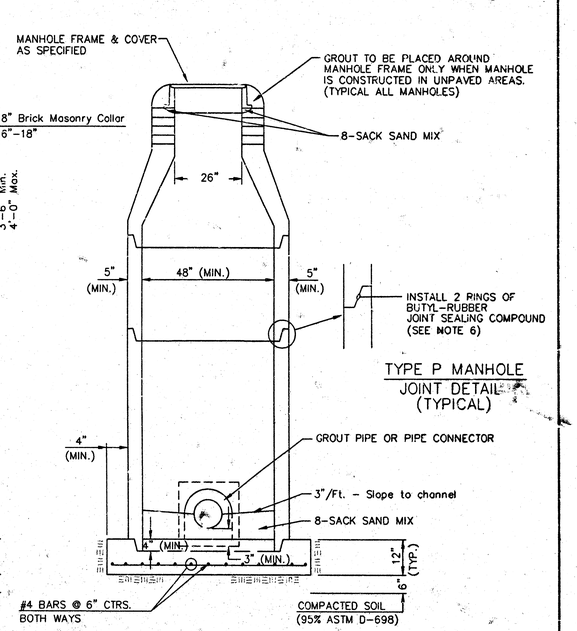

SECTION X (TYPICAL)

GENERAL NOTES

PRECAST MANHOLE NOTES

1. ALL PRECAST CONCRETE MANHOLE SECTIONS SHALL CONFORM TO THE LATEST REVISIONS OF A.S.T.M. C478 AS MODIFIED BY THE SPECIFICATIONS.
2. NON-SHRINK GROUT SHALL BE NON-METALLIC TYPE.
3. ~~APPROVED FLEXIBLE WATERSTOP GASKETS SHALL BE INSTALLED TO JOIN THE SEWER TO THE MANHOLE WALL WHEN A.B.S. COMPOSITE PIPE OR P.V.C. PIPE IS USED. FOR OTHER TYPES OF PIPE,~~ THE SEWER SHALL BE GROUTED IN PLACE WITH NON-SHRINK GROUT. ~~THE SEWER PIPE SHALL BE SUPPORTED WITH CONCRETE ENCASEMENT A MINIMUM OF 3 FEET FROM THE MANHOLE WALL AND TO THE FIRST JOINT FOR V.C.P. SUCH THAT THE JOINT REMAINS FLEXIBLE.~~
4. ~~ALL INSIDE SURFACES OF THE CONCRETE MANHOLE WHICH WOULD BE EXPOSED TO SEWER GAS SHALL BE COATED WITH 2 COATS THEMEC SERIES 65 HI-BUILD EPOXOLINE, DRY THICKNESS OF 8 MILS (MIN.)~~
5. ~~EXTERIOR MANHOLE WALLS SHALL BE COATED WITH 1 COAT MODILARMA 633 BITUMINOUS COATING.~~
6. ~~JOINT SEALING COMPOUND SHALL BE KENT SEAL NO. 2 OR APPROVED EQUAL.~~
7. PRECAST MANHOLES SHALL BE SET AT LEAST 4 INCHES INTO THE MANHOLE BASE.
8. TOP OF MANHOLE FLOOR SLAB SHALL BE AT LEAST 3 INCHES BELOW THE FLOW LINE OF THE OUTLET PIPE TO INSURE SUFFICIENT MINIMUM THICKNESS OF SHAPED INVERT.
9. LIFTING HOLES SHALL BE FILLED WITH NON-SHRINK GROUT. ~~AND THE INTERIOR SURFACE COATED AS SPECIFIED.~~
10. MORTAR USED IN MASONRY CONSTRUCTION SHALL CONTAIN 8 SACKS OF CEMENT PER CUBIC YARD. CONCRETE USED IN MANHOLE BASES SHALL CONFORM TO THE REQUIREMENTS OF CONCRETE FOR CONCRETE PAVEMENT CONSTRUCTION AS SPECIFIED IN THE CITY STANDARD PAVING SPECIFICATIONS USING CITY CONCRETE PAVEMENT MIX WITHOUT AIR ENTRAINING ADMIXTURE. MORTAR SHALL BE PLACED AROUND THE MANHOLE RING AS SHOWN ON THE DRAWINGS WHEN MANHOLES ARE CONSTRUCTED IN UNPAVED AREAS. MANHOLES CONSTRUCTED WHERE PIPE SIZES ARE SMALLER THAN 24" SHALL HAVE AN INSIDE DIAMETER OF 4'. MANHOLES CONSTRUCTED WHERE PIPE SIZES ARE 24" OR LARGER SHALL HAVE AN INSIDE DIAMETER OF 5'. COMPLETED MANHOLE SHALL BE WITHOUT LEAKS AND WATER TIGHT.
11. REINFORCING STEEL SHALL BE INSTALLED IN THE MANHOLE BASES AND SHALL CONSIST OF NO. 4 BARS PLACED ON 6" CENTERS IN BOTH DIRECTIONS. THE MANHOLE BASE REINFORCEMENT SHALL BE PLACED AT LEAST 3" ABOVE THE BOTTOM OF THE MANHOLE BASE. ~~ALL COSTS FOR FURNISHING AND INSTALLING REINFORCING STEEL SHALL BE INCLUDED IN THE UNIT PRICE BID FOR THE MANHOLE.~~
12. OPENINGS SHALL BE CUT INTO THE MANHOLE WALL WHEN OUTSIDE DROPS ARE CONSTRUCTED ON EXISTING MANHOLES. SUCH OPENINGS CUT INTO EXISTING MANHOLES SHALL BE AS SMALL AS PRACTICAL TO FACILITATE INSTALLING AND GROUTING THE NEW PIPE IN PLACE. WATERSTOP GASKETS SHALL BE USED WITH P.V.C. AND A.B.S. COMPOSITE PIPE. THE NEW PIPE SHALL BE GROUTED INTO THE OPENING USING AN APPROVED NONSHRINK GROUT FOR THE FULL MANHOLE WALL THICKNESS. ~~THE EXTERIOR OF THE COMPLETED CONNECTION SHALL BE SEALED WITH AN APPROVED BITUMINOUS COATING SUCH THAT THE CONNECTION WILL BE WATER TIGHT.~~ FLOOR OF MANHOLE SHALL BE MODIFIED TO FORM NEW FLOW CHANNEL FOR THE NEW CONNECTION AS INDICATED BY THE DRAWING. ~~THIS WORK, INCLUDING MODIFICATION OF MANHOLE FLOOR, SHALL BE PAID FOR AT THE UNIT PRICE BID FOR OUTSIDE DROP STACK CONSTRUCTED ON EXISTING MANHOLE.~~
13. THE FLOORS OF ALL MANHOLES SHALL BE SHAPED WITH FLOW CHANNELS SUCH THAT THE MANHOLES WILL BE SELF CLEANING AND FREE OF AREAS WHERE SOLIDS COULD BE DEPOSITED AS SEWAGE FLOWS THROUGH THE MANHOLE FROM ALL INLET PIPES TO THE OUTLET PIPE. FLOW CHANNELS SHALL BE FORMED TO MATCH THE BOTTOM HALVES OF THE INFLOWING PIPES AND THE OUTFLOWING PIPE AS SHOWN BY THE DRAWINGS EXCEPT FOR INSIDE DROP MANHOLES. FLOW CHANNELS FOR INSIDE DROP MANHOLES SHALL BE CONSTRUCTED AS INDICATED BY THE DRAWING. MANHOLE FLOORS SHALL HAVE SLOPES OF 3 INCHES PER FOOT IN THE AREAS OUTSIDE OF THE FLOW CHANNELS SLOPED TOWARD THE FLOW CHANNELS. PIPES LAID THROUGH MANHOLES SHALL HAVE THE TOP HALF REMOVED TO NEAT LINES FOR THE FULL INSIDE DIAMETER OF THE MANHOLE. MANHOLE FLOORS SHALL THEN BE SHAPED AROUND THE BOTTOM HALF OF THE PIPE WHICH FORMS THE FLOW CHANNEL.
14. PIPES INSTALLED WITHIN THE EXCAVATION MADE FOR THE MANHOLE SHALL BE CRADLED WITH CONCRETE TO THE LIMITS OF THE MANHOLE EXCAVATION. WHEN CLAY PIPE IS USED, THE CRADLE SHALL EXTEND TO THE FIRST JOINT OUTSIDE THE MANHOLE. THE CRADLE SHALL BE TERMINATED AT THE CLAY PIPE JOINT IN A MANNER WHICH WILL MAINTAIN THE FLEXIBILITY OF THE JOINT. ~~COST OF CRADLE WITHIN MANHOLE EXCAVATION OR TO CLAY PIPE JOINTS ADJACENT TO MANHOLE SHALL BE INCLUDED IN THE UNIT PRICE BID FOR THE MANHOLE.~~
15. MANHOLE COVER CASTINGS AND MANHOLE FRAME CASTINGS SHALL CONFORM TO THE REQUIREMENTS AS INDICATED IN THE STANDARD SPECIFICATIONS AND AS SHOWN IN THE STANDARD DETAIL DRAWING.
16. THE VERTICAL DROP IN INSIDE DROP MANHOLES SHALL NOT EXCEED 2' FOR INFLOWING PIPES SIZED 12" OR SMALLER AND 2' FOR INFLOWING PIPES LARGER THAN 12". THE CROWNS OF INFLOWING PIPES SHALL NEVER BE SET LOWER THAN THE CROWN OF THE OUTFLOWING PIPE.
17. ~~STANDARD MANHOLES AND STANDARD INSIDE DROP MANHOLES SHALL BE BID AS STANDARD MANHOLES FOR THE TYPE AND DIAMETER INDICATED. OUTSIDE DROP MANHOLES SHALL BE BID AS STANDARD OUTSIDE DROP MANHOLES FOR THE TYPE AND DIAMETER INDICATED.~~ ALL MANHOLE DIAMETERS WILL BE 4' UNLESS INDICATED OTHERWISE.
18. A BRICK MASONRY COLLAR SHALL BE INSTALLED BETWEEN THE CAST IRON FRAME AND THE CONCENTRIC CONE. THE COLLAR WILL HAVE 8" WALLS AND A VERTICAL HEIGHT OF 6" MINIMUM AND 18" MAXIMUM. A 1" COAT OF MORTAR WILL BE PLASTERED ON THE OUTSIDE OF THE COLLAR. THE USE OF PRE-CAST CONCRETE SPACERS FOR MANHOLE TOP ADJUSTMENT IS ALSO ALLOWED.

RECORD DRAWING
05 DEC 00

DSNR: KER OPER: SAD SCALE: 1=1.00
Q:\2000\0078\ROM\anhole 06-19-2000 03:36:16 pm

THE CITY OF WICHITA

CITY ENGINEER'S OFFICE
CITY HALL - SEVENTH FLOOR
455 NORTH MAIN STREET
WICHITA, KANSAS 67202
(316) 268-4501
(316) 268-4174 FAX

STANDARD TYPE 'P' MANHOLES

M. E. LINDEBAK P.E. - CITY ENGINEER

PROJECT NUMBER	OCA NO.
XXX-XXXXX	XXXXXX
DATE	SHEET 4 OF 7
MAR 96	

SHEET NO.	TOTAL SHEETS
5	7

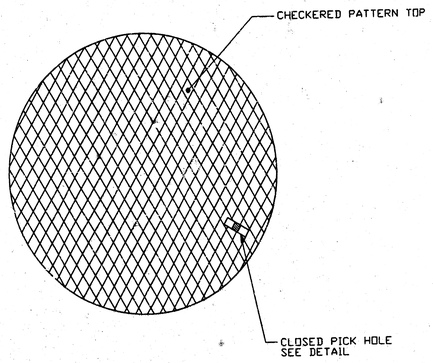

TOP VIEW

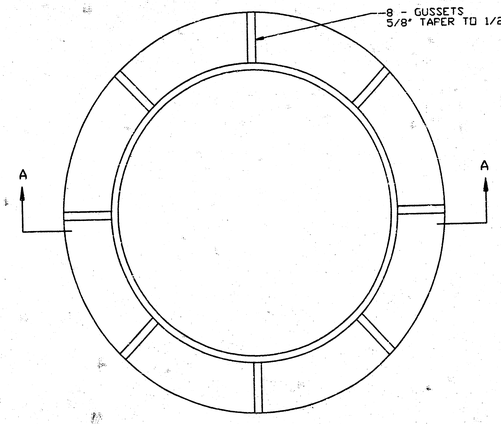

TOP VIEW

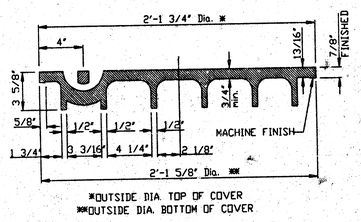

*OUTSIDE DIA. TOP OF COVER
**OUTSIDE DIA. BOTTOM OF COVER

SECTION VIEW

MANHOLE COVER

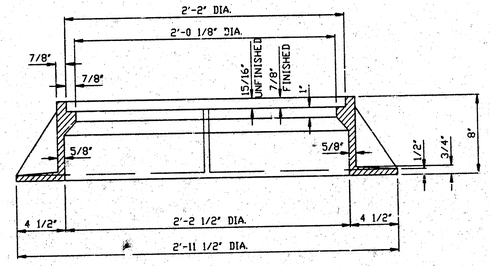

SECTION A-A

CAST IRON MANHOLE FRAME

MANHOLE FRAME AND COVER NOTES

1. CAST IRON MANHOLE FRAME AND COVER SHALL CONFORM TO ASTM A-48, CLASS 30, OR BETTER.
2. THE FRAMES AND COVERS SHALL BE OF A NONROCKING TYPE OR WITH MACHINED BEARING SURFACES SO FITTING PARTS WILL NOT RATTLE OR ROCK UNDER TRAFFIC.
3. ~~ALL MANHOLE CASTINGS, REGARDLESS OF TYPE, SHALL BE CONSIDERED SUBSIDIARY TO THE UNIT PRICES BID FOR THE VARIOUS MAN HOLE AND INLET TYPES.~~
4. GRIND ALL BURRS SMOOTH, CLEAN THOROUGHLY, THEN APPLY SHOP COAT OF ASPHALT BASE PAINT.
5. ~~THE MANUFACTURER SHALL SUBMIT SHOP DRAWINGS TO THE ENGINEER FOR APPROVAL PRIOR TO MANUFACTURE. THE ENGINEER SHALL RETAIN THE RIGHT TO REJECT CASTINGS NOT CONFORMING TO THE SPECIFI CATIONS OR THE APPROVED SHOP DRAWINGS.~~

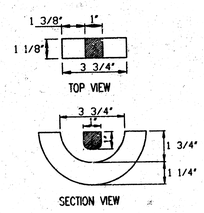

PICK HOLE DETAIL

RECORD DRAWING
08 DEC 00

BRADLEY FAIR 4TH ADDITION

MANHOLE FRAME AND COVER

Professional Engineering Consultants, P.A.
303 S. TOPEKA • WICHITA, KANSAS 67202
316-262-2691 • FAX 316-262-3003

Designed by	BER	Checked by	
Drawn by	DEP	Date JUNE, 2000	Job No. 00178

SHEET NO.	TOTAL SHEETS
6	7

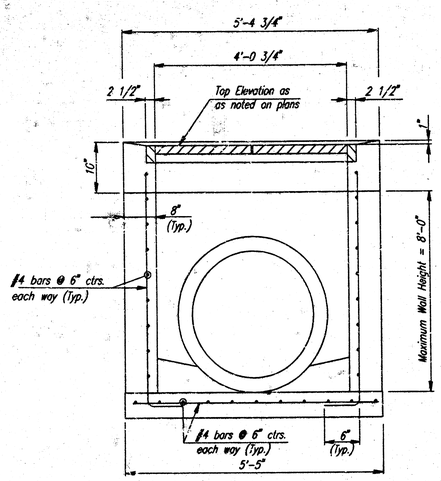

SECTION A-A

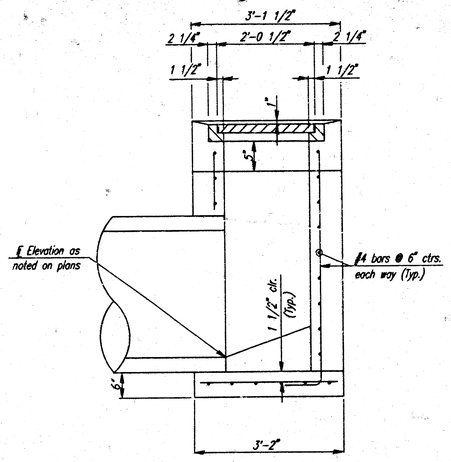

SECTION B-B

STANDARD AREA INLET

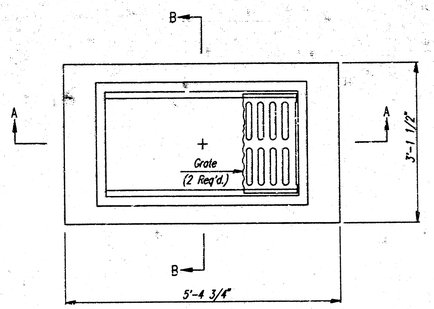

PLAN

GENERAL NOTES

CONCRETE SHALL HAVE A MINIMUM 28 DAY COMPRESSIVE STRENGTH OF 4000 PSI. ALL PIPES SHALL BE FLUSH CUT PRIOR TO BEING CAST INTO WALLS.

REINFORCING STEEL SHALL BE GRADE 60, A.S.T.M. A615. ALL DIMENSIONS RELATIVE TO PLACEMENT OF REINFORCING ARE TO THE CENTERLINE OF BARS UNLESS OTHERWISE NOTED.

INLET CASTINGS SHALL BE MANUFACTURED USING DUCTILE IRON CONFORMING TO ASTM A536-80 GRADE 65-45-12. DIMENSIONS AND WEIGHTS SHOWN ON THE DETAILED DRAWINGS SHALL BE CONSIDERED AS MINIMUM REQUIREMENTS AND ANY DEVIATIONS FROM THE DIMENSIONS SHOWN MUST BE SPECIFICALLY APPROVED. THE FINISHED CASTINGS SHALL BE OF UNIFORM QUALITY, FREE FROM BLOWHOLES, POROSITY, HARD SPOTS, SHRINKAGE DISTORTIONS OR OTHER DEFECTS.

INLET FLOOR SHALL BE SHAPED WITH UNREINFORCED CONCRETE (8 SACK SAND MIX) TO CREATE FLOW CHANNELS AND TO INCREASE HYDRAULIC EFFICIENCY SUCH THAT THE INLET WILL BE SELF CLEANING BETWEEN ALL INLET AND/OR OUTLET PIPES.

PIPES ENTERING EXISTING STRUCTURE SHALL BE CENTERED ON INSIDE FACE OF WALL.

ALL EXPOSED STRUCTURAL STEEL SHALL BE PAINTED WITH A COAT OF INORGANIC ZINC PRIMER AND THEN WITH A TOP COAT OF OR A FIELD COAT OF ORGANIC ZINC, EACH COAT TO BE 3 TO 4 MILS. STRUCTURAL STEEL USED TO FABRICATE THE SPECIAL AREA INLET FRAME SHALL COMPLY WITH A.S.T.M. A36. WELDING SHALL COMFORM TO THE STRUCTURAL WELDING CODE A.W.S. D1.1-88.

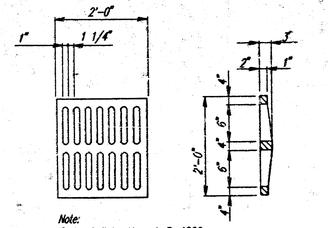

Note:
Grate shall be Neenah R-4826 or approved equal.

GRATE DETAIL
(Wt.=190 lbs.)
(2 Required)

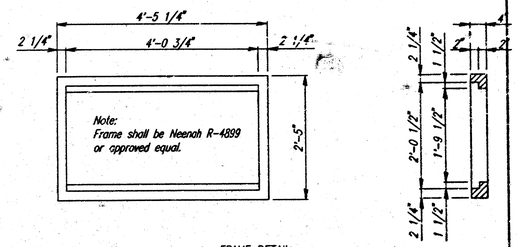

FRAME DETAIL
(Wt.=440 lbs.)

Note:
Frame to mate with 2 Neenah R-4826 Grates or approved equal.

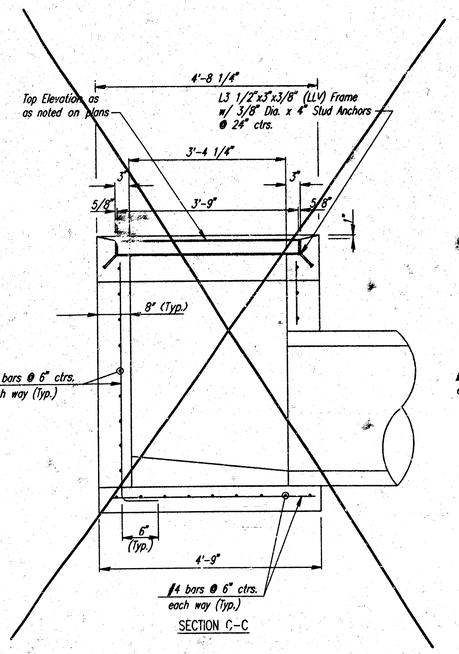

SECTION C-C

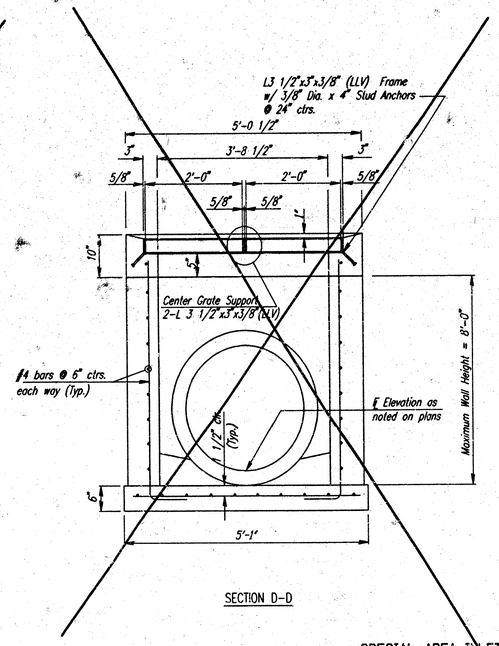

SECTION D-D

SPECIAL AREA INLET

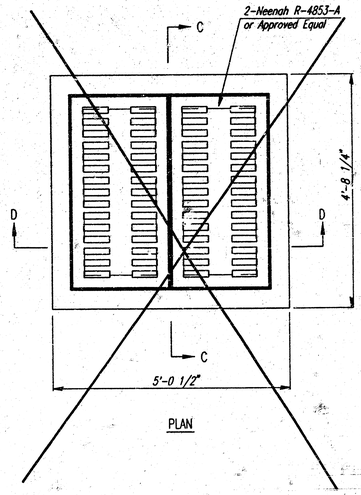

PLAN

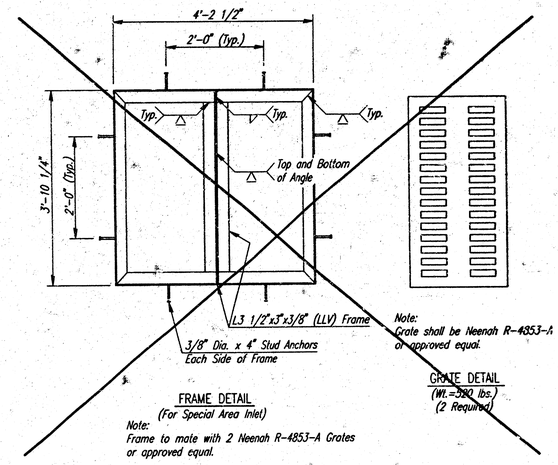

FRAME DETAIL
(For Special Area Inlet)

Note:
Frame to mate with 2 Neenah R-4853-A Grates or approved equal.

Note:
Grate shall be Neenah R-4853-A or approved equal.

GRATE DETAIL
(Wt.=590 lbs.)
(2 Required)

RECORD DRAWING
8.22.00

BRADLEY FAIR 4TH ADDITION

STANDARD AREA INLET

SWS PRIVATE PROJECT NO. 1015PPS (607861)

Professional Engineering Consultants, P.A.
303 S. TOPEKA • WICHITA, KANSAS 67202
316-262-2691 • FAX 316-262-3003

Designed by	RWA	Checked by	
Drawn by	DEP	Date JUNE, 2000	Job No. 00178

SHEET NO.	TOTAL SHEETS
7	7

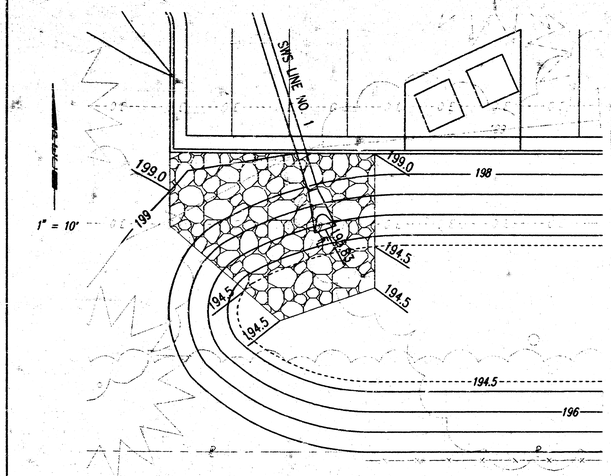

SWS LINE NO. 1 OUTFALL

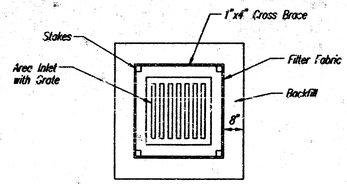

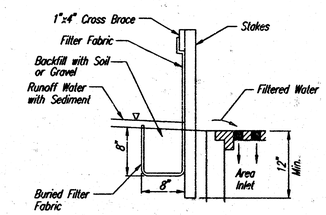

AREA INLET PROTECTION
FILTER FABRIC

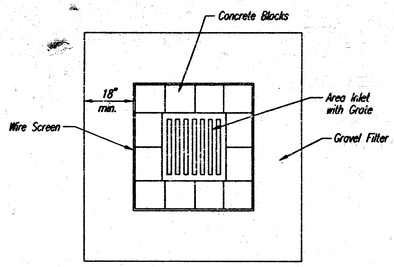

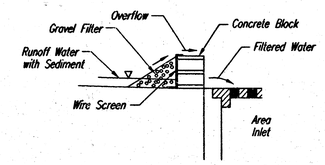

AREA INLET PROTECTION
BLOCK AND GRAVEL FILTER

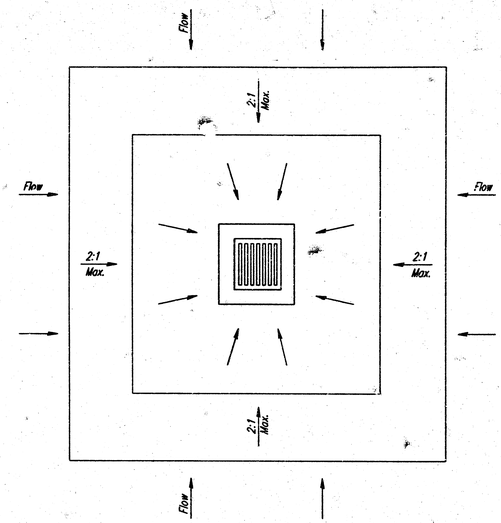

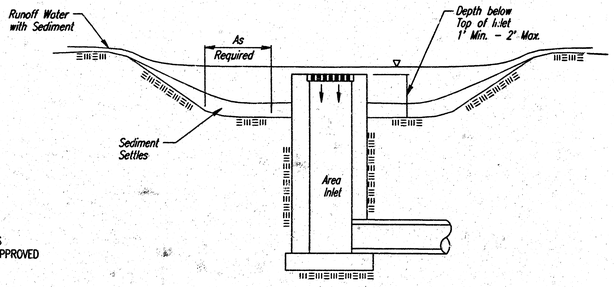

AREA INLET PROTECTION
EXCAVATED AREA INLET
SEDIMENT TRAP

ADAPTED FROM: VIRGINIA SOIL AND WATER CONSERVATION COMISSION, 1985 AND DRAINAGE CRITERIA MANUAL, DENVER URBAN DRAINAGE AND FLOOD CONTROL DISTRICT 9-1-92

NOTE: INLET SIZE MAY VARY FROM THAT SHOWN.

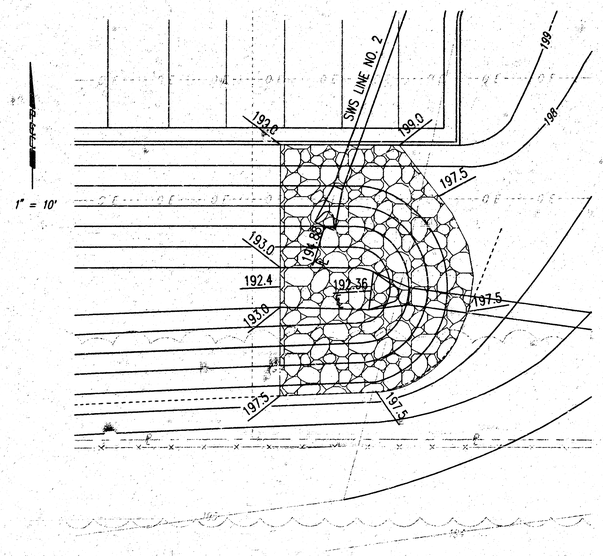

SWS LINE NO. 2 OUTFALL

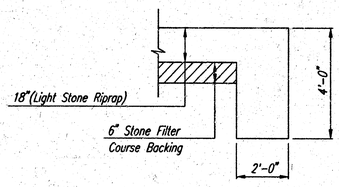

TYPICAL SECTION THRU TOEWALL
NO SCALE

NOTES

1. ALL RIPRAP FOR THIS PROJECT SHALL BE NATURAL STONE. NEITHER BROKEN CONCRETE, FABRIC ENVELOPE, NOR PREMIXED DRY PACKAGED CONCRETE BAG ALTERNATES WILL BE ALLOWED.
2. TOEWALLS SHALL BE INSTALLED ALONG ALL EDGES OF STONE RIPRAP.
3. GROUTING OF THE SURFACE OF THE RIPRAP SHALL NOT BE PERFORMED. GROUTING OF THE TOEWALLS SHALL BE PERFORMED PER CITY SPECIFICATIONS.

GENERAL NOTES
INLET PROTECTION

1. INLET PROTECTION METHOD MAY BE ANY OF THE APPLICABLE TYPES SHOWN, A KDOT EROSION CONTROL DETAIL OR OTHER ENGINEER APPROVED METHOD, AT THE CONTRACTORS OPTION.
2. GRAVEL FILTER SHALL BE A DURABLE, WELL-GRADED SAND-GRAVEL OR CRUSHED STONE, MAXIMUM 1-1/2 IN. SIZE. AS AN ALTERNATE GRAVEL FILLED BAGS OF BURLAP OR OTHER FABRIC MAY BE USED. WHERE BAGS ARE USED, THE WIRE SCREEN, WHERE SHOWN, MAY BE OMITTED.
3. FILTER FABRIC, WHERE USED, SHALL BE RESISTANT TO ULTRAVIOLET LIGHT. MATERIALS MAY BE SUPPLIED BY THE FOLLOWING MANUFACTURERS:

MIRAFI, INC.	-	100X
HOECHST FIBERS INDUSTRIES	-	TREVIRA 1115
EXXON	-	TYPAR 3301 W

MATERIALS SUPPLIED BY THE ABOVE NAMED MANUFACTURERS SHALL BE ACCEPTED UPON VISUAL INSPECTION BY THE ENGINEER. OTHER COMPARABLE MATERIALS MAY BE USED IF APPROVED BY THE ENGINEER.

4. INLET PROTECTION SHALL BE ERECTED AS SOON AS THE STRUCTURE HAS BEEN BACKFILLED. MEASURES SHALL BE TAKEN TO PRECLUDE ENTRY OF SEDIMENT INTO THE STORM WATER SEWER SYSTEM DURING CONSTRUCTION OF THE STRUCTURE.
5. REMOVAL AND DISPOSAL OF ACCUMULATED SILT AND DEBRIS AND/OR REMOVAL AND RECONSTRUCTION OF INLET PROTECTION INSTALLATIONS SHALL BE PERFORMED THROUGHOUT THE PROJECT LIFE WHENEVER DEBRIS REACHES ONE-THIRD THE BARRIER HEIGHT, OR AS DEEMED NECESSARY BY THE ENGINEER. ULTIMATE REMOVAL AND DISPOSAL OF INLET PROTECTION AND DEBRIS WILL BE PERFORMED BY THE CONTRACTORS AFTER THE SITE HAS BEEN STABILIZED AND VEGETATION HAS 70 PERCENT DENSITY OF UNDISTURBED OR ADJACENT AREAS AT THE SITE.

RECORD DRAWING 08-08-00

BRADLEY FAIR 4TH ADDITION

SEDIMENT AND EROSION CONTROL STANDARD DETAILS AND INLET PROTECTION

Professional Engineering Consultants, P.A.
303 S. TOPEKA • WICHITA, KANSAS 67202
316-262-2691 • FAX 316-262-3003

Designed by	BER, GDD	Checked by	
Drawn by	DEP, KER	Date JUNE 2000	Job No. 00178

18 01 20 20