STORM WATER SEWER TO SERVE

Brush Creek 3rd Addition

LOT 4 & Part of LOT 3

Private Project Number

1078 PPS (607861)

CITY OF WICHITA, KANSAS

Michael E. Lindebak, P.E. City Engineer

January 2001

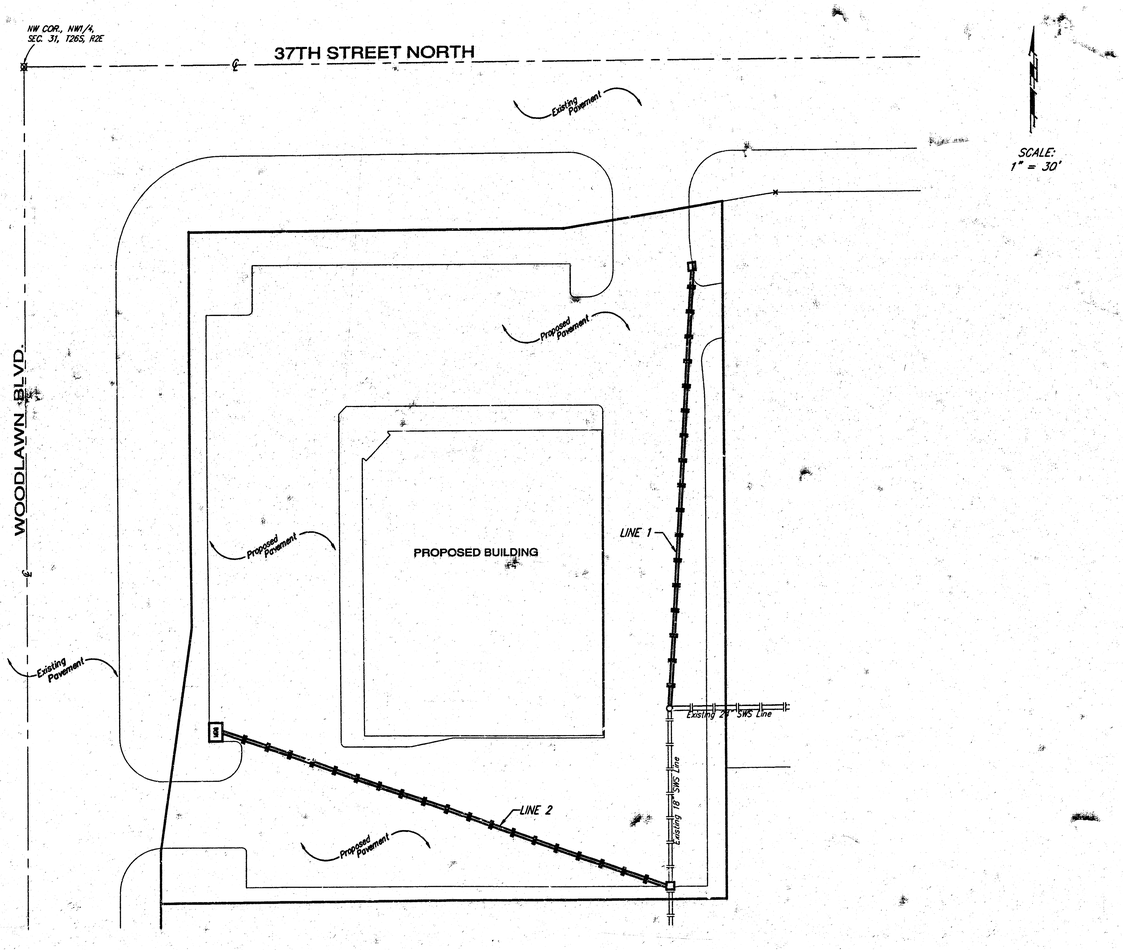

LEGAL DESCRIPTION:

Lot 4, together with the North 49' of Lot 3, Brush Creek 3rd Addition, Wichita, Sedgwick County, Kansas

BENCHMARK:

Woodlawn & 37th Street North
City of Wichita Bench Mark. Southeast corner of intersection.
75.7 feet East of centerline
56.3 feet South of centerline

Elevation: 183.04 City Datum

GENERAL NOTES:

1. Contractor will be required to provide notice to utility companies a minimum of forty-eight (48) hours prior to any excavation, as follows:

Kansas One-Call	687-2470

The Contractor must notify the following in case of an emergency:

Cox Communications	262-4270
Kansas Gas Service Company	383-8600
Kansas Gas & Electric Company	383-8650
Peoples Gas Company	942-7600
Southwestern Bell Telephone Company	1-571-2611
City of Wichita Water Department	268-4908
City of Wichita Sewer Department	268-4071

2. Utility service lines, poles, valve boxes, meters, et cetera are to be adjusted as necessary by others prior to construction unless the plans specifically call for their adjustment by the Contractor or unless the plans specifically identify a utility to be adjusted by its owner during construction. Existing utilities and their location, as shown on the plans represent the best information obtainable for design and shall be field verified. The contractor will be required to work around existing utilities within the right-of-way which do not conflict with proposed construction.

3. All disturbed areas not intended for pavement or sidewalk construction shall be seeded with Kansas Premium Fescue Blend at a rate of 8 lb./1000 Sq. Ft.

4. Trees and shrubs in public right-of-way which are in direct conflict with proposed new construction shall be removed by the Contractor with the Engineer's approval. Trees and shrubs which are not in direct conflict with proposed new construction shall be saved and protected from damage.

5. Contractor shall not start work on the project until the project inspector is assigned to the project and is present on the site. Any work done without inspection will be required to be uncovered for inspection.

6. Rubble from the removal of miscellaneous structures and excess excavation which is to be wasted shall be disposed of on sites to be provided by the Contractor. These sites shall be approved by the Engineer as to suitability, appearance and site location. Locations that, in the opinion of the Engineer, will leave an unsightly appearance will not be approved. All disposal sites must be approved by the Kansas Department of Health and Environment. Material either stockpiled or disposed of in a flood plain would require a Kansas State Board of Agriculture permit. Any material dumped in waters of the United States or wetlands is subject to U.S. Corps. of Engineers permitting regulations. Any material buried or stockpiled beyond approved construction limits would require additional archaeological investigations unless buried in a previously approved borrow location.

INDEX:

Cover	1
Plan/Profile Sheets	2-3
Drop Inlet Detail	4
Type-II Curb Inlet Detail	5
Copy Of Plat	6

BOOKED 4-11-01 MCS D-505

APPROVED AS NOTED
BY CITY ENGINEER OF WICHITA

Storm Sewers VRH 1/11/01

NOTE TO CONTRACTORS

Inspection and testing for this project is to be provided by a Licensed Consulting Engineering Firm under contract with the Owner/Developer. Said Inspection to be in accordance with the City of Wichita standard construction engineering practices and certified by a Licensed Professional Engineer. No work shall be performed in dedicated easements or public right-of-way by the Contractor without such inspection nor shall any work be commenced without written authorization by the City Engineer. All Construction and Materials shall comply with the City of Wichita Specifications and Standards (on file and available in the City Engineer's Office).

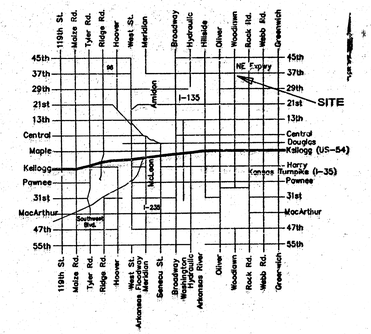

Vicinity Map

As Built 3/01 KK

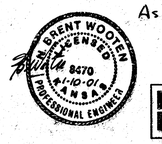

BAUGHMAN COMPANY P.A.
ENGINEERING, SURVEYING, & PLANNING
316-262-7271 • 315 ELLIS • WICHITA, KANSAS 67211

18-03-03-07

BENCHMARK:

Woodlawn & 37th Street North
City of Wichita Bench Mark. Southeast corner of intersection.
75.7 feet East of centerline
56.3 feet South of centerline

Elevation: 1283.04 City Datum

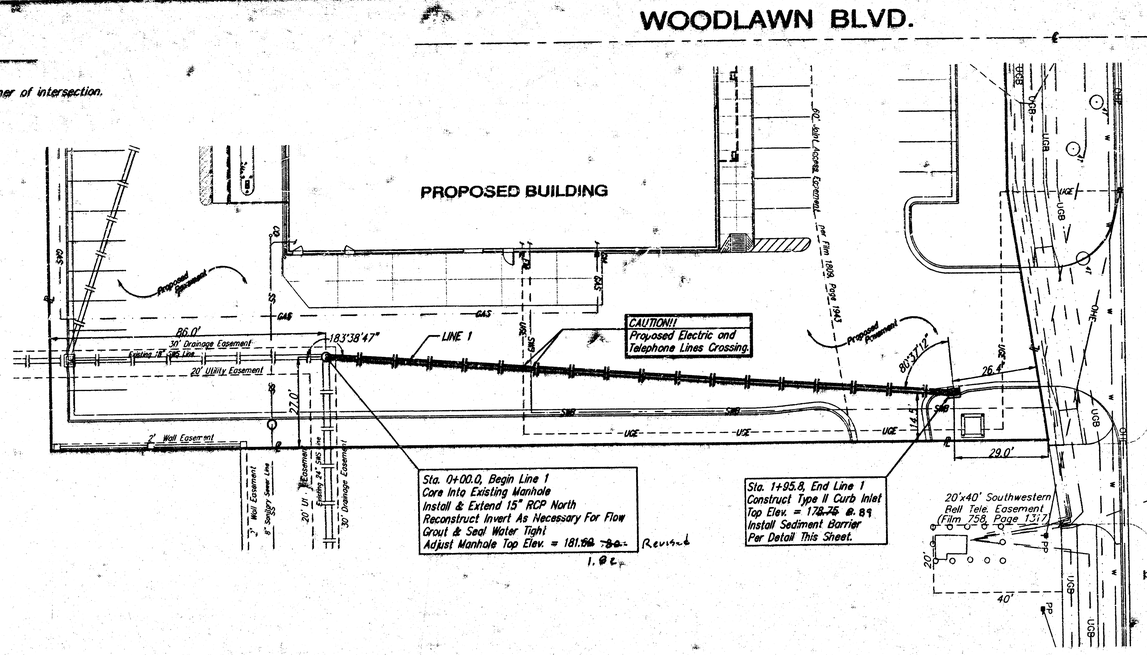

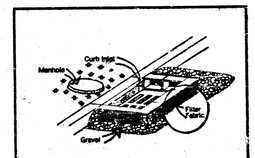

NOTES:
Frequent maintenance is required to remove sediment deposits and buildup.

Wrap filter fabric around all CMU block and backfill with 2"-3" gravel rock to allow sediment deposits.

DO NOT cover inlet or grate with filter fabric.

CURB INLET W/GRATE
SEDIMENT BARRIER DETAIL

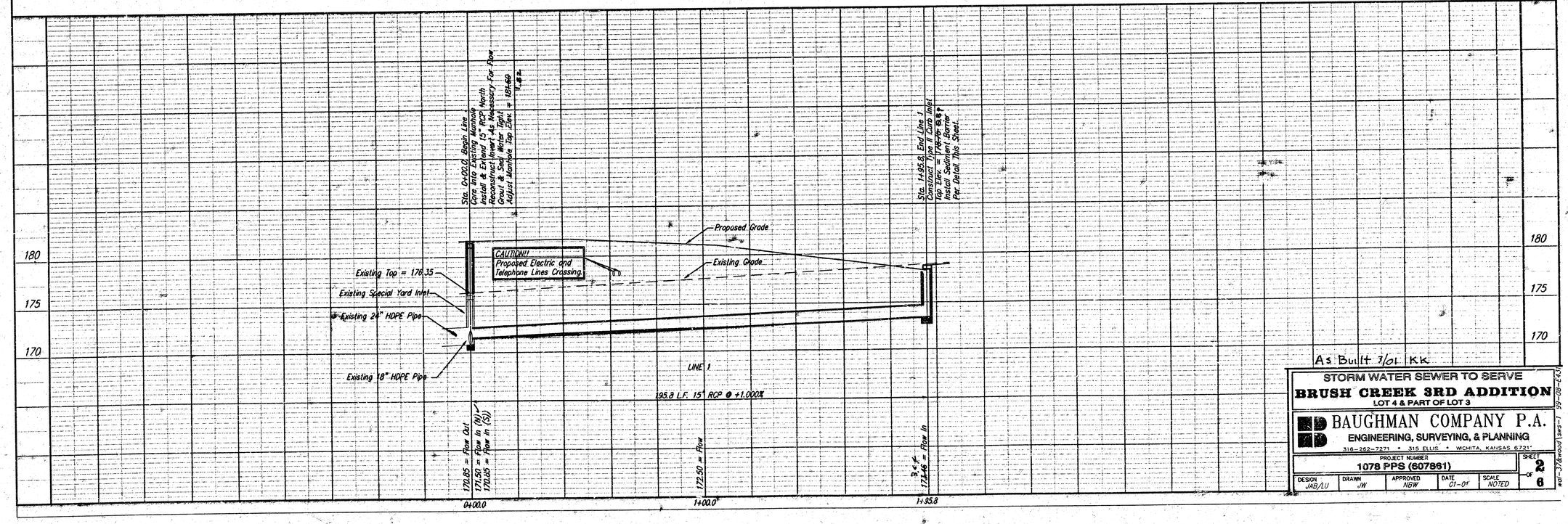

As Built 3/01 KK

STORM WATER SEWER TO SERVE
BRUSH CREEK 3RD ADDITION
LOT 4 & PART OF LOT 3

BAUGHMAN COMPANY P.A.
ENGINEERING, SURVEYING, & PLANNING
316-262-7271 • 315 ELLIS • WICHITA, KANSAS 67211

PROJECT NUMBER	SHEET
1078 PPS (607861)	2 of 6

DESIGN	DRAWN	APPROVED	DATE	SCALE
JAB/LU	JW	NSW	01-01	NOTED

w01-37thwood1.swg - 1-29-08-E.J.

BENCHMARK:

Woodlawn & 37th Street North
City of Wichita Bench Mark. Southeast corner of intersection.
75.7 feet East of centerline
56.3 feet South of centerline

Elevation: 183.04 City Datum

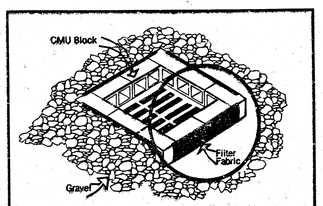

NOTES:

Frequent maintenance is required to minimize short-circuiting and to remove sediment deposits and buildup.

Wrap filter fabric around all CMU block and backfill with 2"-3" gravel rock to allow sediment deposits.

DO NOT cover inlet or grate with filter fabric.

INLET PROTECTION

Storm Drain with Gravel Apron

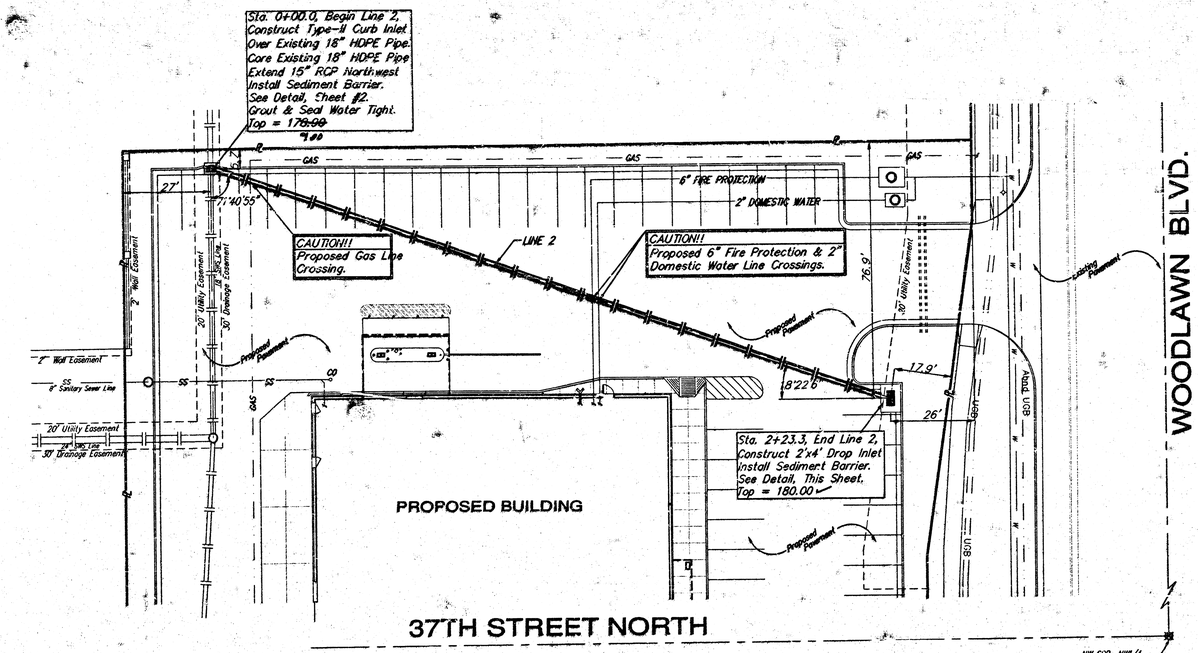

SCALE:
1" = 20' HORIZONTAL
1" = 5' VERTICAL

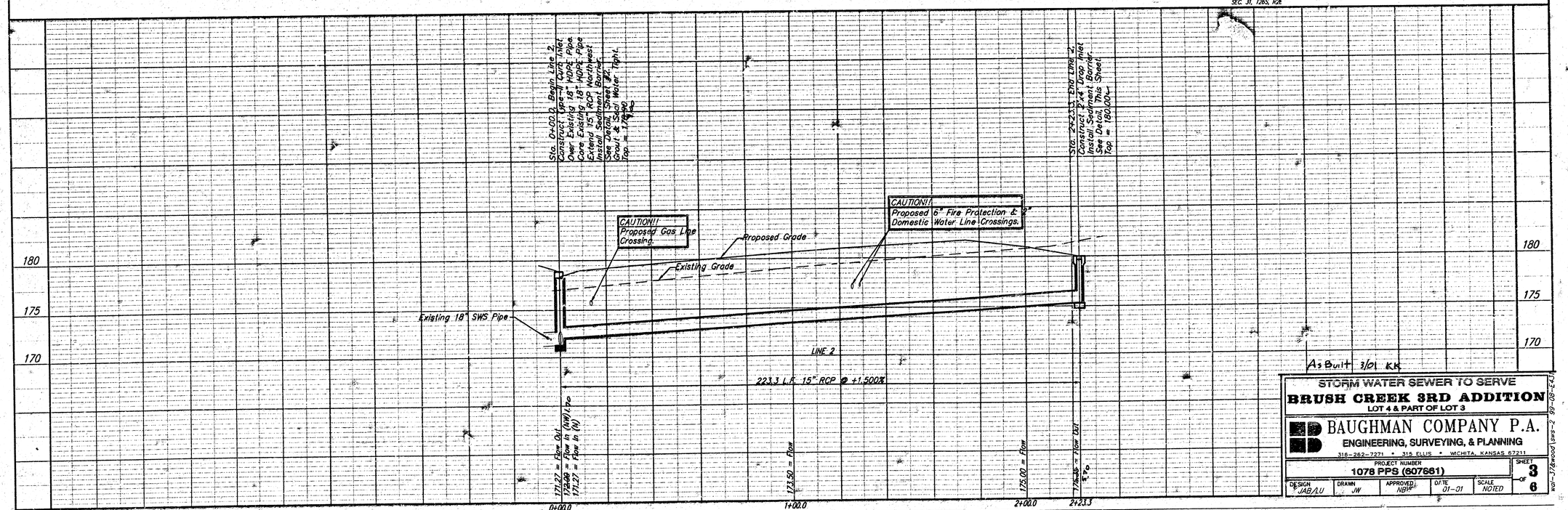

As Built 3/01 KK

STORM WATER SEWER TO SERVE
BRUSH CREEK 3RD ADDITION
LOT 4 & PART OF LOT 3

BAUGHMAN COMPANY P.A.
ENGINEERING, SURVEYING, & PLANNING
316-262-7271 • 315 ELLIS • WICHITA, KANSAS 67211

PROJECT NUMBER	SHEET
1078 PPS (607661)	3 OF 6

DESIGN	DRAWN	APPROVED	DATE	SCALE
JAB/LU	JW	NBH	01-01	NOTED

w:\1-37Atwood\pws-2 99-02-E43\

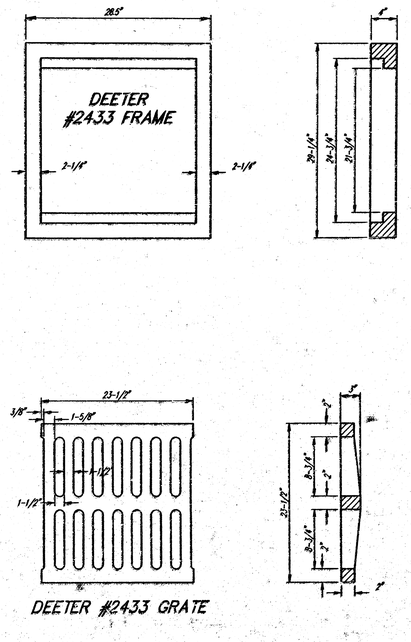

DEETER #2433 GRATE

NOTE: Grates shall be imprinted on the top surface with "CITY OF WICHITA" using letters at least 1" in height. Other marking methods may be approved by the engineer.

24" x 24" Frame and Grate Detail

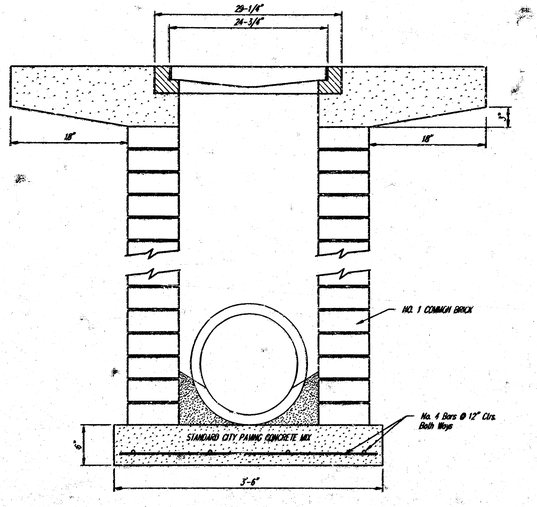

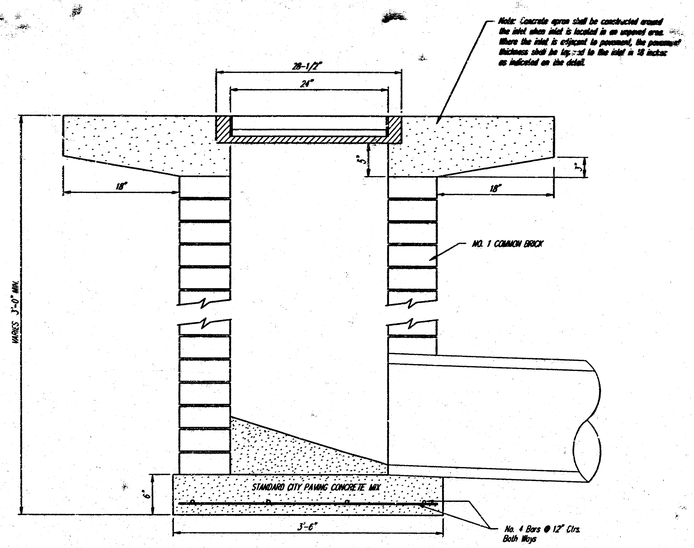

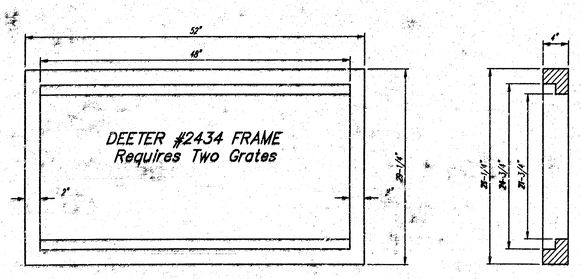

Double 24" x 24" Frame Detail

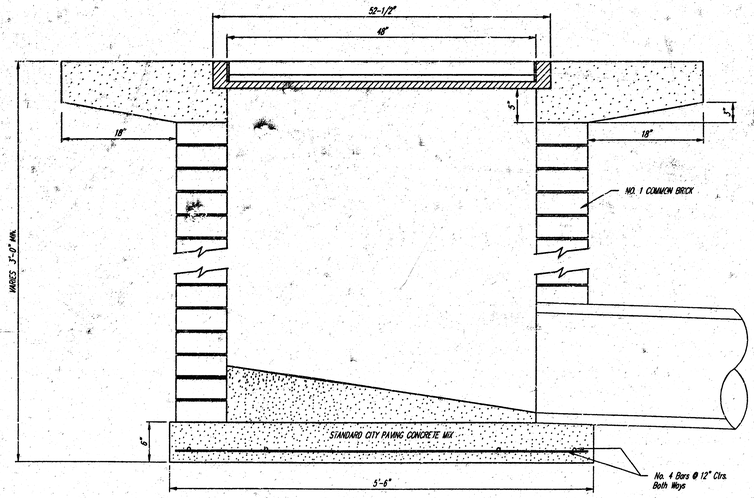

CITY OF WICHITA

STANDARD DROP INLET

BAUGHMAN COMPANY P.A.

ENGINEERING, SURVEYING, & PLANNING

316-262-7271 • 315 ELLIS • WICHITA, KANSAS 67211

PROJECT NUMBER					SHEET
1078 PPS (607861)					4 OF 6
DESIGN	DRAWN	APPROVED	DATE	SCALE	
STAFF	STAFF	NBW	01-01	NONE	

wol-37&wood\Drpinlt 99-08-E431

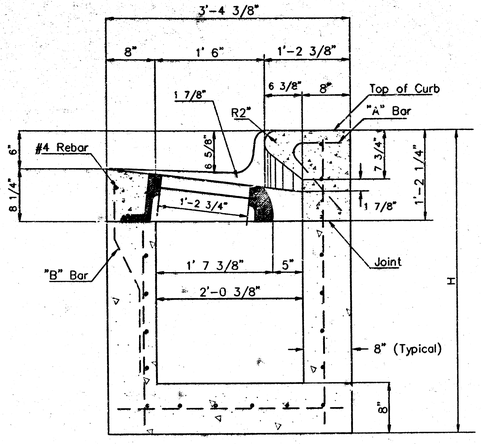

SECTION A-A

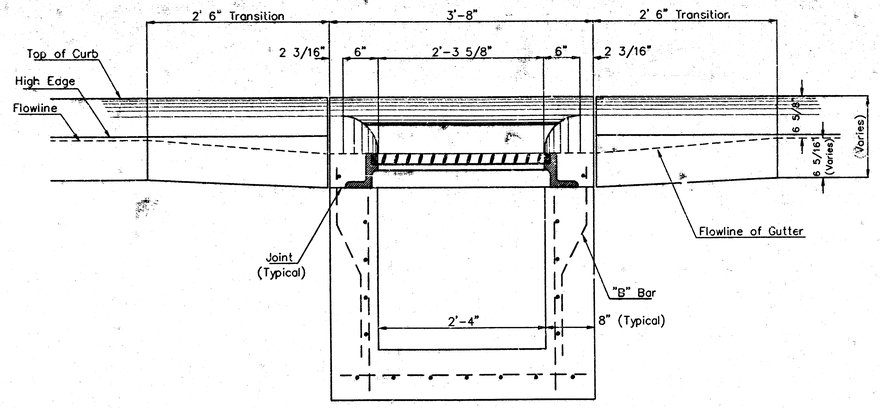

SECTION C-C

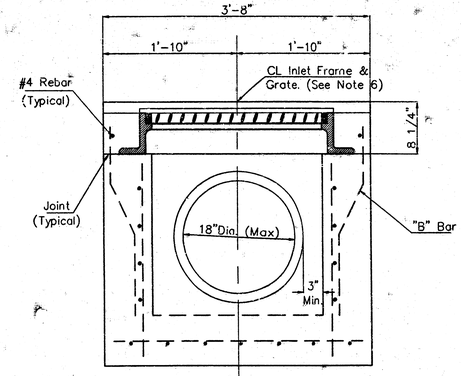

SECTION D-D

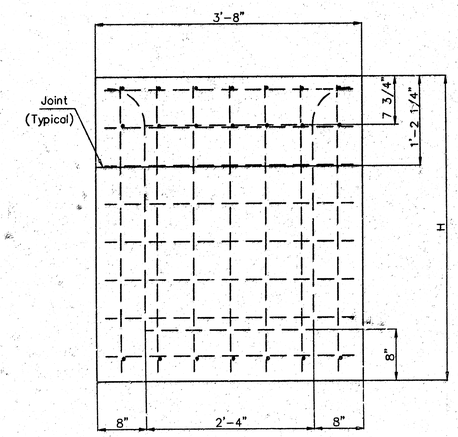

REAR WALL

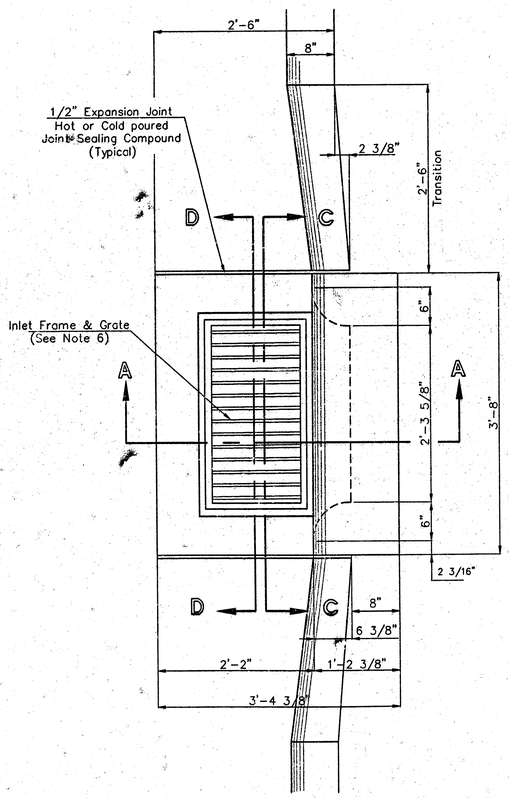

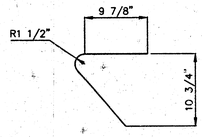

"A" Bar

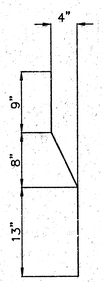

"B" Bar

General Notes

1. Use the concrete mix specified for the City of Wichita concrete pavement throughout. All exposed edges shall be finished with an edging tool. Reinforcing bars shall be bent around pipe.
2. Inlet invert shall be shaped with 8 sack mix concrete to create flow channels and to increase hydraulic efficiency such that the inlet will be self cleaning between all inlet and/or outlet pipes.
3. All bars are #4 with 6" spacing and shall have a minimum clearance of 1 1/2" inches unless otherwise noted on the plans.
4. When directed by the Engineer, a small opening may be required in the back of the inlet in order to drain a low area. Reinforcing bars will extend through the openings. No deductions in concrete quantities will be made for these openings.
5. No deductions will be made in pay length of curb, gutter, or curb and gutter through the inlet area.
6. Use Neenah R-3289 HV Single Inlet Frame and Grate or approved equal. Inlet frame to be proof load tested to 40,000 lbs. on unsupported side.
7. Reinforcing bars shall be cut or bent around pipes. No deduction in concrete quantities shall be made for pipe openings.
8. The vanes of the grate shall be oriented with respect to the flow arrows shown on the plans.

CITY OF WICHITA

STD. TYPE II CURB INLET

INLET OPENINGS - 6"x2"-3 5/8"

BAUGHMAN COMPANY P.A.

ENGINEERING, SURVEYING, & PLANNING

315-262-7271 • 315 ELLIS • WICHITA, KANSAS 67211

PROJECT NUMBER					SHEET
1078 PPS (607861)					5 OF 6
DESIGN Staff	DRAWN	APPROVED NBW	DATE 01-01	SCALE NONE	

wal-37&wood\Typ2 99-08-E431

BRUSH CREEK 3RD ADDITION

WICHITA, SEDGWICK COUNTY, KANSAS

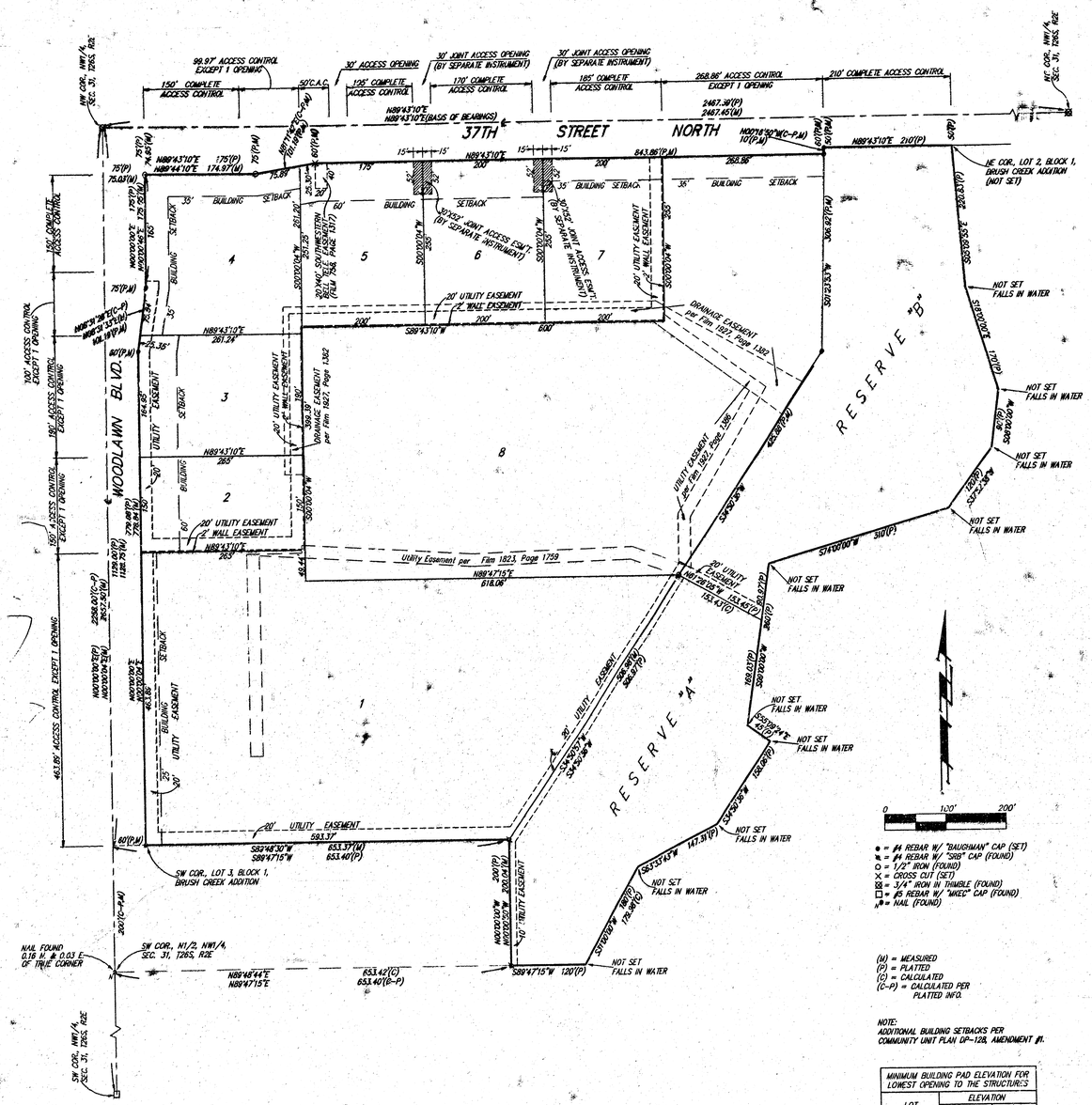

0 120' 200'

- ● = #4 REBAR W/ "BAUGHMAN" CAP (SET)
- ⊙ = #4 REBAR W/ "3818" CAP (FOUND)
- O = 1/2" IRON (FOUND)
- X = CROSS CUT (SET)
- ⊠ = 3/4" IRON IN THIMBLE (FOUND)
- □ = #5 REBAR W/ "WKEC" CAP (FOUND)
- ⌀ = NAIL (FOUND)

(M) = MEASURED
(P) = PLATTED
(C) = CALCULATED
(C-P) = CALCULATED PER PLATTED INFO.

NOTE:
ADDITIONAL BUILDING SETBACKS PER COMMUNITY UNIT PLAN DP-128, AMENDMENT #1.

MINIMUM BUILDING PAD ELEVATION FOR LOWEST OPENING TO THE STRUCTURES		
LOT	ELEVATION	
	CITY DATUM	M.S.L.
1	176	1363.4
8	175.6	1363.0

BENCHMARK:
CITY OF WICHITA BENCHMARK DISC – WOODLAWN AND 37TH ST, NO., SE. FOR. OF INTERSECTION, 75.7' E. & 58.3' S. OF ℄ BOTH.
ELEVATION = 1813.04 (CITY DATUM)

20.00

State of Kansas)
Sedgwick County) SS We, Baughman Company, P.A., Surveyors in aforesaid County and State do hereby certify that we have surveyed and platted "BRUSH CREEK 3RD ADDITION", Wichita, Sedgwick County, Kansas and that the accompanying plat is a true and correct exhibit of the property surveyed, described as follows: A replat of Lots 1, 2, and 3, Block 1, Brush Creek Addition, Wichita, Kansas.

All being situated in the NW1/4 of Sec. 31, Twp. 26-S, R-2-E of the 6th P.M., Sedgwick County, Kansas.

Existing public easements and dedications being vacated by virtue of K.S.A. 12-512(b).

Baughman Co., P.A.

MICHAEL G. CONREY — REGISTERED — 12-07-94 — KANSAS — LAND SURVEYOR

Michael G. Conrey, Surveyor

Know all men by these presents that we, the undersigned, have caused the land in the surveyors certificate to be platted into Lots and Reserves to be known as "BRUSH CREEK 3RD ADDITION", Wichita, Sedgwick County, Kansas. The utility easements are hereby granted as indicated for the construction and maintenance of all public utilities. The wall easements are hereby granted as indicated for the construction and maintenance of a private wall and utility main lines and service lines shall be allowed to cross these easements. Reserves "A" and "B" are hereby reserved for floodway, drainage purposes, lakes, open space, landscaping, sidewalks, and utilities as confined to easements. Reserve "A" shall be owned and maintained by the owner of Lot 1. Reserve "B" shall be owned and maintained by the owner of Lot 8. The floodway shall be the responsibility of the corresponding owners of said Reserves "A" and "B" until such time as the governing body exercising jurisdiction elects to assume the responsibility for maintenance and improvement of the drainage, provided further that no building shall be constructed on or within said floodway, nor shall any fill, change of grade, creation of channel, or any other work be carried on without the permission of the appropriate governing body. All abutters rights of access shall be as indicated on the face of the plat and are hereby granted to the City of Wichita, Kansas. The location of all access openings shall be determined by the City Engineer of the City of Wichita, Kansas. The Minimum Building Pad Elevations for the lowest opening to the structures shall be as indicated on the face of the plat.

Brushcreek Community, Joint Venture

Earl L. Steward III

William L. Korber

W. B. Carter Construction Co., Inc.

Jack K. Stamp, Vice-President

State of Missouri) SS
Stone County) The foregoing instrument acknowledged before me, this 26th day of May, 1998, by Earl A. Steward III, a Joint Venturer of Brushcreek Community, Joint Venture, personally known to me to be the same person who executed the within instrument of writing and such person duly acknowledged the execution of the same.

In testimony whereof, I have hereunto set my hand and affixed my official seal the day and year above written.

DORRIS V. HARRIS
Notary Public – Notary Seal
STATE OF MISSOURI
Stone County
My Commission Expires: Nov. 20, 1998

Dorris V. Harris, Notary Public
DORRIS V. HARRIS

My App't. Exp. 11-20-98

State of Kansas)
Sedgwick County) SS The foregoing instrument acknowledged before me, this 8TH day of JUNE, 1998, by William L. Korber, a Joint Venturer of Brushcreek Community, Joint Venture, personally known to me to be the same person who executed the within instrument of writing and such person duly acknowledged the execution of the same.

In testimony whereof, I have hereunto set my hand and affixed my official seal the day and year above written.

JUDITH M. TERHUNE
Notary Public - State of Kansas
My Appt. Expires 11-7-2001

Judith M. Terhune, Notary Public
JUDITH M. TERHUNE

My App't. Exp. 11-7-2001

This plat of "BRUSH CREEK 3RD ADDITION", Wichita, Sedgwick County, Kansas has been submitted to and approved by the Wichita, Sedgwick County, Metropolitan Area Planning Commission, Wichita, Kansas.

Dated this 16th day of April, 1998.

Wichita-Sedgwick County Metropolitan Area Planning Commission

SEAL — WICHITA-SEDGWICK COUNTY METROPOLITAN AREA — PLANNING COMMISSION — KANSAS

Richard E. Lopez, Chairman
Richard Lopez

Marvin S. Krout, Secretary
Marvin S. Krout

This plat approved and all dedications shown hereon accepted by the City Council of the City of Wichita, Kansas, this 7th day of JULY, 1998.

Bob Knight, Mayor

Pat Burnett, City Clerk
Pat Burnett

Entered on transfer record this 17th day of July, 1998.

James Alford, County Clerk

State of Kansas)
Sedgwick County) SS This is to certify that this plat has been filed for record in the office of the Register of Deeds, this 17th day of July, 1998, at 11:21 o'clock A.M; and is duly recorded.

1708468

Bill Meek, Register of Deeds

Linda Kizzire, Deputy
Linda Kizzire

State of Kansas)
Sedgwick County) SS The foregoing instrument acknowledged before me, this 8TH day of JUNE, 1998, by Jack K. Stamp, Vice-President of W.B. Carter Construction Co., Inc., a Joint Venturer of Brushcreek Community, Joint Venture, personally known to me to be the same person who executed the within instrument of writing and such person duly acknowledged the execution of the same.

In testimony whereof, I have hereunto set my hand and affixed my official seal the day and year above written.

Judith M. Terhune, Notary Public
JUDITH M. TERHUNE

My App't. Exp. 11-7-2001

JUDITH M. TERHUNE
Notary Public - State of Kansas
My Appt. Expires 11-7-2001

BAUGHMAN COMPANY P.A.
ENGINEERING, SURVEYING, & PLANNING
98 03 03 02

1098 662
DR BURNETT-BRUSH CREEK 3RD