SHEET NO.	TOTAL SHEETS
1	6

CITY OF WICHITA, KANSAS
MICHAEL E. LINDEBAK, P.E., CITY ENGINEER

STORM WATER SEWER IMPROVEMENTS

IN

EAST TURNPIKE ENTRANCE 2ND ADDITION
CITY OF WICHITA PRIVATE PROJECT NO. 1050PPS (607861)

INDEX OF SHEETS

1. TITLE & PLAT
2. SITE GRADING
3. SWS LINE NOS. 1 & 2
4. PAVEMENT & RIPRAP DETAILS
5. AREA INLETS & GRADING DETAILS
6. EROSION CONTROL DETAILS

APPROVED AS NOTED
BY CITY ENGINEER OF WICHITA

SANITARY SEWERS _____
STORM SEWERS VRH 10/2/00
DRIVEWAY APPROACHES _____
WATER MAINS _____
PAVING _____

NOTE TO CONTRACTOR

INSPECTION AND TESTING FOR THIS PROJECT IS TO BE PROVIDED BY A LICENSED CONSULTING ENGINEERING FIRM CONTRACTED BY THE CONTRACTOR. SAID INSPECTION TO BE IN ACCORDANCE WITH THE CITY OF WICHITA STANDARD CONSTRUCTION ENGINEERING PRACTICES AND CERTIFIED BY A LICENSED PROFESSIONAL ENGINEER. NO WORK SHALL BE PERFORMED IN DEDICATED EASEMENTS OR PUBLIC RIGHT-OF-WAY BY THE CONTRACTOR UNTIL SUCH INSPECTION IS ARRANGED FOR AND REQUIRED BONDS HAVE BEEN SUBMITTED TO AND APPROVED BY THE CITY NOR SHALL ANY WORK BE COMMENCED IN DEDICATED EASEMENTS OR PUBLIC RIGHT-OF-WAY WITHOUT WRITTEN AUTHORIZATION BY THE CITY ENGINEER. IMPROVEMENTS PERFORMED UNDER THIS PROJECT SHALL NOT BE ACCEPTED BY THE CITY UNTIL ALL APPLICABLE DOCUMENTATION HAS BEEN SUBMITTED TO THE CITY ENGINEER. THIS MAY INCLUDE: AS-BUILT DRAWINGS, INSPECTION LOGS, TEST DOCUMENTATION, TV TAPES, AND A CERTIFICATE OF COMPLETION. THE ABOVE SHALL BE PERFORMED BY THE CONSULTING FIRM CONTRACTED TO INSPECT THIS PROJECT.

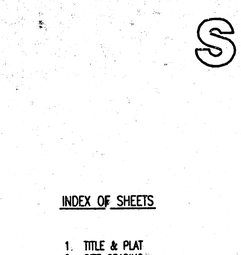

VICINITY MAP

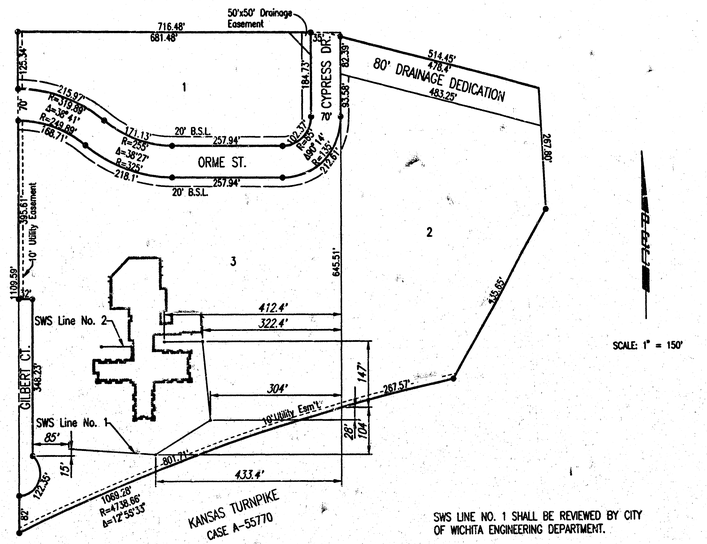

SCALE: 1" = 150'

SWS LINE NO. 1 SHALL BE REVIEWED BY CITY OF WICHITA ENGINEERING DEPARTMENT.

SWS LINE NO. 2 SHALL BE REVIEWED BY CITY OF WICHITA OFFICE OF CENTRAL INSPECTION.

DARWIN R. CROWE LICENSED 14506 KANSAS PROFESSIONAL ENGINEER 9/26/00

RECORD DRAWING
~~JUN 15 2001~~
APR 12, 2001

Booked 9-17-01 MCG D-517

GENERAL NOTES

UNDERGROUND UTILITY SERVICE LINES AND OVERHEAD UTILITY POLE LINES ARE TO BE ADJUSTED AS NECESSARY BY OTHERS PRIOR TO CONSTRUCTION UNLESS THE PLANS SPECIFICALLY CALL FOR THEIR ADJUSTMENT BY THE CONTRACTOR. EXISTING UTILITIES AND THEIR LOCATION, AS SHOWN ON THE PLANS, REPRESENT THE BEST INFORMATION OBTAINABLE FOR DESIGN. LOCATION INFORMATION HAS BEEN OBTAINED FROM THE VARIOUS UTILITY COMPANIES AND IS EITHER FROM COMPANY RECORD DRAWINGS OR COMPANY PROVIDED FIELD LOCATIONS. THE CONTRACTOR WILL BE REQUIRED TO WORK AROUND EXISTING UTILITIES WITHIN THE RIGHT-OF-WAY WHICH DO NOT CONFLICT WITH PROPOSED CONSTRUCTION. CONTRACTOR SHALL SATISFY HIMSELF OF SUBSURFACE CONDITIONS PRIOR TO BIDDING.

TREES AND SHRUBS IN PUBLIC RIGHT-OF-WAY WHICH ARE IN DIRECT CONFLICT WITH PROPOSED NEW CONSTRUCTION SHALL BE REMOVED BY THE CONTRACTOR WITH THE ENGINEER'S APPROVAL. TREES AND SHRUBS WHICH ARE NOT IN DIRECT CONFLICT WITH PROPOSED NEW CONSTRUCTION SHALL BE SAVED AND PROTECTED FROM DAMAGE.

RUBBLE FROM THE REMOVAL OF MISCELLANEOUS STRUCTURES SHALL BE DISPOSED OF ON SITES TO BE PROVIDED BY THE CONTRACTOR AND APPROVED AS NOTED.

ALL DISPOSAL SITES MUST BE APPROVED BY THE KANSAS DEPARTMENT OF HEALTH AND ENVIRONMENT. MATERIAL EITHER STOCKPILED OR DISPOSED OF IN A FLOOD PLAIN WOULD REQUIRE A KANSAS STATE BOARD OF AGRICULTURE PERMIT. ANY MATERIAL DUMPED IN WATERS OF THE UNITED STATES OR WETLANDS IS SUBJECT TO U.S. CORPS OF ENGINEERS PERMITTING REGULATIONS. ANY MATERIAL BURIED OR STOCKPILED BEYOND APPROVED CONSTRUCTION LIMITS WOULD REQUIRE ADDITIONAL ARCHEOLOGICAL INVESTIGATIONS UNLESS BURIED IN A PREVIOUSLY APPROVED BORROW LOCATION.

CONTRACTOR SHALL PROVIDE A MINIMUM FORTY-EIGHT (48) HOUR ADVANCE NOTICE (EXCLUDING WEEKENDS AND HOLIDAYS) PRIOR TO BEGINNING ANY EXCAVATION, TO KANSAS ONE-CALL SYSTEM, A UTILITY LOCATION SERVICE, AT (316) 687-2470 TO REQUEST THE FOLLOWING UTILITY COMPANIES TO LOCATE ALL EXISTING LINES WITHIN THE PROJECT AREA: K.G.S. GAS, PEOPLES NATURAL GAS, K.G.E. ELECTRIC, SOUTHWESTERN BELL TELEPHONE, COX COMMUNICATIONS, CITY OF WICHITA SEWER MAINTENANCE AND CITY OF WICHITA WATER DEPARTMENT.

THE CONTRACTOR SHALL BE RESPONSIBLE FOR PRESERVING PROPERTY IRONS. THE CONTRACTOR WILL BE REQUIRED TO RE-ESTABLISH ANY PROPERTY IRONS WHICH ARE DAMAGED OR DESTROYED BY HIS CONSTRUCTION OPERATIONS. SUCH IRONS SHALL BE RE-ESTABLISHED BY A LICENSED LAND SURVEYOR IN ACCORDANCE WITH STATE LAWS.

THE WATER DEPARTMENT SHALL FIELD LOCATE WATER VALVES ONE TIME DURING CONSTRUCTION WHEN REQUESTED BY THE CONTRACTOR. IT SHALL BE THE CONTRACTOR'S RESPONSIBILITY TO PRESERVE SUCH FIELD LOCATIONS DURING THE CONSTRUCTION PROCESS. WATER VALVES, WATER VALVE BOXES OR FIRE HYDRANTS DAMAGED DURING CONSTRUCTION SHALL BE REPAIRED BY THE CONTRACTOR AT HIS OWN EXPENSE.

ALL AREAS DISTURBED DURING CONSTRUCTION SHALL BE SEEDED, FERTILIZED, AND MULCHED ACCORDING TO CITY OF WICHITA STANDARDS AND SPECIFICATIONS.

A SPRINKLER SYSTEM IS PRESENT IN THE PROJECT AREA. REMOVE AND REPLACE AS NECESSARY TO FACILITATE CONSTRUCTION.

CONTRACTOR TO COORDINATE THE REMOVAL AND REPLACEMENT OF THE EXISTING FIRE LANE ON THE EAST SIDE OF THE PROJECT AREA WITH OWNER.

SEPTEMBER 2000

PLANS PREPARED BY
PROFESSIONAL ENGINEERING CONSULTANTS, P.A.
ENGINEERS
WICHITA, KANSAS

16-03-04-17

DSNR: KER OPER: SAD SCALE: 1=150.00
Q:\2000\00478\TITLE 09-25-2000 11:15:14 am

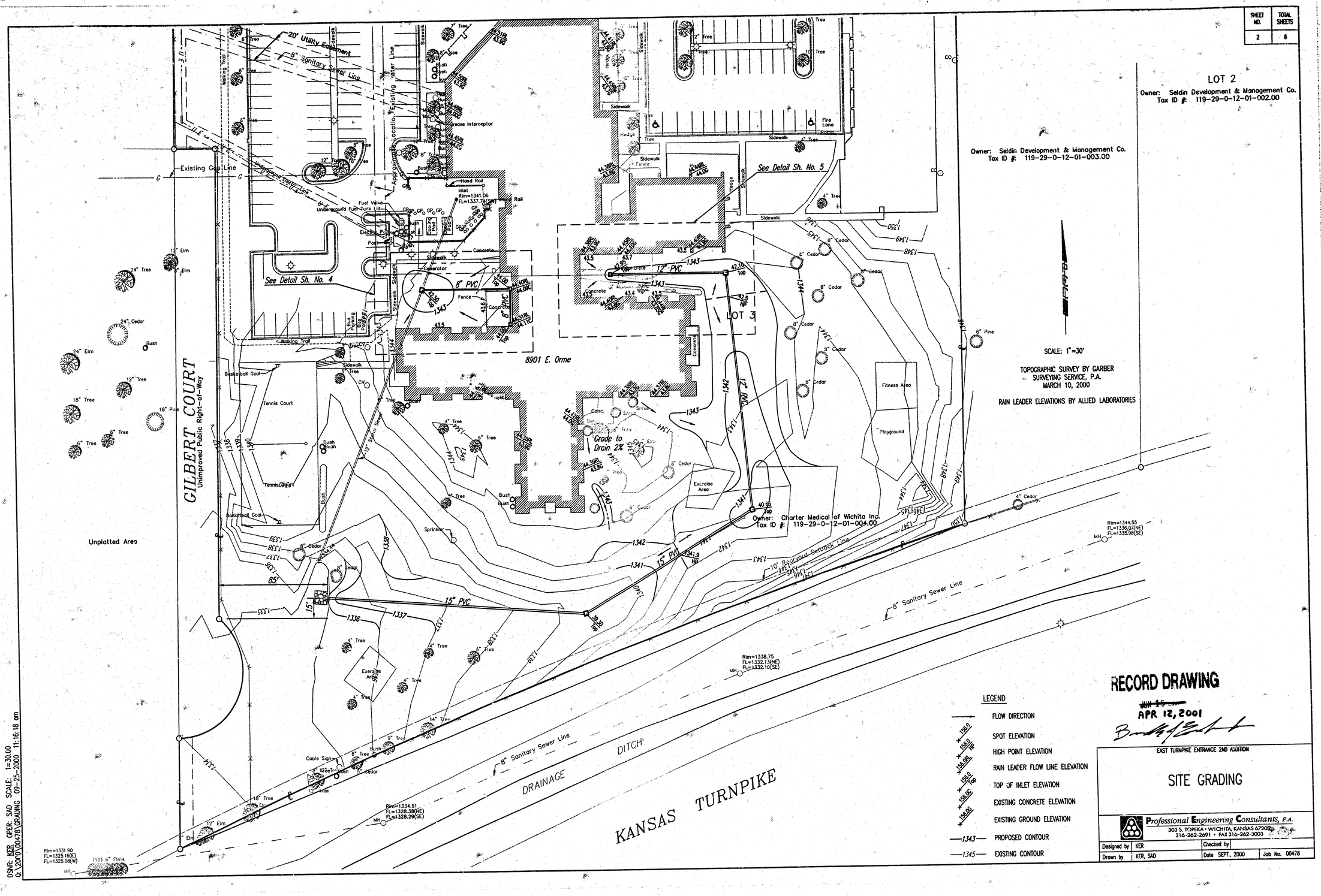

SHEET NO. 2
TOTAL SHEETS 6
LOT 2
Owner: Seldin Development & Management Co.
Tax ID #: 119-29-0-12-01-002.00
Owner: Seldin Development & Management Co.
Tax ID #: 119-29-0-12-01-003.00
SCALE: 1"=30'
TOPOGRAPHIC SURVEY BY GARBER SURVEYING SERVICE, P.A.
MARCH 10, 2000
RAIN LEADER ELEVATIONS BY ALLIED LABORATORIES
Owner: Charter Medical of Wichita Inc.
Tax ID #: 119-29-0-12-01-004.00
20' Utility Easement
8" Sanitary Sewer Line
Existing Gas Line
See Detail Sh. No. 4
See Detail Sh. No. 5
8901 E. Orme
LOT 3
GILBERT COURT
Unimproved Public Right-of-Way
Unplatted Area
Grade to Drain 2%
Fitness Area
Playground
Exercise Area
Tennis Court
Basketball Goal
Sprinkler
10' Rearyard Setback Line
8" Sanitary Sewer Line
DRAINAGE DITCH
KANSAS TURNPIKE
Rim=1344.55
FL=1336.07(NE)
FL=1335.98(SE)
Rim=1338.75
FL=1332.13(NE)
FL=1332.10(SE)
Rim=1334.91
FL=1328.38(NE)
FL=1328.29(SE)
Rim=1331.90
FL=1325.16(E)
FL=1325.08(W)
LEGEND
FLOW DIRECTION
SPOT ELEVATION
HIGH POINT ELEVATION
RAIN LEADER FLOW LINE ELEVATION
TOP OF INLET ELEVATION
EXISTING CONCRETE ELEVATION
EXISTING GROUND ELEVATION
PROPOSED CONTOUR
EXISTING CONTOUR
RECORD DRAWING
APR 12, 2001
EAST TURNPIKE ENTRANCE 2ND ADDITION
SITE GRADING
Professional Engineering Consultants, P.A.
303 S. TOPEKA • WICHITA, KANSAS 67202
316-262-2691 • FAX 316-262-3003
Designed by KER
Checked by
Drawn by KER, SAD
Date SEPT., 2000
Job No. 00478
DSNR: KER OPER: SAD SCALE: 1=30.00
Q:\2000\00478\GRADING 09-25-2000 11:16:18 am

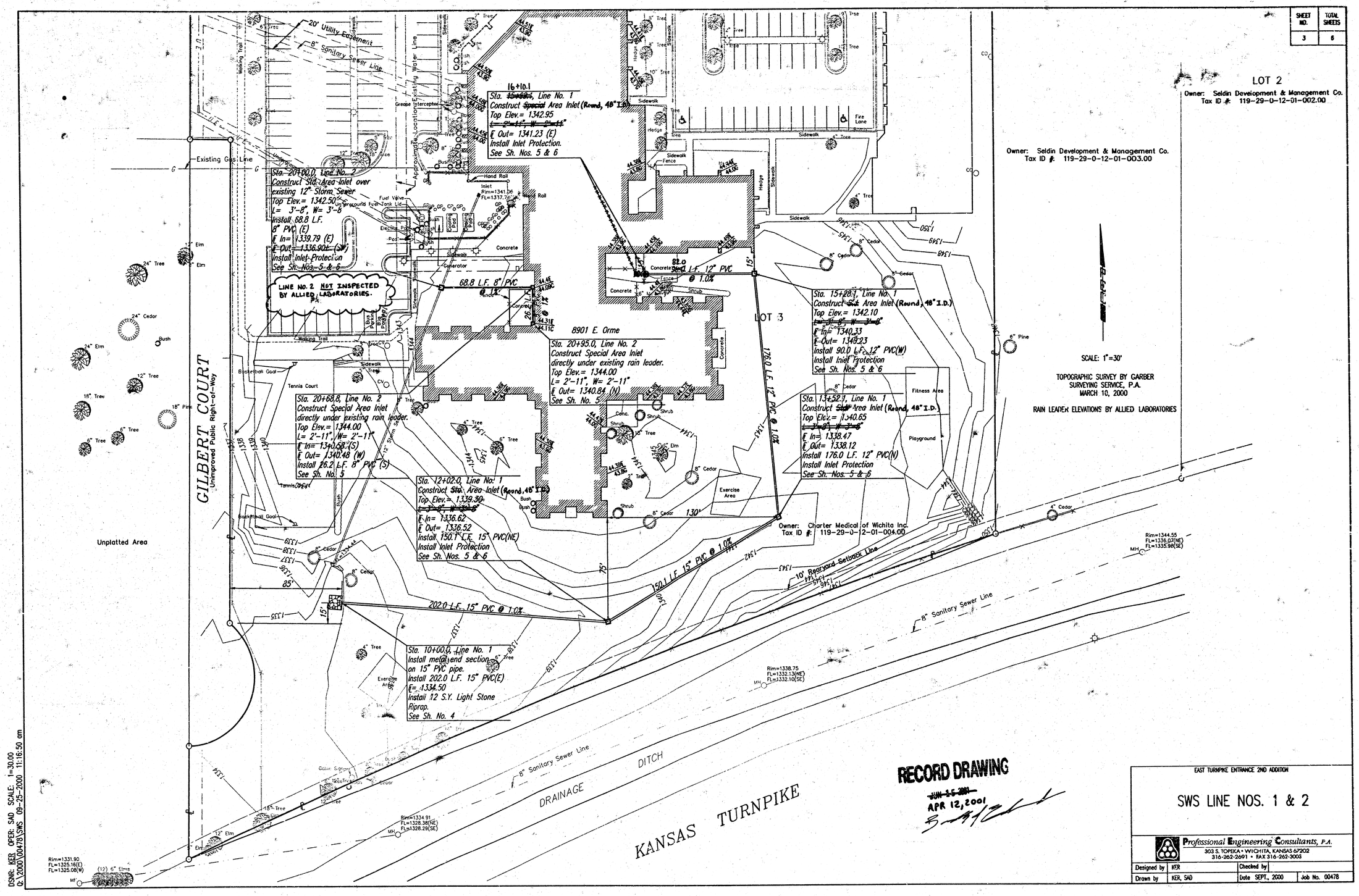

SHEET NO. 3
TOTAL SHEETS 6
LOT 2
Owner: Seldin Development & Management Co.
Tax ID #: 119-29-0-12-01-002.00
Owner: Seldin Development & Management Co.
Tax ID #: 119-29-0-12-01-003.00
SCALE: 1"=30'
TOPOGRAPHIC SURVEY BY GARBER SURVEYING SERVICE, P.A. MARCH 10, 2000
RAIN LEADER ELEVATIONS BY ALLIED LABORATORIES
16+10.1
Sta. ~~15+68.1~~, Line No. 1
Construct ~~Special~~ Area Inlet (Round, 48" I.D.)
Top Elev.= 1342.95
~~L= 2'-11", W= 2'-11"~~
℄ Out= 1341.23 (E)
Install Inlet Protection.
See Sh. Nos. 5 & 6
Sta. 20+00.0, Line No. 2
Construct Std. Area Inlet over existing 12" Storm Sewer
Top Elev.= 1342.50
L= 3'-8", W= 3'-8
Install 68.8 L.F. 8" PVC (E)
℄ In= 1339.79 (E)
℄ Out= 1336.90 (SW)
Install Inlet Protection
See Sh. Nos. 5 & 6
LINE NO. 2 NOT INSPECTED BY ALLIED LABORATORIES.
68.8 L.F. 8" PVC @ 1%
82.0 L.F. 12" PVC @ 1.0%
8901 E. Orme
Sta. 20+95.0, Line No. 2
Construct Special Area Inlet directly under existing rain leader.
Top Elev.= 1344.00
L= 2'-11", W= 2'-11"
℄ Out= 1340.84 (N)
See Sh. No. 5
Sta. 20+68.8, Line No. 2
Construct Special Area Inlet directly under existing rain leader.
Top Elev.= 1344.00
L= 2'-11", W= 2'-11"
℄ In= 1340.58 (S)
℄ Out= 1340.48 (W)
Install 26.2 L.F. 8" PVC (S)
See Sh. No. 5
Sta. 12+02.0, Line No. 1
Construct ~~Std.~~ Area Inlet (Round, 48" I.D.)
Top Elev.= 1339.30
~~L= 3'-8", W= 3'-8"~~
℄ In= 1336.62
℄ Out= 1336.52
Install 150.1 L.F. 15" PVC(NE)
Install Inlet Protection
See Sh. Nos. 5 & 6
Sta. 15+28.1, Line No. 1
Construct ~~Std.~~ Area Inlet (Round, 48" I.D.)
Top Elev.= 1342.10
~~L= 3'-8", W= 3'-8"~~
℄ In= 1340.33
℄ Out= 1340.23
Install 90.0 L.F. 12" PVC(W)
Install Inlet Protection
See Sh. Nos. 5 & 6
Sta. 13+52.1, Line No. 1
Construct ~~Std.~~ Area Inlet (Round, 48" I.D.)
Top Elev.= 1340.65
~~L= 3'-8", W= 3'-8"~~
℄ In= 1338.47
℄ Out= 1338.12
Install 176.0 L.F. 12" PVC(N)
Install Inlet Protection
See Sh. Nos. 5 & 6
176.0 L.F. 12" PVC @ 1.0%
150.1 L.F. 15" PVC @ 1.0%
202.0 L.F. 15" PVC @ 1.0%
Sta. 10+00.0, Line No. 1
Install metal end section on 15" PVC pipe.
Install 202.0 L.F. 15" PVC(E)
℄= 1334.50
Install 12 S.Y. Light Stone Riprap.
See Sh. No. 4
GILBERT COURT
Unimproved Public Right-of-Way
Unplatted Area
Existing Gas Line
20' Utility Easement
8" Sanitary Sewer Line
Approximate Location Existing Water Line
LOT 3
Owner: Charter Medical of Wichita Inc.
Tax ID #: 119-29-0-12-01-004.00
10' Rearyard Setback Line
8" Sanitary Sewer Line
DRAINAGE DITCH
KANSAS TURNPIKE
Rim=1344.55 FL=1336.07(NE) FL=1335.98(SE)
Rim=1338.75 FL=1332.13(NE) FL=1332.10(SE)
Rim=1334.91 FL=1328.38(NE) FL=1328.29(SE)
Rim=1331.90 FL=1325.16(E) FL=1325.08(W)
RECORD DRAWING
~~JUN 25 2001~~
APR 12, 2001
EAST TURNPIKE ENTRANCE 2ND ADDITION
SWS LINE NOS. 1 & 2
Professional Engineering Consultants, P.A.
303 S. TOPEKA • WICHITA, KANSAS 67202
316-262-2691 • FAX 316-262-3003
Designed by KER
Checked by
Drawn by KER, SAD
Date SEPT., 2000
Job No. 00478
DSNR: KER OPER: SAD SCALE: 1=30.00
Q:\2000\00478\SWS 09-25-2000 11:16:50 am

SHEET NO.	TOTAL SHEETS
4	6

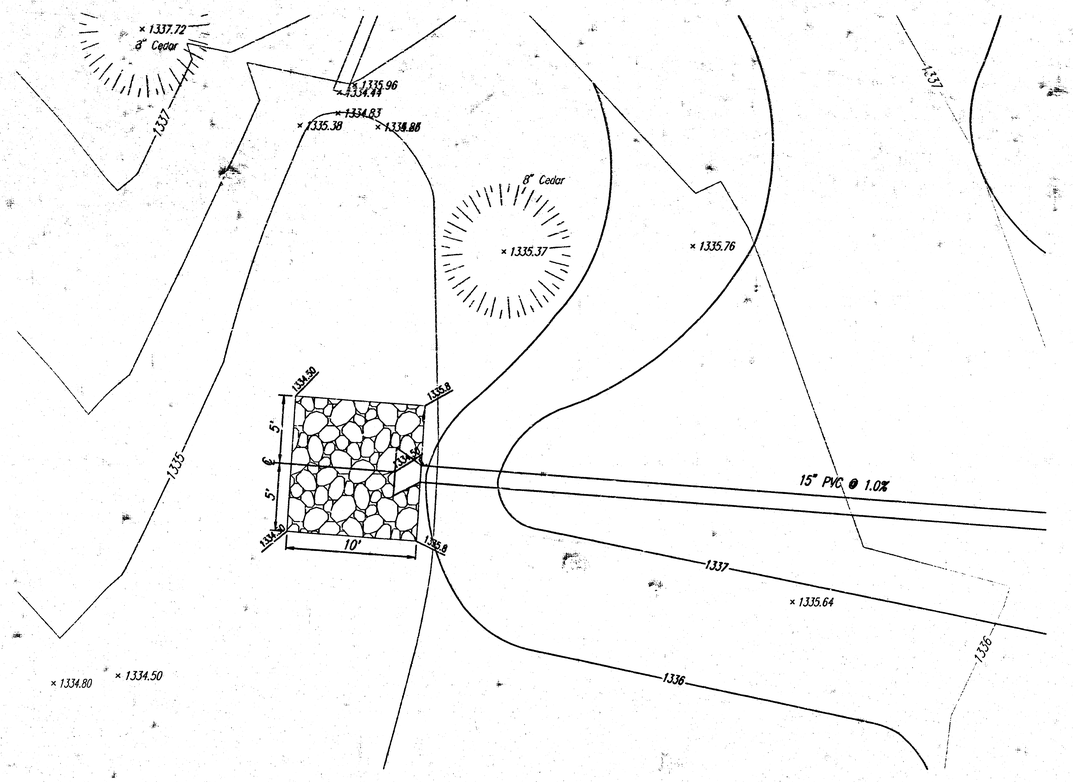

SCALE: 1"=5'

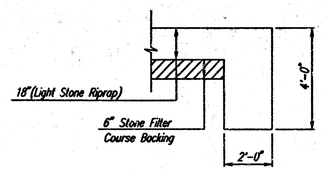

TYPICAL SECTION THRU TOEWALL

NO SCALE

NOTES

1. ALL RIPRAP FOR THIS PROJECT SHALL BE NATURAL STONE. NEITHER BROKEN CONCRETE, FABRIC ENVELOPE, NOR PREMIXED DRY PACKAGED CONCRETE BAG ALTERNATES WILL BE ALLOWED.
2. TOEWALLS SHALL BE INSTALLED ALONG ALL EDGES OF STONE RIPRAP.
3. GROUTING OF THE SURFACE OF THE RIPRAP SHALL NOT BE PERFORMED. GROUTING OF THE TOEWALLS SHALL BE PERFORMED PER CITY SPECIFICATIONS.

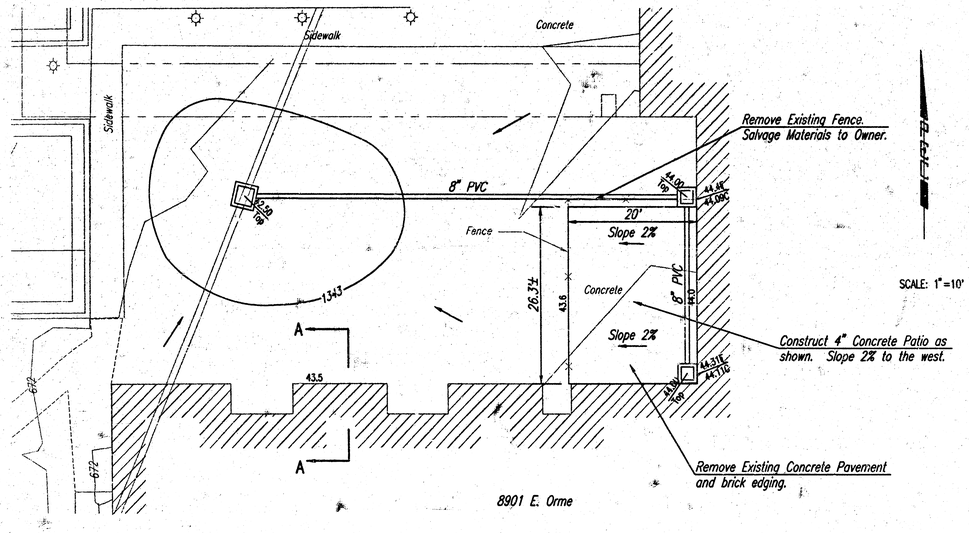

SCALE: 1"=10'

SEE SH. NO. 5 FOR SECTION A-A

SIDEWALK SHALL BE JOINTED TO FORM MAXIMUM 5' SQUARE PANELS.

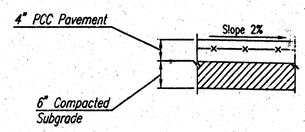

SECTION

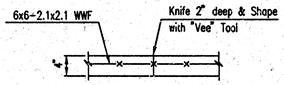

CONTRACTION JOINT (CJ)

Note: No sawn contraction joints will be allowed

SIDEWALK DETAILS

RECORD DRAWING

~~JUN 15 2001~~

APR 12, 2001

EAST TURNPIKE ENTRANCE 2ND ADDITION

PAVEMENT & RIPRAP DETAILS

Professional Engineering Consultants, P.A.
303 S. TOPEKA • WICHITA, KANSAS 67202
316-262-2691 • FAX 316-262-3003

Designed by	KER	Checked by	
Drawn by	KER, SAD	Date SEPT 2000	Job No. 00478

DSNR: KER OPER: SAD SCALE: 1=5.00
Q:\2000\00478\RIPRAP 09-25-2000 11:17:13 am

SHEET NO.	TOTAL SHEETS
5	6

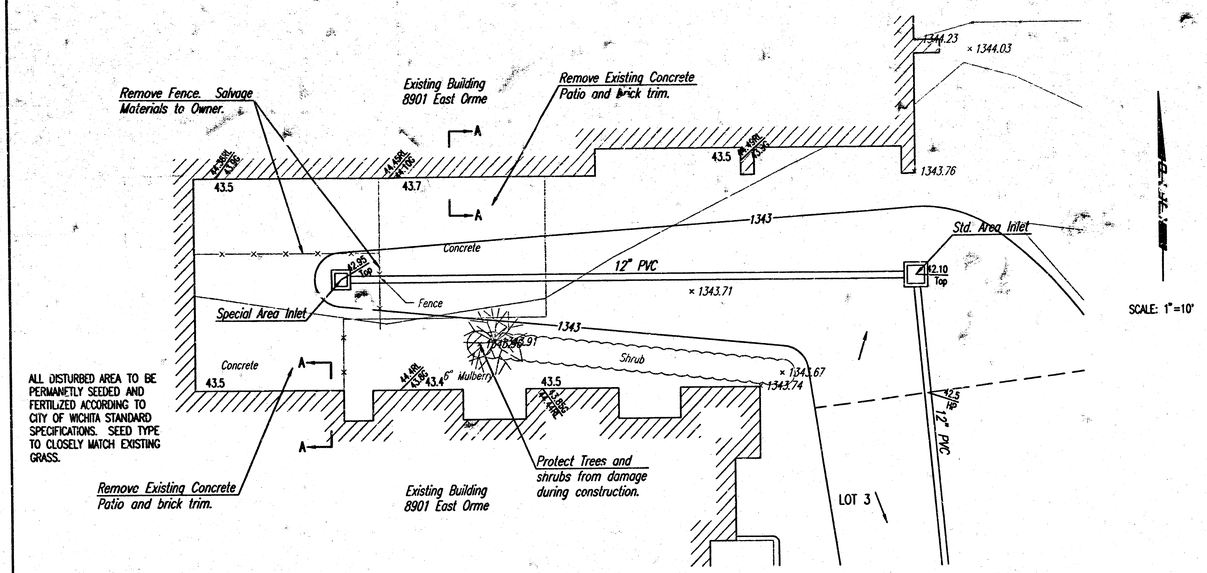

SCALE: 1"=10'

NOTE:
Contractor shall excavate existing ground to a minimum of 6" below the stucco finish. Contractor shall be required to overexcavate a minimum of 6" and provide 6" of topsoil in all turf area

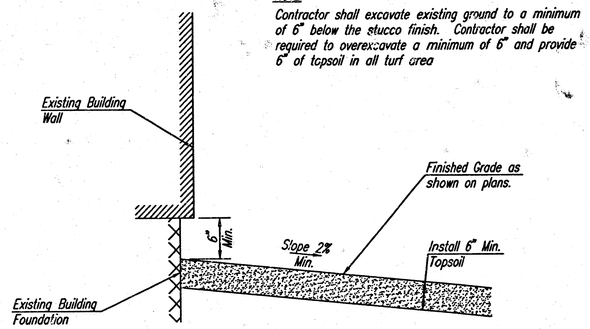

SECTION A-A

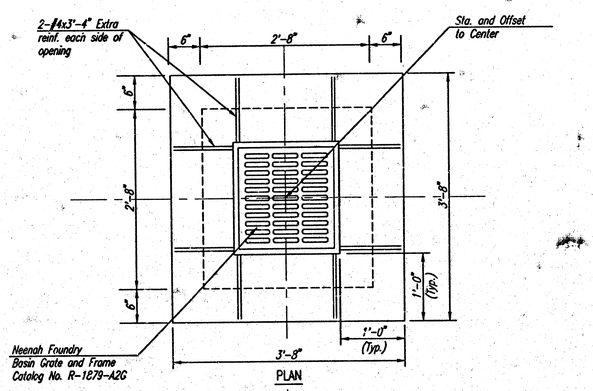

PLAN

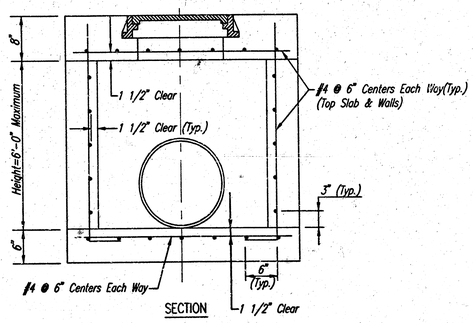

SECTION

AREA INLET DETAIL

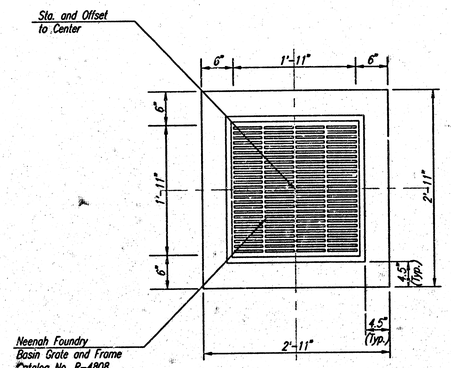

PLAN

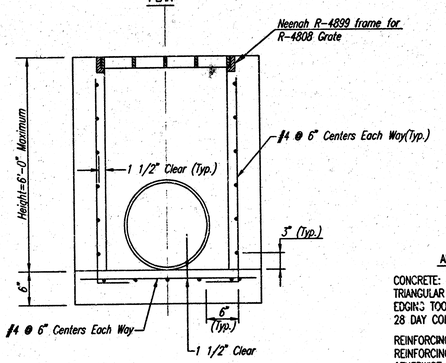

SECTION

SPECIAL AREA INLET DETAIL

AREA INLET GENERAL NOTES

CONCRETE: BEVEL ALL EXPOSED EDGES WITH A 3/4" TRIANGULAR MOLDING OR FINISH WITH AN APPROVED EDGING TOOL. CONCRETE SHALL HAVE A MINIMUM 28 DAY COMPRESSIVE STRENGTH OF 4000 PSI.

REINFORCING STEEL: ALL DIMENSIONS RELATIVE TO REINFORCING STEEL ARE TO CENTERLINE OF BAR UNLESS OTHERWISE NOTED. ALL REINFORCING STEEL SHALL CONFORM TO A.S.T.M. DESIGNATION A615 GRADE 60.

RECORD DRAWING
~~JUN 1 2001~~
APR 12, 2001

EAST TURNPIKE ENTRANCE 2ND ADDITION

AREA INLETS & GRADING DETAILS

Professional Engineering Consultants, P.A.
303 S. TOPEKA • WICHITA, KANSAS 67202
316-262-2691 • FAX 316-262-3003

Designed by	KER	Checked by	
Drawn by	KER, SAD	Date SEPTEMBER, 2000	Job No. 00478

DSNR: KER OPER: SAD SCALE: 1=10.00
Q:\2000\00478\detail 09-25-2000 11:17:39 am

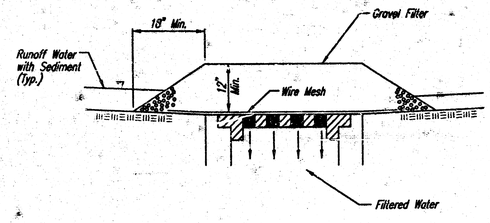

AREA INLET PROTECTION
GRAVEL AND WIRE MESH

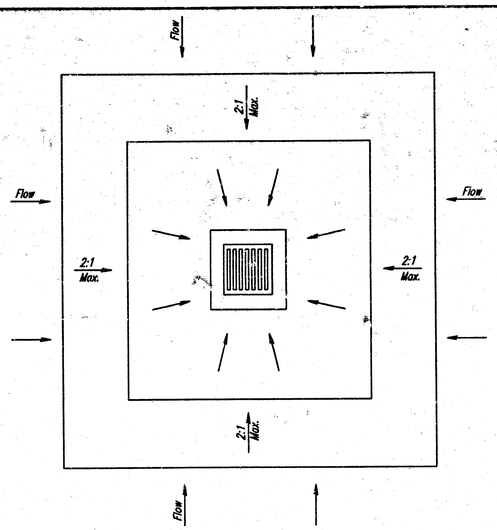

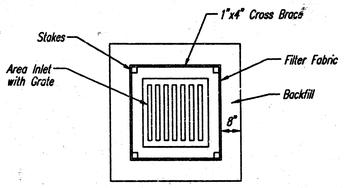

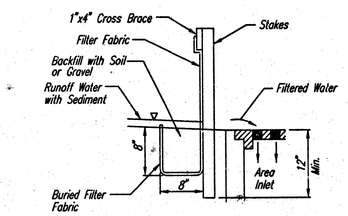

AREA INLET PROTECTION
FILTER FABRIC

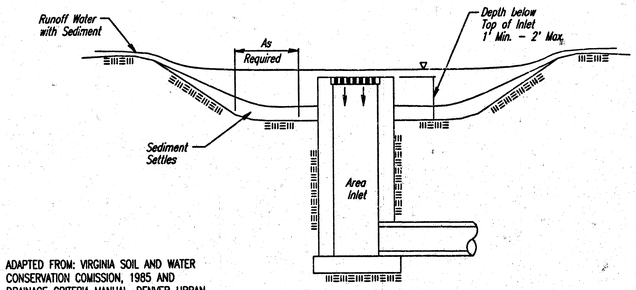

ADAPTED FROM: VIRGINIA SOIL AND WATER CONSERVATION COMISSION, 1985 AND DRAINAGE CRITERIA MANUAL, DENVER URBAN DRAINAGE AND FLOOD CONTROL DISTRICT 9-1-92

NOTE: INLET SIZE MAY VARY FROM THAT SHOWN.

AREA INLET PROTECTION
EXCAVATED AREA INLET SEDIMENT TRAP

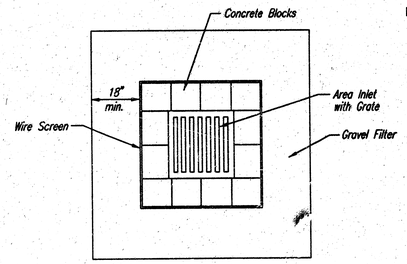

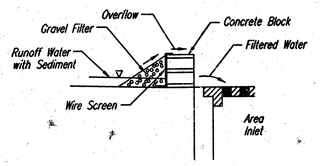

AREA INLET PROTECTION
BLOCK AND GRAVEL FILTER

GENERAL NOTES
INLET PROTECTION

1. INLET PROTECTION METHOD MAY BE ANY OF THE APPLICABLE TYPES SHOWN, AT THE CONTRACTORS OPTION.
2. GRAVEL FILTER SHALL BE A DURABLE, WELL-GRADED SAND-GRAVEL OR CRUSHED STONE, MAXIMUM 1-1/2 IN. SIZE. AS AN ALTERNATE GRAVEL FILLED BAGS OF BURLAP OR OTHER FABRIC MAY BE USED. WHERE BAGS ARE USED, THE WIRE SCREEN, WHERE SHOWN, MAY BE OMITTED.
3. FILTER FABRIC, WHERE USED, SHALL BE RESISTANT TO ULTRAVIOLET LIGHT. MATERIALS MAY BE SUPPLIED BY THE FOLLOWING MANUFACTURERS;

MIRAFI, INC.	-	100X
HOECHST FIBERS INDUSTRIES	-	TREVIRA 1115
EXXON	-	TYPAR 3301 W

MATERIALS SUPPLIED BY THE ABOVE NAMED MANUFACTURERS SHALL BE ACCEPTED UPON VISUAL INSPECTION BY THE ENGINEER. OTHER COMPARABLE MATERIALS MAY BE USED IF APPROVED BY THE ENGINEER.

4. INLET PROTECTION SHALL BE ERECTED AS SOON AS THE STRUCTURE HAS BEEN BACKFILLED. MEASURES SHALL BE TAKEN TO PRECLUDE ENTRY OF SEDIMENT INTO THE STORM WATER SEWER SYSTEM DURING CONSTRUCTION OF THE STRUCTURE.
5. REMOVAL AND DISPOSAL OF ACCUMULATED SILT AND DEBRIS AND/OR REMOVAL AND RECONSTRUCTION OF INLET PROTECTION INSTALLATIONS SHALL BE PERFORMED THROUGHOUT THE PROJECT LIFE WHENEVER DEBRIS REACHES ONE-THIRD THE BARRIER HEIGHT, OR AS DEEMED NECESSARY BY THE ENGINEER. ULTIMATE REMOVAL AND DISPOSAL OF INLET PROTECTION AND DEBRIS WILL BE PERFORMED BY THE OWNER.

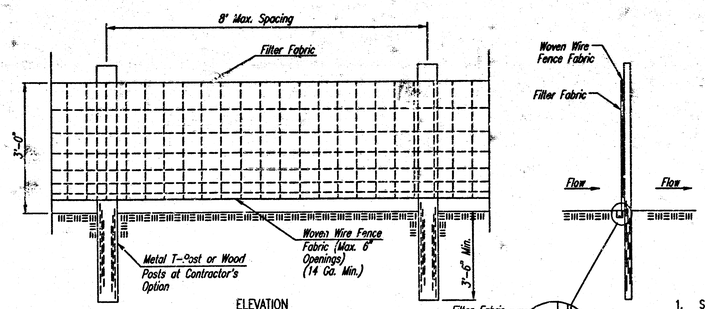

ELEVATION

SEDIMENT BARRIER DETAILS
FENCE OPTION

ANCHOR TRENCH DETAIL

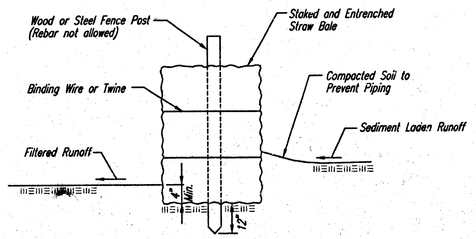

LINEAR SEDIMENT BARRIER

GENERAL NOTES
LINEAR SEDIMENT BARRIER

1. SEDIMENT BARRIERS SHALL BE INSTALLED AT LOCATIONS SHOWN ON THE PLANS OR AS DIRECTED BY THE ENGINEER. ADDITIONAL SEDIMENT BARRIERS WILL BE INSTALLED AT LOCATIONS AS DIRECTED BY THE ENGINEER WITH NO ADJUSTMENT IN UNIT PRICE.
2. SEDIMENT BARRIERS SHALL BE ERECTED PRIOR TO THE COMMENCEMENT OF EARTHWORK OPERATIONS IN A GIVEN BASIN. REMOVAL AND DISPOSAL OF ACCUMULATED SILT AND DEBRIS AND/OR REMOVAL AND RECONSTRUCTION OF SEDIMENT BARRIERS WILL BE PERFORMED THROUGHOUT THE PROJECT LIFE WHEN DEBRIS REACHES ONE-THIRD THE FENCE HEIGHT OR AS DEEMED NECESSARY BY THE ENGINEER. SEDIMENT BARRIERS AND ACCUMULATED DEBRIS SHALL BE REMOVED AND DISPOSED OF BY THE OWNER AFTER TURF COVER HAS BEEN ESTABLISHED, UNLESS OTHER ARRANGEMENTS HAVE BEEN AGREED TO.
3. FILTER FABRIC FOR FENCE OPTION SEDIMENT BARRIERS SHALL BE RESISTANT TO ULTRAVIOLET LIGHT. MATERIALS MAY BE SUPPLIED BY THE FOLLOWING MANUFACTURERS:

MIRAFI, INC.	-	100X
HOECHST FIBERS INDUSTRIES	-	TREVIRA 1115
EXXON	-	TYPAR 3301 W

MATERIALS SUPPLIED BY THE ABOVE NAMED MANUFACTURERS SHALL BE ACCEPTED UPON VISUAL INSPECTION BY THE ENGINEER. OTHER COMPARABLE MATERIALS MAY BE USED IF APPROVED BY THE ENGINEER.

FILTER FABRIC SHALL BE ATTACHED TO FENCE FABRIC BY MEANS OF TIE WIRES OR HOG RINGS PRIOR TO ATTACHMENT OF FENCE/FABRIC COMBINATION ONTO THE POSTS.

4. BALES USED FOR SEDIMENT BARRIERS MAY BE EITHER HAY OR STRAW, PROVIDED THEY ARE SOUND AND INTACT.
5. TEMPORARY EROSION CONTROL BERMS AND/OR INTERCEPT DITCHES SHALL BE CONSTRUCTED AT LOCATIONS SHOWN ON THE PLANS OR AS DIRECTED BY THE ENGINEER.

WHERE TEMPORARY EROSION CONTROL BERMS AND/OR INTERCEPT DITCHES ARE USED, ALL AREAS WHERE FLOW IS CONCENTRATED SHALL BE PROTECTED BY SILTATION BARRIERS PRIOR TO DISCHARGING INTO ANY DITCH, STORM SEWER, OR WATERCOURSE.

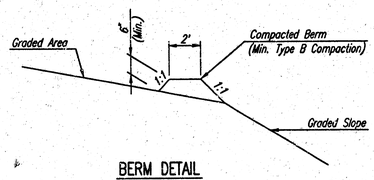

BERM DETAIL

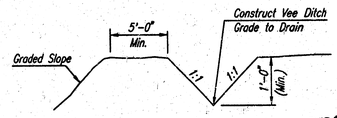

INTERCEPT DITCH DETAIL

TEMPORARY EROSION CONTROL DETAILS FOR SLOPE PROTECTION

The Engineer may determine that the height of Berm or depth of Ditch should be increased over that shown if Drainage conditions are producing Slope Erosion.

SHEET NO.	TOTAL SHEETS
8	8

RECORD DRAWING
~~JUN 6 2001~~
APR 12, 2001

EAST TURNPIKE ENTRANCE 2ND ADDITION

EROSION CONTROL DETAILS

Professional Engineering Consultants, P.A.
303 S. TOPEKA • WICHITA, KANSAS 67202
316-262-2691 • FAX 316-262-3003

Designed by	BER	Checked by	
Drawn by	DEP	Date SEPT 2000	Job No. 00473

DSNR: KER OPER: SAD SCALE: 1=1.00
Q:\2000\00478\ERSDTL 05-25-2000 11:17:53 am

17 AO 03 0d