STORM WATER SEWER FOR HI-TECH INDUSTRIAL PARK SECOND

PRIVATE PROJECT NO. 448-76-245-80001-000-000-131

CITY OF WICHITA, KANSAS

MICHAEL E. LINDEBAK, CITY ENGINEER

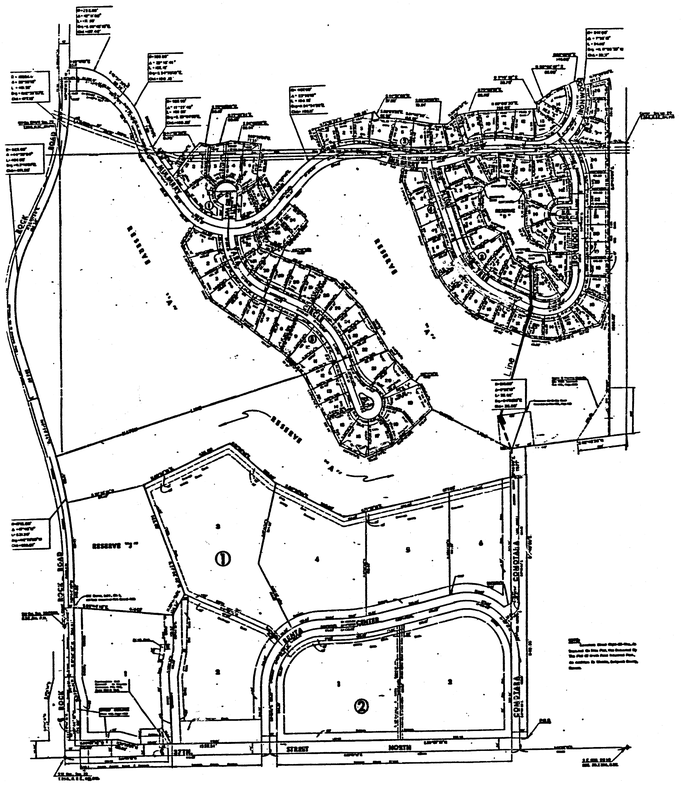

N

Scale: 1"=300'

GENERAL NOTES

1. THE CONTRACTOR SHALL BE RESPONSIBLE FOR PRESERVING PROPERTY IRONS. THE CONTRACTOR SHALL BE REQUIRED TO RE-ESTABLISH ANY PROPERTY IRONS WHICH ARE DAMAGED OR DESTROYED BY HIS CONSTRUCTION OPERATIONS. SUCH IRONS SHALL BE RE-ESTABLISHED BY A LICENSED LAND SURVEYOR OR A LICENSED PROFESSIONAL ENGINEER IN ACCORDANCE WITH STATE LAWS.

2. TREES TO BE REMOVED ARE MARKED ⊗. ALL TREES WHICH IN THE OPINION OF THE FIELD ENGINEER CAN BE SAVED, SHALL BE SAVED.

3. CONTRACTOR SHALL NOTIFY THE FOLLOWING COMPANIES PRIOR TO ANY EXCAVATION:

ARKLA GAS COMPANY	942-8350
BELL TELEPHONE COMPANY	268-2256
CABLEVISION	269-3340
KP&L COMPANY	263-7511
KANSAS GAS & ELECTRIC	261-6248
KANSAS ONE-CALL	1-800-344-7233

4. EXISTING UTILITIES AND THEIR LOCATIONS, AS SHOWN ON THE PLANS, REPRESENT THE BEST INFORMATION OBTAINABLE FOR DESIGN. LOCATION INFORMATION HAS BEEN OBTAINED FROM THE VARIOUS UTILITY COMPANIES AND IS EITHER FROM COMPANY RECORD DRAWINGS OR COMPANY PROVIDED FIELD LOCATIONS. THE PLAN LOCATIONS SHOWN ARE NOT GUARANTEED. ADDITIONAL EXISTING UTILITIES MAY ALSO BE ENCOUNTERED.

5. EXCAVATION SHALL REMAIN ON SITE. CONTRACTOR SHALL NOTIFY THE OWNER 24 HOURS PRIOR TO CONSTRUCTION TO OBTAIN THE LOCATION TO PLACE EXCESS MATERIAL. SPREADING OF THE EXCESS MATERIAL SHALL BE SUBSIDIARY TO THIS PROJECT.

BENCH MARKS

B.M. #1 * * CUT ON NW CORNER RCB ± 900' S OF CENTER SECTION 29-26-2E.
ELEV. = 211.80

B.M. #2 CITY STANDARD 44' S & 48' W OF CENTERLINE OF 37TH & ROCK ROAD.
ELEV. = 204.11

B.M. #3 CITY STANDARD 32' S & 11' E OF S QUARTER CORNER SECTION 29-26-2E.
ELEV. = 224.64

B.M. #4 TBM RR-SPK IN S FACE OF CORNER FENCE POST ± 50' E OF W QUARTER CORNER SECTION 29-26-2E.
ELEV. = 189.79

INDEX TO DRAWINGS

SHEET NO.	DESCRIPTION
1	TITLE SHEET
2	PLAN LINE I
3	PLAN LINE I & DETAILS
4	REINFORCED CONCRETE MANHOLES DETAILS
5	S.W.S. DETAILS

NOTE TO CONTRACTOR

This project will be constructed under the supervision of the CITY ENGINEER and conforming to the SPECIFICATIONS of the CITY OF WICHITA. The CONTRACTOR will pay the City of Wichita for all costs of plan review, inspection and booking per contract.

APPROVED AS NOTED
By CITY ENGINEER OF WICHITA

Sanitary Sewers _____
Storm Sewers URH 6/17/86
Driveway Approaches _____
Water Mains _____
_____

FRANK BERTON NELSON LICENSED 9130 KANSAS PROFESSIONAL ENGINEER

HI-TECH INDUSTRIAL PARK SECOND ADD. STORM WATER SEWER PLANS

F.B.N.
F.F.
K.H.B.
JUNE 1986

MID KANSAS ENGINEERING CONSULTANTS PA
682-6561

Sheet 1 of 5

1/5

FILMED FROM THE BEST AVAILABLE COPY

HI-TECH INDUSTRIAL PARK SECOND
STORM WATER SEWER
PROJ-NO-448-76-245-8000I-000-000-001

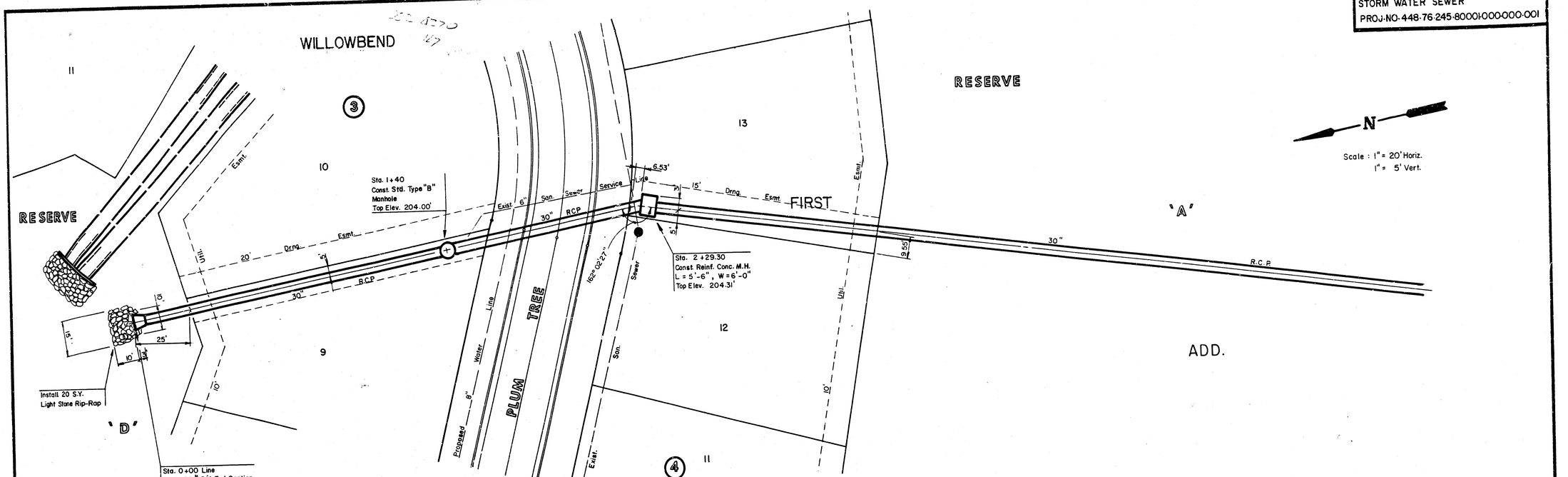

PLAN LINE - 1

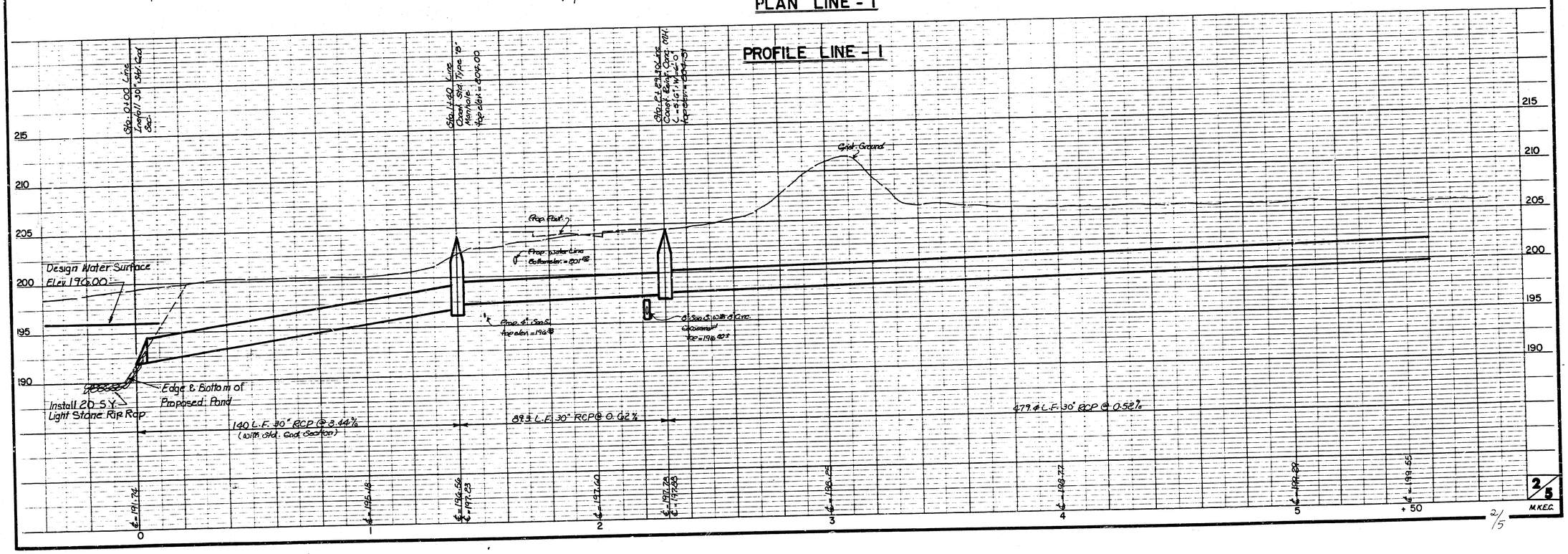

2/5
M.K.E.C.

2/5

FILMED FROM THE BEST AVAILABLE COPY

HI-TECH INDUSTRIAL PARK SECOND
STORM WATER SEWER
PROJ-NO-448-76-245-80001-000-000-001

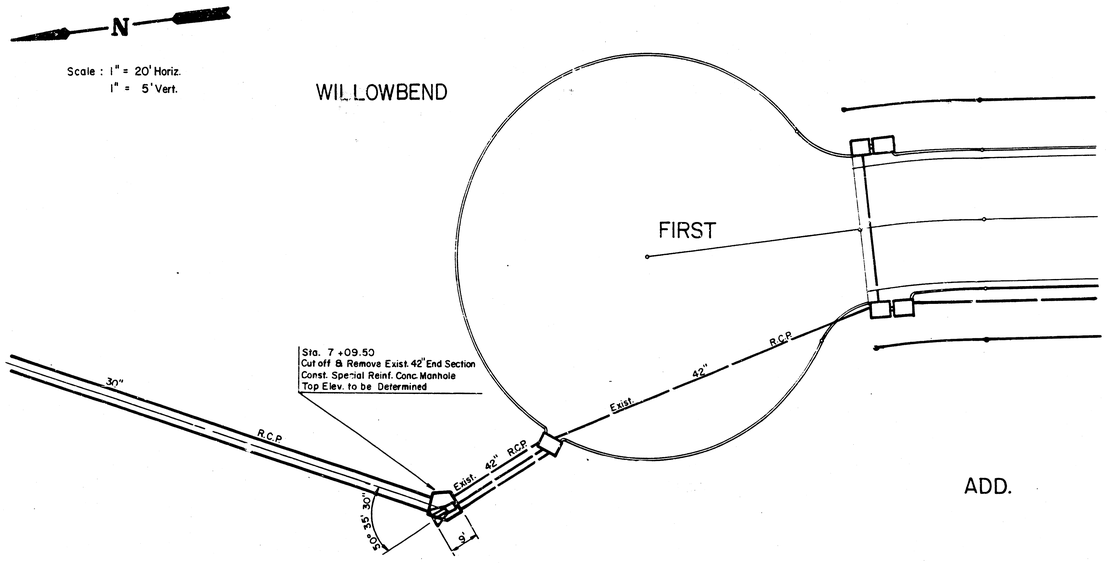

PLAN LINE - 1

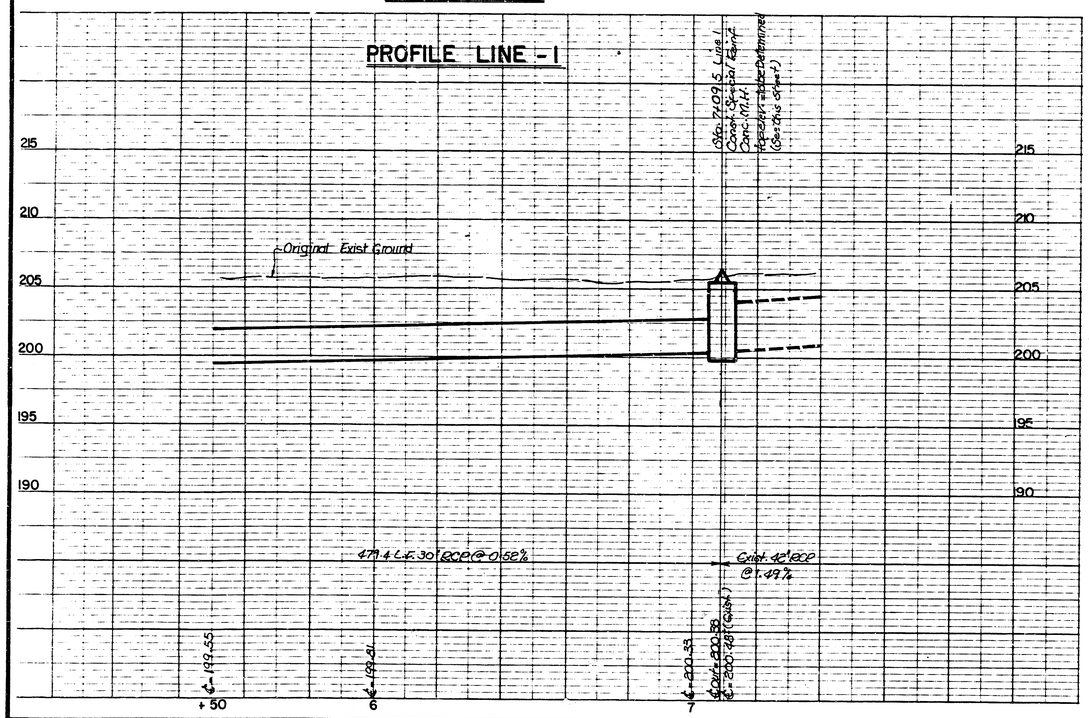

PROFILE LINE - 1

NOTE: SEE SHEET 4 FOR REQUIRED BRICK STACK AND C.O.W. STD. M.H. RING & COVER. TOP ELEV. OF RING & COVER SHALL BE SET IN FIELD BASED ON ACTUAL GROUND SURFACE.

REINFORCING SHALL BE CUT AS REQUIRED TO CLEAR R.C.P.

See Sheet 4 For Typical Reinf. around R.C.P.'s.

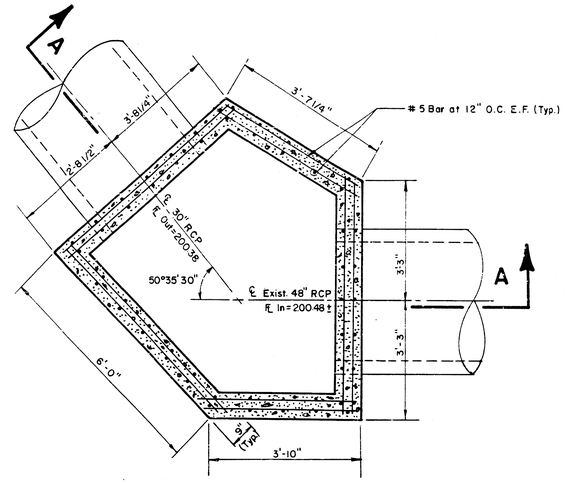

PLAN VIEW
No Scale

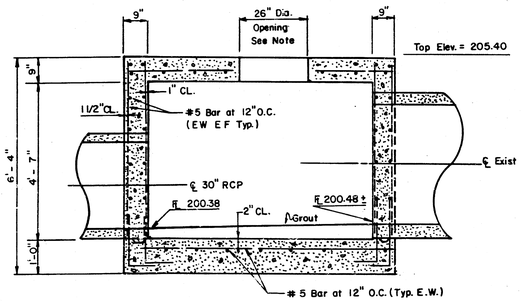

SECTION A - A
No Scale

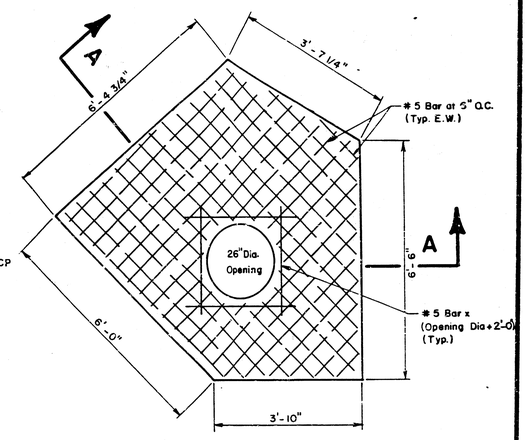

TOP SLAB PLAN
No Scale

3/5
M.K.E.C.

FILMED FROM THE BEST AVAILABLE COPY

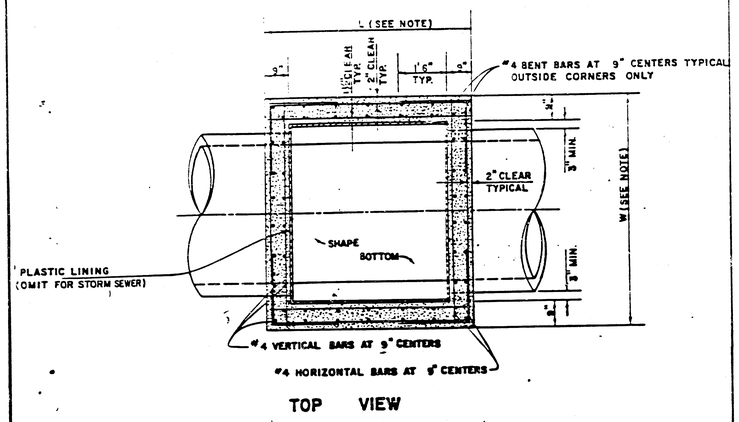

TOP VIEW

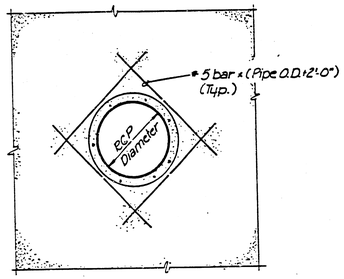

TYPICAL REINFORCING AT PIPE

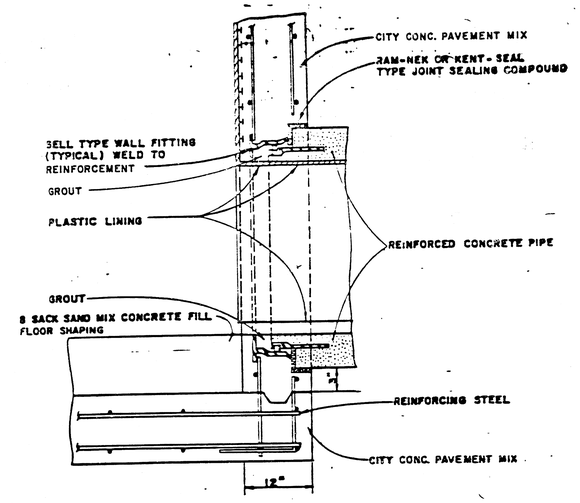

R.C.P. CONNECTION DETAIL
SANITARY SEWER ONLY

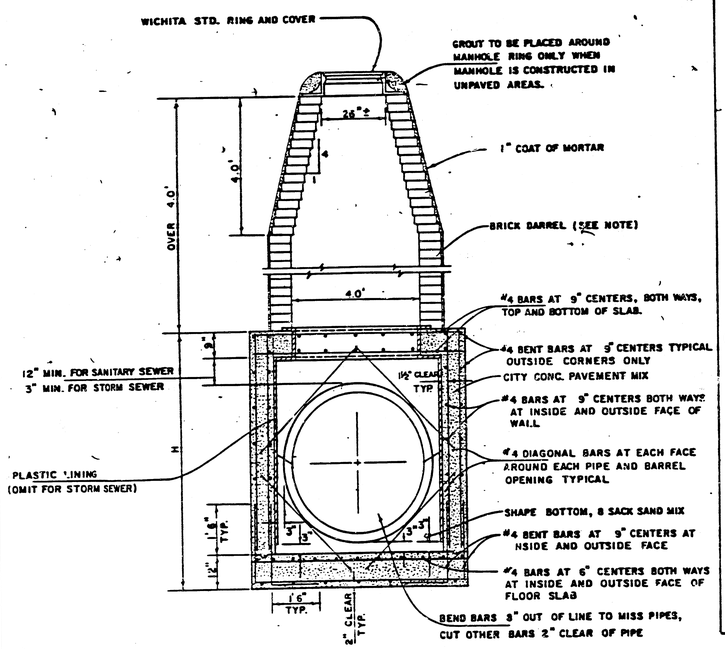

REINFORCED CONCRETE MANHOLE
DEPTH OF STACK: OVER 4.0'
SCALE 1" = 2'

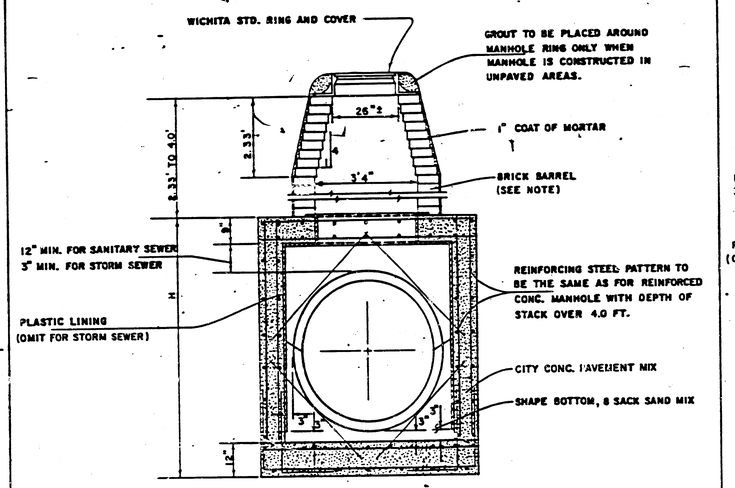

REINFORCED CONCRETE MANHOLE
DEPTH OF STACK: 2.33' TO 4.0'
SCALE 1" = 2'

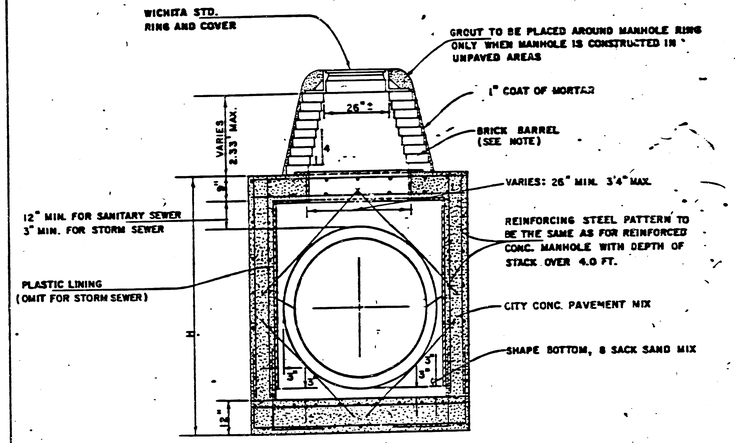

REINFORCED CONCRETE MANHOLE
DEPTH OF STACK: 0' TO 2.33'
SCALE 1" = 2'

NOTE :
BRICK BARRELS LESS THEN 16' DEEP SHALL HAVE 8" WALLS EXCEPT WHEN LOCATED WITHIN PUBLIC STREET OR ALLEY PAVEMENT THEN THE WALL SHALL BE 12" BRICK BARRELS MORE THEN 16' DEEP SHALL HAVE 12" WALLS. THE "L" AND "W" DIMENSIONS SHALL BE A MINIMUM OF 5'6" FOR BRICK BARRELS WITH 8" WALLS AND 6'2" FOR BRICK BARRELS WITH 12" WALLS WHEN THE BRICK BARRELS ARE OVER 4 FT. IN HEIGHT.

REVISIED 1-7-85

STANDARD DETAILS
REINFORCED CONCRETE MANHOLES
CITY OF WICHITA
FEBRUARY 1984

4/5

FILMED FROM THE BEST AVAILABLE COPY

REVISED MAY 1981
REVISED JAN. 1982

SEWER APPURTENANCES DETAILS

ADOPTED AS STANDARD DESIGN BY

City of Wichita, Kansas

TYPE "B" MANHOLE

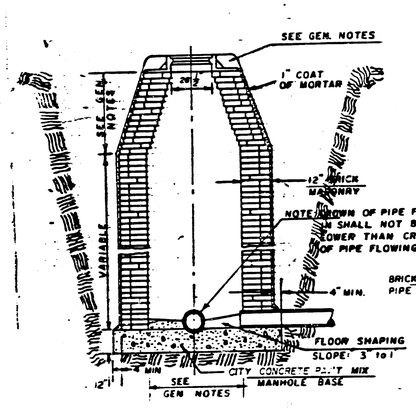

TYPE "B" INSIDE DROP MANHOLE

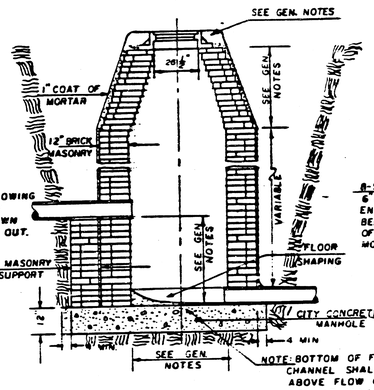

TYPE "B" OUTSIDE DROP MANHOLE

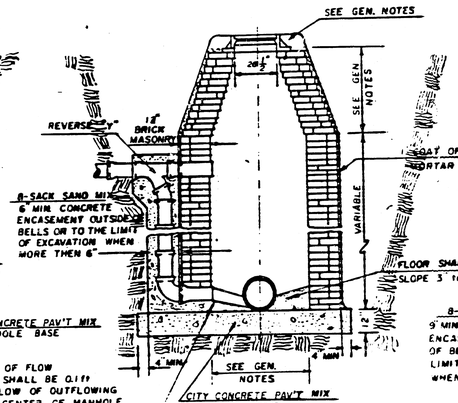

DETAIL OF OUTSIDE DROP CONSTRUCTED ON EXISTING MANHOLE

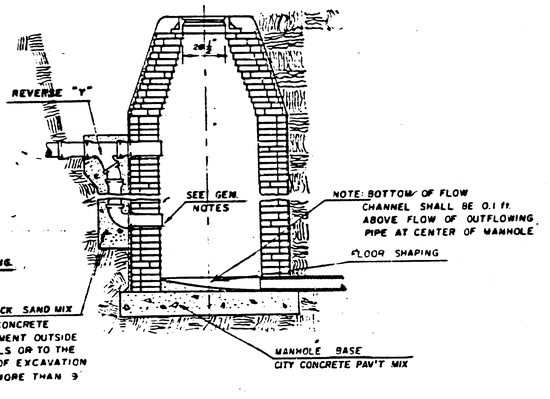

GENERAL NOTES

1. MORTAR USED IN MASONRY CONSTRUCTION SHALL CONTAIN 8 SACKS OF CEMENT PER CUBIC YARD. CONCRETE USED IN MANHOLE BASES SHALL CONFORM TO THE REQUIREMENTS OF CONCRETE FOR CONCRETE PAVEMENT CONSTRUCTION AS SPECIFIED IN THE CITY STANDARD PAVING SPECIFICATIONS USING CITY CONCRETE PAVEMENT MIX WITHOUT AIR ENTRAINING ADMIXTURE. MORTAR SHALL BE PLACED AROUND THE MANHOLE RING AS SHOWN ON THE DRAWINGS WHEN MANHOLES ARE CONSTRUCTED IN UNPAVED AREAS. TYPE "B" MANHOLES CAN BE USED ON SEWERS HAVING DEPTHS GREATER THAN 16' OR WHEN THE MANHOLE IS LOCATED IN PUBLIC STREET PAVEMENT. MANHOLES CONSTRUCTED WHERE PIPE SIZES ARE SMALLER THAN 24" SHALL HAVE AN INSIDE DIAMETER OF 4'. MANHOLES CONSTRUCTED WHERE PIPE SIZES ARE 24" OR LARGER SHALL HAVE AN INSIDE DIAMETER OF 5'. THE HEIGHT OF THE CORBELS ON 4' DIAMETER MANHOLES SHALL BE 4'. MANHOLES HAVING A DIAMETER OF 5' SHALL HAVE CORBELS 6' IN HEIGHT. COMPLETED MANHOLE SHALL BE WITHOUT LEAKS AND WATER TIGHT.

2. REINFORCING STEEL SHALL BE INSTALLED IN THE MANHOLE BASES AND SHALL CONSIST OF NO. 4 BARS PLACED ON 6" CENTERS IN BOTH DIRECTIONS. THE MANHOLE BASE REINFORCEMENT SHALL BE PLACED 6" ABOVE THE BOTTOM OF THE MANHOLE BASE. ALL COSTS FOR FURNISHING AND INSTALLING REINFORCING STEEL SHALL BE INCLUDED IN THE UNIT PRICE BID FOR THE MANHOLE.

3. OPENINGS SHALL BE CUT INTO THE MANHOLE WALL WHEN OUTSIDE DROPS ARE CONSTRUCTED ON EXISTING MANHOLES. SUCH OPENINGS CUT INTO EXISTING MANHOLES SHALL BE AS SMALL AS PRACTICAL TO FACILITATE INSTALLING AND GROUTING THE NEW PIPE IN PLACE. WATERSTOP GASKETS SHALL BE USED WITH P.V.C. AND A.B.S. COMPOSITE PIPE. THE NEW PIPE SHALL BE GROUTED INTO THE OPENING USING AN APPROVED NONSHRINK GROUT FOR THE FULL MANHOLE WALL THICKNESS. THE EXTERIOR OF THE COMPLETED CONNECTION SHALL BE SEALED WITH AN APPROVED BITUMINOUS COATING SUCH THAT THE CONNECTION WILL BE WATER TIGHT. FLOOR OF MANHOLE SHALL BE MODIFIED TO FORM NEW FLOW CHANNEL FOR THE NEW CONNECTION AS INDICATED BY THE DRAWING. THE VERTICAL DROP FROM THE LOWER PIPE ON SUCH OUTSIDE DROP CONNECTIONS SHALL NOT EXCEED 4' FOR INFLOWING PIPES SIZED 12" OR SMALLER AND 2' FOR INFLOWING PIPES SIZED LARGER THAN 12", EXCEPT THE CROWN OF THE LOWER PIPE SHALL NEVER BE SET BELOW THE CROWN OF ANY LARGER OUTFLOWING PIPE. THIS WORK, INCLUDING MODIFICATION OF MANHOLE FLOOR, SHALL BE PAID FOR AT THE UNIT PRICE BID FOR OUTSIDE DROP STACK CONSTRUCTED ON EXISTING MANHOLE.

4. THE FLOORS OF ALL MANHOLES SHALL BE SHAPED WITH FLOW CHANNELS SUCH THAT THE MANHOLES WILL BE SELF CLEANING AND FREE OF AREAS WHERE SOLIDS COULD BE DEPOSITED AS SEWAGE FLOWS THROUGH THE MANHOLE FROM ALL INLET PIPES TO THE OUTLET PIPE. FLOW CHANNELS SHALL BE FORMED TO MATCH THE BOTTOM HALVES OF THE INFLOWING PIPES AND THE OUTFLOWING PIPE AS SHOWN BY THE DRAWINGS EXCEPT FOR INSIDE DROP MANHOLES. FLOW CHANNELS FOR INSIDE DROP MANHOLES SHALL BE CONSTRUCTED AS INDICATED BY THE DRAWING. MANHOLE FLOORS SHALL HAVE SLOPES OF 3 INCHES PER FOOT IN THE AREAS OUTSIDE OF THE FLOW CHANNELS SLOPED TOWARD THE FLOW CHANNELS. PIPES LAID THROUGH MANHOLES SHALL HAVE THE TOP HALF REMOVED TO NEAT LINES FOR THE FULL INSIDE DIAMETER OF THE MANHOLE. MANHOLE FLOORS SHALL THEN BE SHAPED AROUND THE BOTTOM HALF OF THE PIPE WHICH FORMS THE FLOW CHANNEL.

5. PIPES INSTALLED WITHIN THE EXCAVATION MADE FOR THE MANHOLE SHALL BE CRADLED WITH CONCRETE TO THE LIMITS OF THE MANHOLE EXCAVATION. WHEN CLAY PIPE IS USED, THE CRADLE SHALL EXTEND TO THE FIRST JOINT OUTSIDE THE MANHOLE. THE CRADLE SHALL BE TERMINATED AT THE CLAY PIPE JOINT IN A MANNER WHICH WILL MAINTAIN THE FLEXIBILITY OF THE JOINT. COST OF CRADLE WITHIN MANHOLE EXCAVATION OR TO CLAY PIPE JOINTS ADJACENT TO MANHOLE SHALL BE INCLUDED IN THE UNIT PRICE BID FOR THE MANHOLE.

6. MANHOLE COVER CASTINGS AND MANHOLE FRAME CASTINGS SHALL CONFORM TO THE REQUIREMENTS AS INDICATED IN THE STANDARD SPECIFICATIONS AND AS SHOWN IN THE STANDARD DETAIL DRAWING.

7. THE VERTICAL DROP IN INSIDE DROP MANHOLES SHALL NOT EXCEED 4' FOR INFLOWING PIPES SIZED 12" OR SMALLER AND 2' FOR INFLOWING PIPES LARGER THAN 12". THE CROWNS OF INFLOWING PIPES SHALL NEVER BE SET LOWER THAN THE CROWN OF THE OUTFLOWING PIPE.

8. STANDARD MANHOLES TYPE "B" AND STANDARD INSIDE DROP MANHOLES TYPE "B" SHALL BE BID AS STANDARD MANHOLES FOR THE TYPE AND DIAMETER INDICATED. OUTSIDE DROP MANHOLES TYPE "B" SHALL BE BID AS STANDARD OUTSIDE DROP MANHOLES FOR THE TYPE AND DIAMETER INDICATED. ALL MANHOLE DIAMETERS WILL BE 4' UNLESS INDICATED OTHERWISE.

5/5

5/5

FILMED FROM THE BEST AVAILABLE COPY