PRIVATE STORM WATER SEWER

TO SERVE

Lot 1, GOEBEL BROS. 4th ADDITION

Project Number

371 PPS (607861)

CITY OF WICHITA, KANSAS

Michael E. Lindebak City Engineer

General Notes

1. Contractor will be required to provide notice to utility companies a minimum of twenty-four (24) hours prior to any excavation, as follows:

   Kansas One-Call 687-2470

   The Contractor must notify the following in case of an emergency:

Cablevision	262-4270
or	263-2061
K.P.L. Gas Service Company	263-7511
Kansas Gas & Electric Company	264-1141
Arkla Gas Company	942-8350
or	263-8161
Southwestern Bell Telephone Company	1-571-2611
City of Wichita Water Department	268-4908
City of Wichita Sewer Maintenance	268-4071)

2. Underground utility service lines and overhead utility pole lines are to be adjusted as necessary by others prior to construction, unless the plans specifically call for their adjustment by the Contractor. Existing utilities and their locations, as shown on the plans, represent the best information obtainable for design. Location information has been obtained from the various utility companies and is either from company record drawings or company-provided field locations. The Contractor will be required to work around existing utilities within the right-of-way which do not conflict with proposed construction.

3. Rubble from the removal of miscellaneous structures and excess excavation which is to be wasted shall be disposed of on sites to be provided by the Contractor. These sites shall be approved by the Engineer as to suitability, appearance and site location. Locations that, in the opinion of the Engineer, will leave an unsightly appearance will not be approved. All disposal sites must be approved by the Kansas Department of Health and Environment. Material either stockpiled or disposed of in a flood plain would require a Kansas State Board of Agriculture permit. Any material dumped in waters of the United States or wetlands is subject to U.S. Corps. of Engineers permitting regulations. Any material buried or stockpiled beyond approved construction limits would require additional archaeological investigations unless buried in a previously approved borrow location.

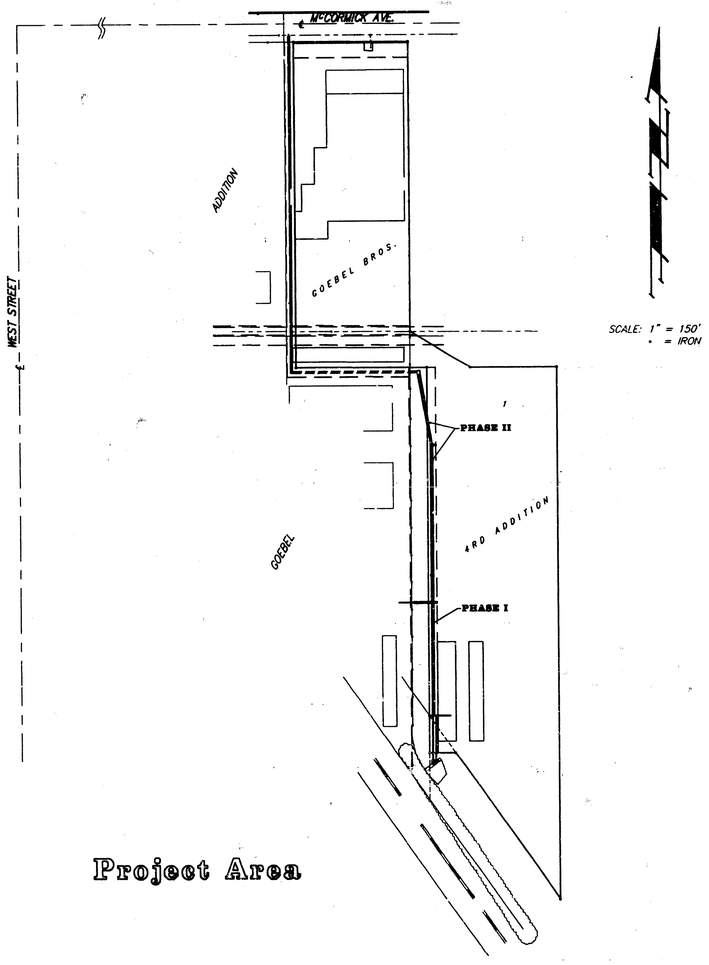

Project Area

SCALE: 1" = 150'
• = IRON

Sheet Index

1. TITLE SHEET
2. PLAN AND PROFILE
3. DETAIL SHEET

APPROVED AS NOTED
BY CITY ENGINEER OF WICHITA

Sanitary Sewers _____

Storm Sewers VRH 1/11/93

Driveway Approaches _____

Water Mains _____

Paving _____

NOTE TO CONTRACTORS

Inspection and testing for this project is to be provided by a Licensed Consulting Engineering Firm under contract with the Owner/Developer. Said inspection to be in accordance with the City of Wichita standard construction engineering practices and certified by a Licensed Professional Engineer. No work shall be performed in dedicated easements or public right-of-way by the Contractor without such inspection nor shall any work be commenced without written authorization by the City Engineer.

Booked
9-1-93
MCG
P-202

M. BRENT WOOTEN
LICENSED
6479
KANSAS
PROFESSIONAL ENGINEER

As Built 5-25-93

BAUGHMAN COMPANY P. A.
ENGINEERING & SURVEYING
316/262-7271 • 315 ELLIS • WICHITA, KANSAS 67211

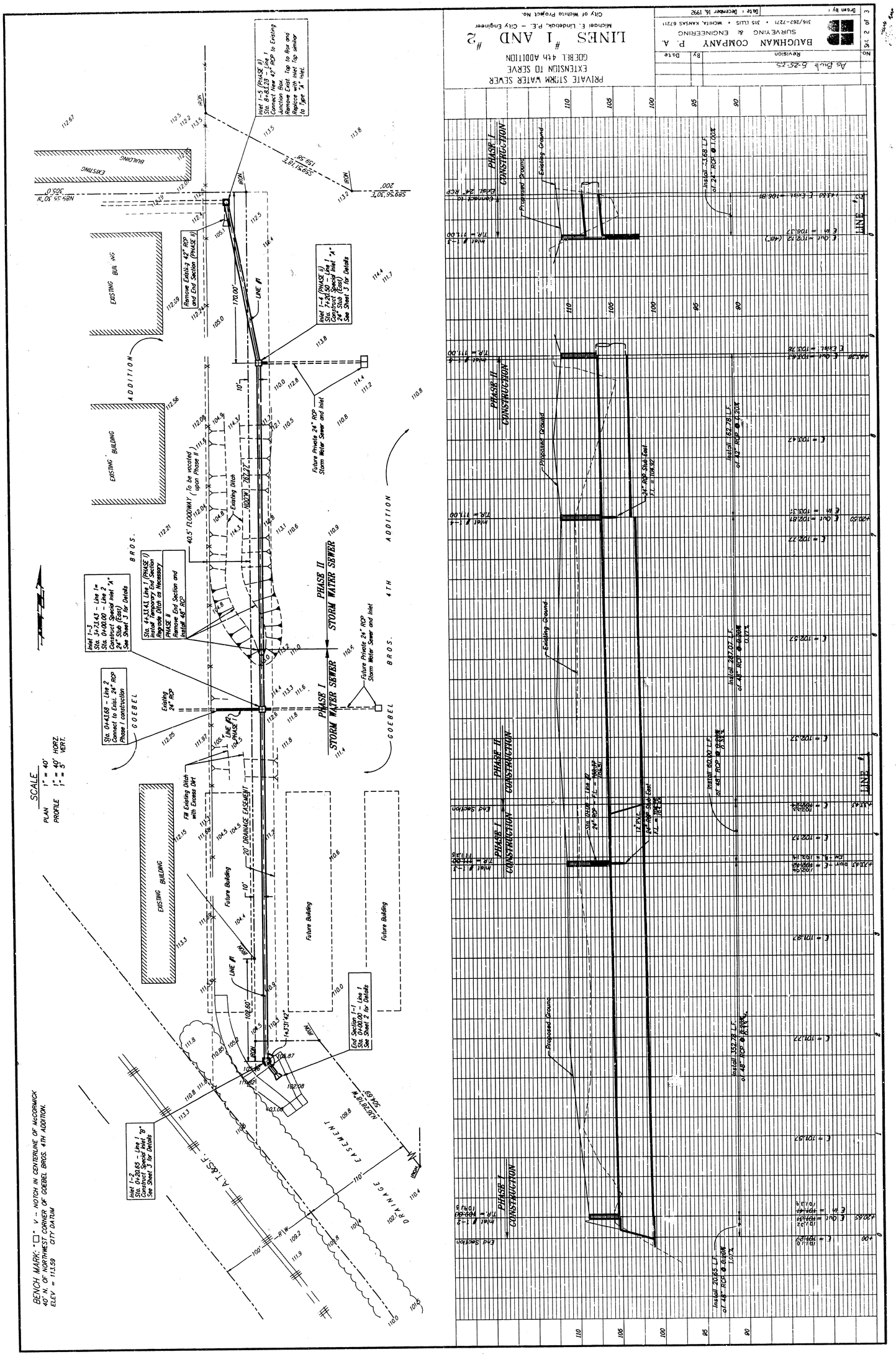

PRIVATE STORM WATER SEWER
EXTENSION TO SERVE
GOEBEL 4th ADDITION
LINES #1 AND #2
Michael E. Lindebak, P.E. – City Engineer
City of Wichita Project No.
BAUGHMAN COMPANY P. A.
SURVEYING & ENGINEERING
316/267-7271 • 315 ELLIS • WICHITA, KANSAS 67211
Date: December 16, 1992
Sht 2 of 3
As Built 6-25-25
SCALE
PLAN 1" = 40'
PROFILE 1" = 40' HORZ. 1" = 5' VERT.
BENCH MARK: "□" V – NOTCH IN CENTERLINE OF McCORMICK
40' N. OF NORTHWEST CORNER OF GOEBEL BROS. 4TH ADDITION.
ELEV = 113.59 CITY DATUM
PHASE I STORM WATER SEWER
PHASE II STORM WATER SEWER
GOEBEL BROS. 4TH ADDITION
EXISTING BUILDING
Future Building
DRAINAGE EASEMENT
A.T.&S.F.
LINE #1
LINE #2
PHASE I CONSTRUCTION
PHASE II CONSTRUCTION
Proposed Ground
Existing Ground

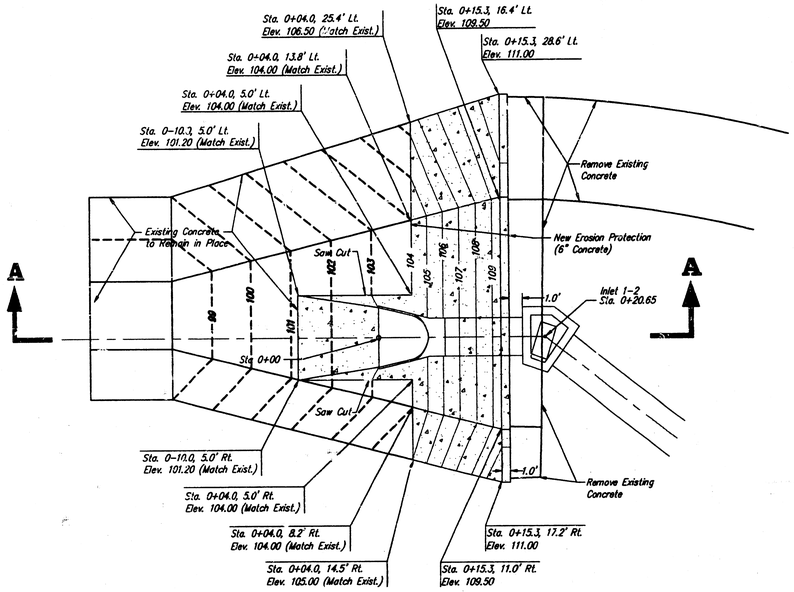

PLAN VIEW
Scale 1" = 8'

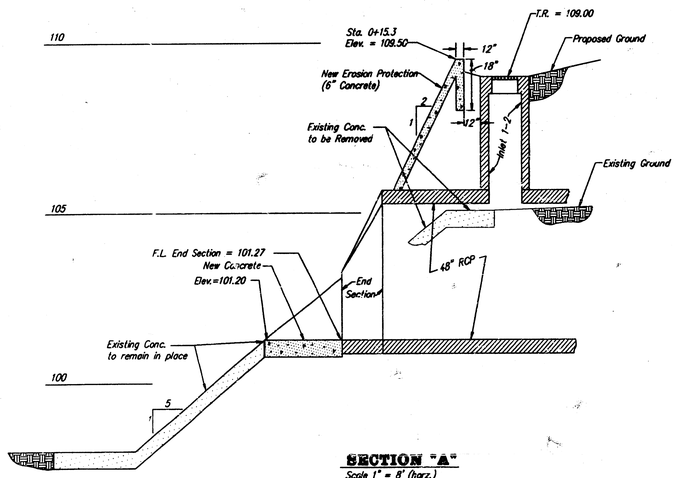

SECTION "A"
Scale 1" = 8' (horz.)
1" = 2' (vert.)

END SECTION #1-1 DETAIL

INLET SCHEDULE

INLET NUMBER	LENGTH "L"	WIDTH "W"
1-3	3.0'	6.0'
1-4	3.0'	6.0'
1-5	5.0'	6.0'

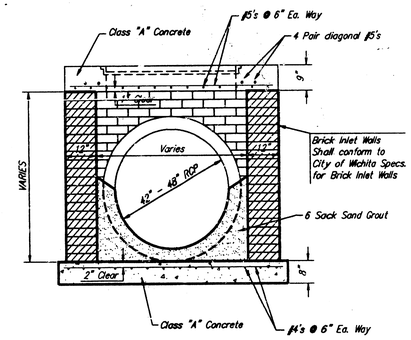

TYPICAL SECTION
SCALE: 1/2"=1'-0"

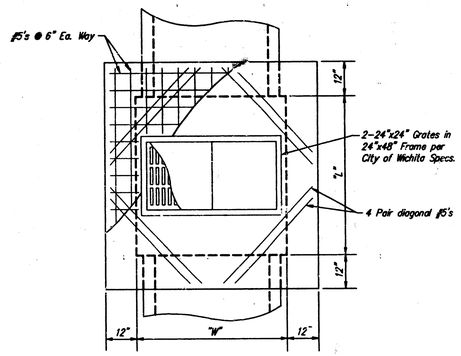

PLAN VIEW
TYPE "A" INLET
SCALE: 1/2"=1'-0"

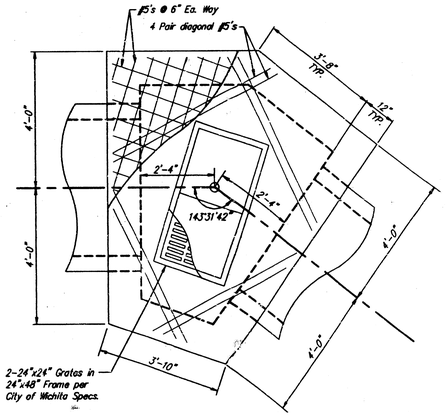

PLAN VIEW
TYPE "B" INLET
SCALE: 1/2"=1'-0"

INLET DETAILS

PRIVATE STORM WATER SEWER
EXTENSION TO SERVE
GOEBEL 4th ADDITION

DETAIL SHEET

Michael E. Lindebak, P.E. – City Engineer
City of Wichita Project No.

No.	Revision	By	Date

BAUGHMAN COMPANY P. A.
SURVEYING & ENGINEERING
316/682-7271 • 315 ELLIS • WICHITA, KANSAS 67211

Drawn by: | Date: December 16, 1982

Sht. 3 of 3