SHEET NO.	TOTAL SHEETS
1	4

PRIVATE STORM WATER SEWER IMPROVEMENTS

AT

KGE 1900 E. CENTRAL STORAGE YARD
CITY OF WICHITA PRIVATE PROJECT NO. 1002PPS (607861)

PLANS PREPARED BY
PROFESSIONAL ENGINEERING CONSULTANTS, P.A.
ENGINEERS
WICHITA, KANSAS

APRIL, 2000
PEC PROJECT NO. 36-00220-3040

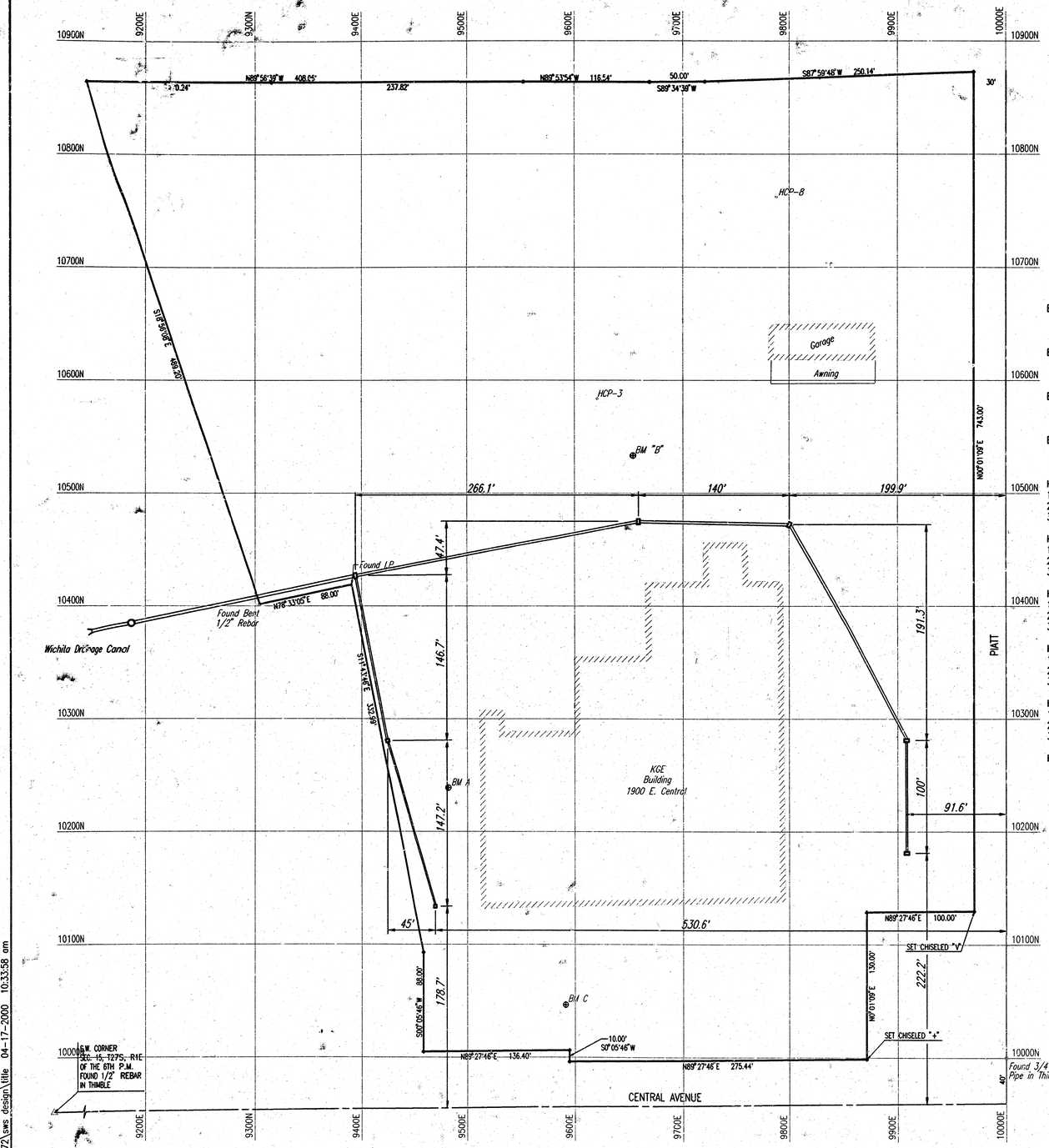

SCALE: 1"=50'

B.M.: CITY OF WICHITA BENCH MARK IN SOUTHEAST CORNER OF NORTH BRIDGE OF WICHITA DRAINAGE CANAL AND CENTRAL AVENUE.
ELEV.=1303.30 M.S.L.

B.M. "A": CHISELED "a" ON N.W. CORNER OF CONCRETE PAD FOR METAL STAIRWAY ON W. SIDE MAIN KGE BUILDING, S. OF RADIO TOWER.
ELEV.=1299.53 M.S.L.

B.M. "B": S.E. CORNER OF CONCRETE PAD FOR FUEL TANKS, N. OF MAIN KGE BUILDING.
ELEV.=1300.60 M.S.L.

B.M. "C": CHISELED "a" ON S. EDGE OF CONCRETE PAD FOR FLAG POLE ON S. SIDE KGE BUILDING.
ELEV.=1299.14 M.S.L.

HCP-1: 3/4" Bar, 10000 N, 10000 E
1. 39.50' S. to ℄ Intersection of Central and Piatt
2. 23.00' W. to Pk Nail and Washer in E. Face of Light Pole
3. 14.80' E.N.E. to S.E. Corner of Area Inlet

HCP-2: 120D Spike at ℄ Intersection of Piatt and Elm 10585.06 N, 10000.00 E
1. 33.50' S.S.E. to N.E. Corner Curb Inlet
2. 34.30' N.E. to S.W. Corner Curb Inlet
3. 29.00' N.E. to Pk Nail and Washer in S. Face of Power Pole

HCP-3: Pk Nail and Washer 20'± N.W. of Fuel Tanks 10583.74 N, 9621.91 E
1. 19.10' S.E. to N.W. Corner Steel Retaining Wall of Fuel Tanks
2. 31.30' S. to Pk Nail and Washer in N. Face of Power Pole
3. 36.80' N.N.W. to S.E. Retaining Wall of Power Pole Rock (E. Set)

HCP-4: Pk Nail and Washer at N.W. Corner Fenced Parking Lot 10551.60 N, 9407.50 E
1. 22.80' E. to 6' Chain Link Fence 2nd N. and S. Fence from the W.
2. 16.50' W. to E. Edge of Concrete Slab
3. 174.60' N. to P.I. Fence (N. and E.)

HCP-6: 120D Spike 95'± N. of N.W. Corner of Auto Zone 9892.26 N, 9520.00 E
1. 17.90' N. to S. Back of Curb on Central
2. 12.80' S. to N. Back of Curb Parking Lot of Auto Zone
3. 125.10' E. to ℄ Minnesota Street

HCP-8: 10762.09 N, 9787.89 E

APPROVED AS NOTED
BY CITY ENGINEER OF WICHITA

SANITARY SEWERS _____
STORM SEWERS VRH 4/17/00
DRIVEWAY APPROACHES _____
WATER MAINS _____
PAVING _____

NOTE TO CONTRACTOR

INSPECTION AND TESTING FOR THIS PROJECT IS TO BE PROVIDED BY A LICENSED CONSULTING ENGINEERING FIRM CONTRACTED BY THE CONTRACTOR. SAID INSPECTION TO BE IN ACCORDANCE WITH THE CITY OF WICHITA STANDARD CONSTRUCTION ENGINEERING PRACTICES AND CERTIFIED BY A LICENSED PROFESSIONAL ENGINEER. NO WORK SHALL BE PERFORMED IN DEDICATED EASEMENTS OR PUBLIC RIGHT-OF-WAY BY THE CONTRACTOR UNTIL SUCH INSPECTION IS ARRANGED FOR AND REQUIRED BONUS HAVE BEEN SUBMITTED TO AND APPROVED BY THE CITY NOR SHALL ANY WORK BE COMMENCED IN DEDICATED EASEMENTS OR PUBLIC RIGHT-OF-WAY WITHOUT WRITTEN AUTHORIZATION BY THE CITY ENGINEER. IMPROVEMENTS PERFORMED UNDER THIS PROJECT SHALL NOT BE ACCEPTED BY THE CITY UNTIL ALL APPLICABLE DOCUMENTATION HAS BEEN SUBMITTED TO THE CITY ENGINEER. THIS MAY INCLUDE: AS-BUILT DRAWINGS, INSPECTION LOGS, TEST DOCUMENTATION, TV TAPES, AND A CERTIFICATE OF COMPLETION. THE ABOVE SHALL BE PERFORMED BY THE CONSULTING FIRM CONTRACTED TO INSPECT THIS PROJECT.

DARWIN R. CROWE LICENSED PROFESSIONAL ENGINEER 14806 STATE OF KANSAS

BOOKED 4/10/01 MCG D-505

4/17/00

RECORD DRAWING

GENERAL NOTES

UNDERGROUND UTILITY SERVICE LINES AND OVERHEAD UTILITY POLE LINES ARE TO BE ADJUSTED AS NECESSARY BY OTHERS PRIOR TO CONSTRUCTION UNLESS THE PLANS SPECIFICALLY CALL FOR THEIR ADJUSTMENT BY THE CONTRACTOR. EXISTING UTILITIES AND THEIR LOCATION, AS SHOWN ON THE PLANS, REPRESENT THE BEST INFORMATION OBTAINABLE FOR DESIGN. LOCATION INFORMATION HAS BEEN OBTAINED FROM THE VARIOUS UTILITY COMPANIES AND IS EITHER FROM COMPANY RECORD DRAWINGS OR COMPANY PROVIDED FIELD LOCATIONS. THE CONTRACTOR WILL BE REQUIRED TO WORK AROUND EXISTING UTILITIES WITHIN THE RIGHT-OF-WAY WHICH DO NOT CONFLICT WITH PROPOSED CONSTRUCTION. CONTRACTOR SHALL SATISFY HIMSELF OF SUBSURFACE CONDITIONS PRIOR TO BIDDING.

RUBBLE FROM THE REMOVAL OF MISCELLANEOUS STRUCTURES SHALL BE DISPOSED OF ON SITES TO BE PROVIDED BY THE CONTRACTOR AND APPROVED AS NOTED.

ALL DISPOSAL SITES MUST BE APPROVED BY THE KANSAS DEPARTMENT OF HEALTH AND ENVIRONMENT. MATERIAL EITHER STOCKPILED OR DISPOSED OF IN A FLOOD PLAIN WOULD REQUIRE A KANSAS STATE BOARD OF AGRICULTURE PERMIT. ANY MATERIAL DUMPED IN WATERS OF THE UNITED STATES OR WETLANDS IS SUBJECT TO U.S. CORPS OF ENGINEERS PERMITTING REGULATIONS. ANY MATERIAL BURIED OR STOCKPILED BEYOND APPROVED CONSTRUCTION LIMITS WOULD REQUIRE ADDITIONAL ARCHEOLOGICAL INVESTIGATIONS UNLESS BURIED IN A PREVIOUSLY APPROVED BORROW LOCATION.

EXCESS EXCAVATED MATERIAL AND EXCESS TOPSOIL SHALL BECOME THE PROPERTY OF THE CONTRACTOR AND SHALL BE REMOVED FROM THE PROJECT SITE.

CONTRACTOR SHALL PROVIDE A MINIMUM FORTY-EIGHT (48) HOUR ADVANCE NOTICE (EXCLUDING WEEKENDS AND HOLIDAYS) PRIOR TO BEGINNING ANY EXCAVATION, TO KANSAS ONE-CALL SYSTEM, A UTILITY LOCATION SERVICE, AT (316) 687-2470 TO REQUEST THE FOLLOWING UTILITY COMPANIES TO LOCATE ALL EXISTING LINES WITHIN THE PROJECT AREA: K.G.S. GAS, PEOPLES NATURAL GAS, K.G.E. ELECTRIC, SOUTHWESTERN BELL TELEPHONE, MULTIMEDIA CABLEVISION, CITY OF WICHITA SEWER MAINTENANCE AND CITY OF WICHITA WATER DEPARTMENT.

THE CONTRACTOR SHALL BE RESPONSIBLE FOR PRESERVING PROPERTY IRONS. THE CONTRACTOR WILL BE REQUIRED TO RE-ESTABLISH ANY PROPERTY IRONS WHICH ARE DAMAGED OR DESTROYED BY HIS CONSTRUCTION OPERATIONS. SUCH IRONS SHALL BE RE-ESTABLISHED BY A LICENSED LAND SURVEYOR IN ACCORDANCE WITH STATE LAWS.

THE WATER DEPARTMENT SHALL FIELD LOCATE WATER VALVES ONE TIME DURING CONSTRUCTION WHEN REQUESTED BY THE CONTRACTOR. IT SHALL BE THE CONTRACTOR'S RESPONSIBILITY TO PRESERVE SUCH FIELD LOCATIONS DURING THE CONSTRUCTION PROCESS. WATER VALVES, WATER VALVE BOXES OR FIRE HYDRANTS DAMAGED DURING CONSTRUCTION SHALL BE REPAIRED BY THE CONTRACTOR AT HIS OWN EXPENSE.

ALL AREAS DISTURBED DURING CONSTRUCTION SHALL BE TEMPORARY SEEDED ACCORDING TO CITY OF WICHITA STANDARDS AND SPECIFICATIONS.

INLET LOCATIONS MAY BE ADJUSTED SLIGHTLY FROM WHERE SHOWN ON THE PLAN TO MINIMIZE CONFLICTS WITH UTILITIES, ETC., WITH PERMISSION OF THE OWNER. CONTRACTOR SHALL PROVIDE AS-BUILT LOCATIONS OF ANY STRUCTURES THAT ARE ADJUSTED IN THE FIELD.

CONTRACTOR SHALL REMOVE SUFFICIENT PAVEMENT AT INLET STRUCTURES TO GRADE FROM EXISTING PAVEMENT ELEVATION TO NEW INLET TOP ELEVATION. VERIFY LIMITS OF REMOVAL AND ACCEPTABLE PAVEMENT SLOPES WITH OWNER.

CONTRACTOR SHALL OBTAIN ALL NECESSARY PERMITS PRIOR TO BEGINNING CONSTRUCTION IN HIGHWAY R-O-W.

WITH THE OWNER'S PERMISSION, A GRAVEL OR OTHER PAVING MATERIAL MAY BE USED FOR PATCHING STORM SEWER TRENCHES.

CONTRACTOR SHALL RESTORE THE SITE TO PRE-PROJECT CONDITIONS, EXCEPT AS DIRECTED OTHERWISE BY OWNER. THIS SHALL INCLUDE, BUT NOT BE LIMITED TO RESETTING FENCES, GUARD POSTS, ETC.

DIMENSIONS TO INLETS SHOWN ON THIS SHEET ARE FOR USE BY THE OFFICE OF CENTRAL INSPECTION ONLY. CONTRACTOR SHALL STAKE PROJECT USING THE COORDINATES GIVEN ON THE PLAN.

CONTRACTOR SHALL TAKE NECESSARY STEPS TO PREVENT SEDIMENT FROM ENTERING THE STORM SEWER DURING CONSTRUCTION. INLET PROTECTION MAY BE REMOVED ONCE THE PAVEMENT AT INLETS HAS BEEN REPLACED.

DSNR: DAR OPER: BB SCALE: 1=50.00
O:\1999\99372\sws_design\title 04-17-2000 10:33:58 am

18-8-2-12

SHEET NO.	TOTAL SHEETS
2	4

10,446.30N, 9,497.50E
Sta. 11+00.00, SWS Sta. 1=
Sta. 40+00.00, SWS Sta. 1B
Construct Std. Area Inlet(Dbl.)
Top Elev.=111.49
℄ In=107.17 (SE)
℄ In=107.17 (S)
℄ Out=107.17 (W)
Install 249.66 L.F. 24" RCP SWS (NE)
Install 54.28 L.F. 10" PVC SWS (S)
See Sh. No. 3

10,392.02N, 9,497.50E
Sta. 40+54.28, SWS Sta. 1B
Construct Std. Area Inlet(Sngl.)
Top Elev.=111.59
℄ Out=108.54

10,455.60N, 9,695.20E
Sta. 50+61.6, SWS Sta. 1C
Construct Std. Area Inlet(Sngl.)
Top Elev.=111.80
℄ Out=108.62

10,433.82N, 9,827.55E
Sta. 14+54.40 SWS Sta. 1=
Sta. 60+00.00 SWS Sta. 1D
Construct Std. Area Inlet(Dbl.)
Top Elev.=112.12
℄ In=108.44 (SE)
℄ Out=108.34 (W)
See Sh. No. 3

10,495.89N, 9,742.00E
Sta. 13+49.40, SWS Sta. 1=
Sta. 50+00.00, SWS Sta. 1C
Construct Std. Area Inlet(Dbl.)
Top Elev.=111.44
℄ In=108.02 (E&S)
℄ Out=107.92 (W)
See Sh. No. 3

10,356.20N, 9,827.55E
Sta. 60+76.55, SWS Sta. 1D
Construct Std. Area Inlet(Sngl.)
Top Elev.=112.75
℄ Out=109.22 (N)

10,249.20N, 9,827.55E
Sta. 61+84.05, SWS Sta. 1D
Construct Std. Area Inlet(Sngl.)
Top Elev.=112.66
℄ Out=110.32 (N)

10,337.74N, 9497.50E
Sta. 41+08.56, SWS Sta. 1B
Construct Std. Area Inlet(Sngl.)
Top Elev.=111.41
℄ Out=109.91

10,281.25N, 9,908.39E
Sta. 16+26.68, SWS Sta. 1
Construct Std. Area Inlet(Dbl.)
Top Elev.=112.66
℄ In=109.06 (S)
℄ Out=108.96 (NW)
Install 100.0 L.F. 18" RCP SWS (S)
See Sh. No. 3

10,181.25N, 9827.55E
Sta. 62+52, SWS Sta. 1D
Construct Std. Area Inlet(Sngl.)
Top Elev.=112.52
℄ Out=111.02 (N)

10,181.25N, 9,908.55E
Sta. 17+26.70, SWS Sta. 1
Construct Std. Area Inlet(Dbl.)
Top Elev.=112.69
℄ Out=109.58 (NW)
See Sh. No. 3

10,428.81N, 9,400.13E
Sta. 10+00.00, SWS Sta. 1=
Sta. 30+00.00, SWS Sta. 1A
Construct Std. Area inlet(Dbl.)
Top Elev. = 111.20
℄ In=106.87 (E)
℄ In=106.87 (S)
℄ Out=106.87 (W)
Install 100.0 L.F. 24" RCP SWS (E)
Install 149.4 L.F. 18" RCP SWS (S)
See Sh. No. 3

10,281.55N, 9,426.50E
Sta. 31+49.40, SWS Sta. 1A
Construct Std. Area Inlet(Sngl.)
Top Elev. = 111.64
℄ In=107.42 (S)
℄ Out=107.32 (N)
Install 73.4 L.F. 15" RCP SWS (S)
See Sh. No. 3

10,209.74N, 9,441.50E
Sta. 32+22.80, SWS Sta. 1A
Construct Std. Area Inlet(Sngl.)
Top Elev. = 111.29
℄ Out=107.71 (N)
Install 75.3 L.F. 15" RCP(S)

10,135.74N, 9,455.50E
Sta. 32+98.10, SWS Sta. 1A
Construct Std. Area Inlet(Sngl.)
Top Elev. = 111.00
℄ Out=108.00 (N)
See Sh. No. 3

Sta. 41+16, 48' Rt., @ Drainage Canal=
Sta. 7+54.10, SWS Line No. 1
Install 30" R.C. End Section on 2'x9'x4' Conc. Toewall
℄=96.65 (Canal Datum)
Install 35 L.F. 30" RCP SWS(E)
See Sh. No. 3

Sta. 41+14, 83' Rt., @ Drainage Canal=
Sta. 7+89.10, SWS Line No. 1
Construct Type 'P' Manhole (5')
Top Elev.=112.00 (Canal Datum)
℄ In=106.55 (E) (Canal Datum)
℄ Out=97.30 (W) (Canal Datum)
Install 210.9 L.F. 30" RCP SWS (E)
See Sh. No. 4

Install 15' Wide x 40' Long Outfall Protection using "PYRAMAT" Erosion Control Matrix over 6" Deep "V" Ditch, 10' Wide. See Detail Sh. No. 3.

Wichita Drainage Canal @ See C.O.W. Project No. 468-82950

Wichita Drainage Canal Improvements by Others

CAUTION!!! 54" Sanitary Sewer

I-135 (N.B.) Ovhd.

I-135 On-Ramp

Slope

41+00

42+00

30" RCP @2.43%

30" RCP @0.15%

24" RCP @ 0.30%

105.54' - 24" RCP @ 0.30%

172.28' - 24" RCP @ 0.30%

77' - 12" CMP @ 1.00%

107.5' - 8" PVC @ 1.02%

67.95' - 8" PVC @ 1.02%

61.57 L.F. 15" PVC Pipe @ 0.30%

18" RCP @0.30%

15" RCP @0.30%

10" PVC @ 0.30%

8" PVC @ 0.30%

Found Bent 1/2" Rebar

Found I.P.

6' Chain Link Fence

7' Wrought Iron Fence

8' Wrought Iron Fence

Retaining Wall w/ 3' and 6' Chain Link Fence

Concrete Sidewalk

Gate

Slide Gate

Guard Posts

Standup Tanks

3 Boxes

Area Inlet A Top=1300.01 ℄=1297.01

Area Inlet B Top=1299.20

Area Inlet SW Top=1296.83 ℄=1294.23

Area Inlet 12" Dia. Top=1299.12

Area Inlet Top=1299.89

Curb Inlet Top=1300.56

Curb Inlet Top=1298.29

SS MH 430 Top=1300.10 ℄ In=1293.10(W) ℄ Out=1293.05(E)

SS MH 465 Top=1300.19 ℄ In=1292.84(N/W) ℄ Out=1292.78(E)

SS MH E=98.67

Monitoring Wells

Fuel Tank

Air Stripper

KGE Building

KGE Mascot

Metal Steps

Metal Stairs

Ramp

Concrete Dock

Ret. Wall

Bun Ret. Wall

Mon. Well

Spool Storage Area

Wire Spool Storage Area

Wire Spool Insulator

Plastic Cond.

Steel Cond.

Gravel Ditch

Dumpster

Standup Tanks

Flag Pole

Spot Light

Landscape Timbers

Flowers

Bushes

Trees

Concrete Sidewalk

Asphalt

Concrete

Gravel

Fence

Radio Tower

Stairs

Ramp

Curb

Gutter

Sign

Gate Key Pad

Mon. Well

Air Stripper

Retaining Wall

Guard Posts

Slide Gate

Monitoring Wells

Area Inlet

Curb Inlet

Flowers

Landscape Timb

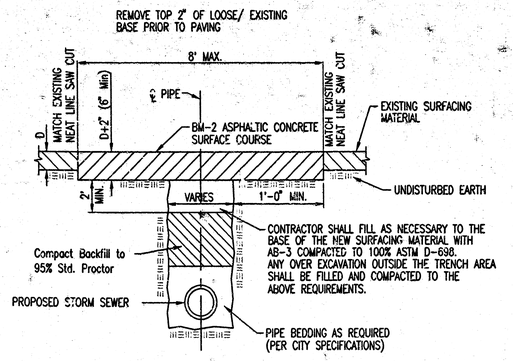

PAVEMENT REMOVAL AND REPLACEMENT DETAIL
ASPHALT PAVEMENT

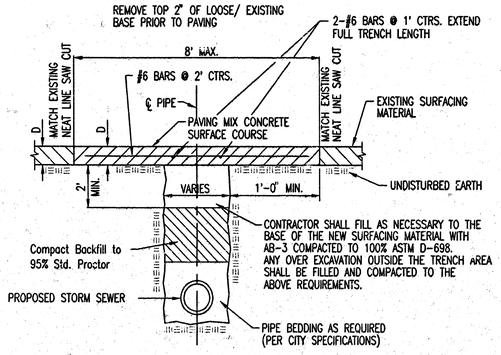

PAVEMENT REMOVAL AND REPLACEMENT DETAIL
CONCRETE PAVEMENT

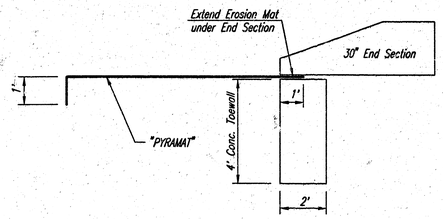

END SECTION CONCRETE TOEWALL

Note: The end section and toewall shall be constructed at the beginning of the 3:1 bank slope as shown in the City Project plans

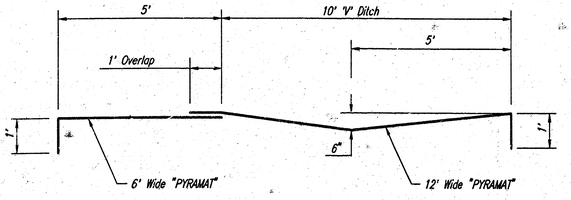

OUTFALL PROTECTION DITCH

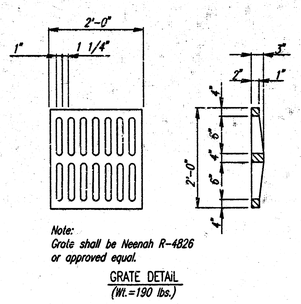

Note: Grate shall be Neenah R-4826 or approved equal.

GRATE DETAIL
(Wt.=190 lbs.)

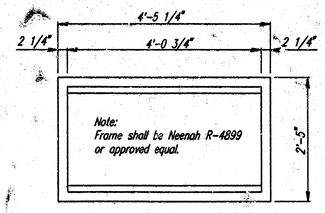

FRAME DETAIL (DOUBLE)
(Wt.=340 lbs.)

Note: Frame to mate with 2 Neenah R-4826 Grates or approved equal.

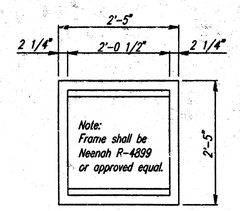

FRAME DETAIL (SINGLE)
(Wt.=220 lbs.)

Note: Frame to mate with 1 Neenah R-4826 Grate or approved equal.

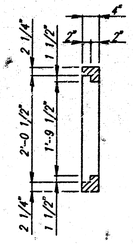

SHEET NO.	TOTAL SHEETS
3	4

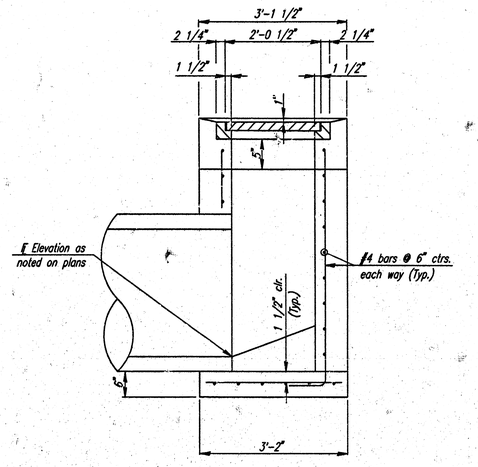

SECTION B-B

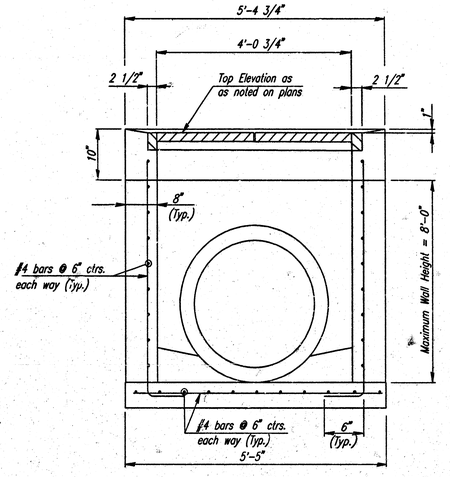

SECTION A-A

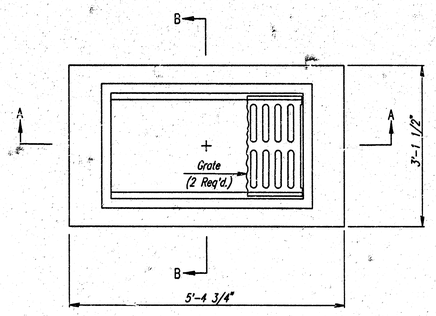

PLAN (DOUBLE)

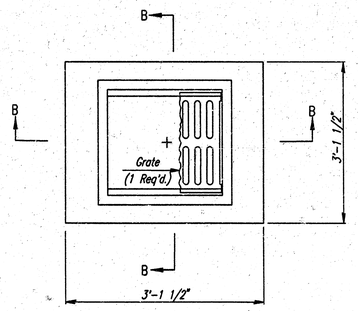

PLAN (SINGLE)

GENERAL NOTES

CONCRETE SHALL HAVE A MINIMUM 28 DAY COMPRESSIVE STRENGTH OF 4000 PSI. ALL PIPES SHALL BE FLUSH CUT PRIOR TO BEING CAST INTO WALLS.

REINFORCING STEEL SHALL BE GRADE 60, A.S.T.M. A615. ALL DIMENSIONS RELATIVE TO PLACEMENT OF REINFORCING ARE TO THE CENTERLINE OF BARS UNLESS OTHERWISE NOTED.

INLET CASTINGS SHALL BE MANUFACTURED USING DUCTILE IRON CONFORMING TO ASTM A536-80 GRADE 65-45-12. DIMENSIONS AND WEIGHTS SHOWN ON THE DETAILED DRAWINGS SHALL BE CONSIDERED AS MINIMUM REQUIREMENTS AND ANY DEVIATIONS FROM THE DIMENSIONS SHOWN MUST BE SPECIFICALLY APPROVED. THE FINISHED CASTINGS SHALL BE OF UNIFORM QUALITY, FREE FROM BLOWHOLES, POROSITY, HARD SPOTS, SHRINKAGE DISTORTIONS OR OTHER DEFECTS.

INLET FLOOR SHALL BE SHAPED WITH UNREINFORCED CONCRETE (8 SACK SAND MIX) TO CREATE FLOW CHANNELS AND TO INCREASE HYDRAULIC EFFICIENCY SUCH THAT THE INLET WILL BE SELF CLEANING BETWEEN ALL INLET AND/OR OUTLET PIPES.

PIPES ENTERING EXISTING STRUCTURE SHALL BE CENTERED ON INSIDE FACE OF WALL.

ALL EXPOSED STRUCTURAL STEEL SHALL BE PAINTED WITH A COAT OF INORGANIC ZINC PRIMER AND THEN WITH A TOP COAT OF OR A FIELD COAT OF ORGANIC ZINC. EACH COAT TO BE 3 TO 4 MILS. STRUCTURAL STEEL USED TO FABRICATE THE SPECIAL AREA INLET FRAME SHALL COMPLY WITH A.S.T.M. A36. WELDING SHALL COMFORM TO THE STRUCTURAL WELDING CODE A.W.S. D1.1-88.

STANDARD AREA INLET
(SINGLE & DOUBLE)

12 OCT 00

RECORD DRAWING

KGE STORAGE YARD

MISCELLANEOUS DETAILS

Professional Engineering Consultants, P.A.
302 S. TOPEKA • WICHITA, KANSAS 67202
316-262-2691 • FAX 316-262-3003

Designed by	DRC	Checked by	
Drawn by	DRC	Date APR., 2000	Job No. 00220

DSNR: DAR OPER: KER SCALE: 1=1.00
Q:\1999\99372\sws design\DETAILS 04-14-2000 03:16:40 pm

SHEET NO.	TOTAL SHEETS
4	4

SEWER APPURTENANCES DETAILS

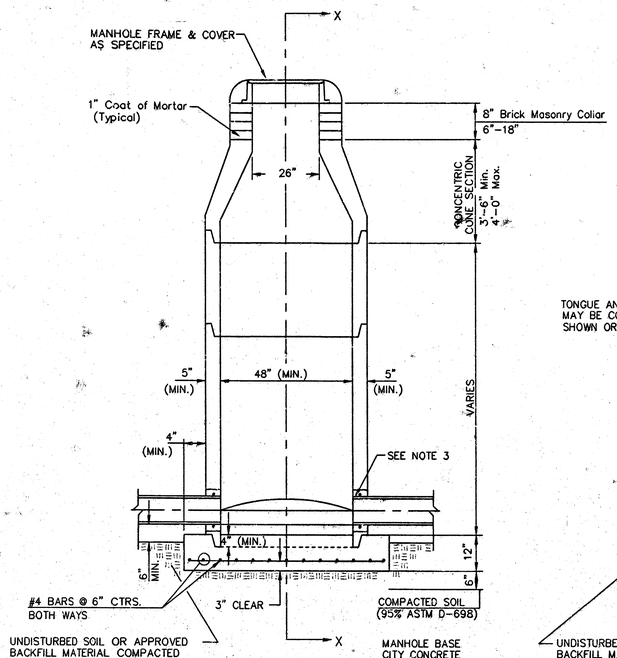

TYPE P
STANDARD MANHOLE

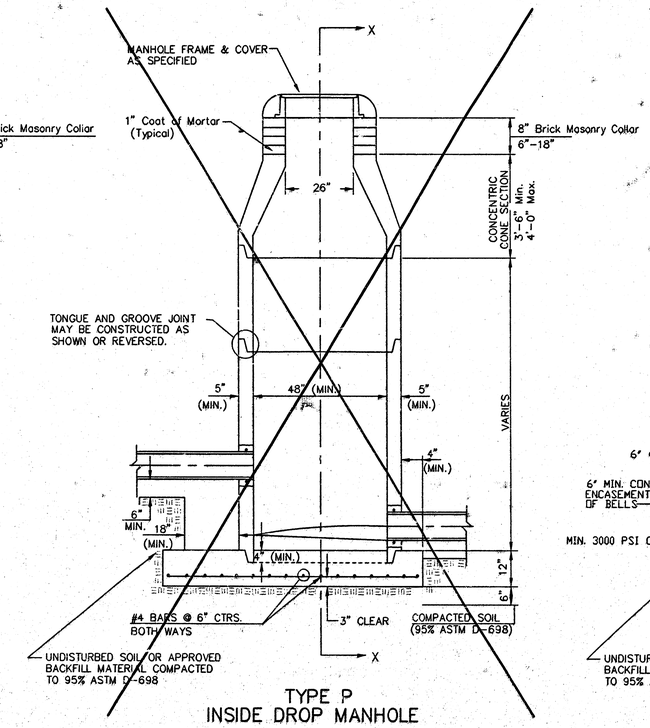

TYPE P
INSIDE DROP MANHOLE

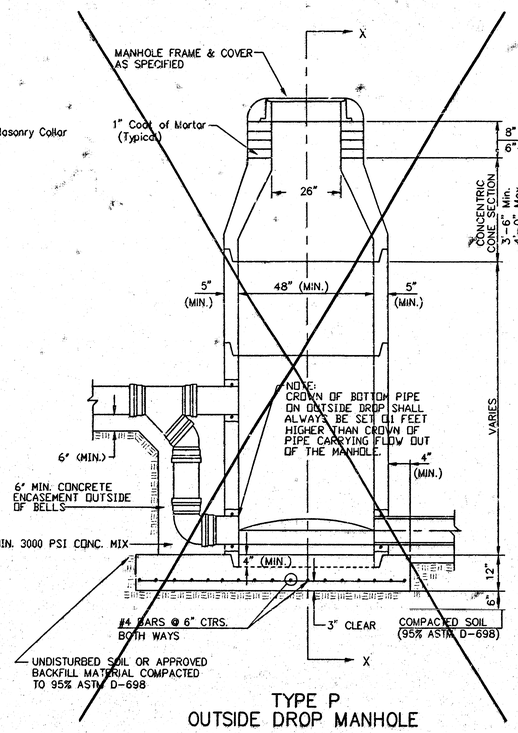

TYPE P
OUTSIDE DROP MANHOLE

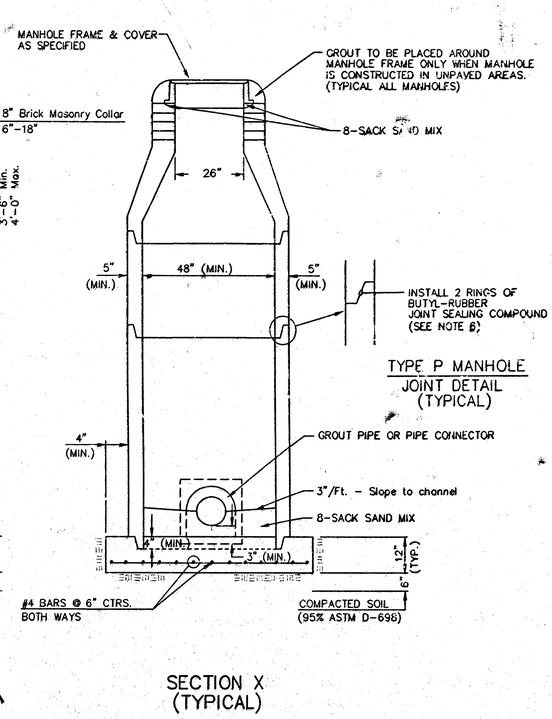

SECTION X
(TYPICAL)

GENERAL NOTES

PRECAST MANHOLE NOTES

1. ALL PRECAST CONCRETE MANHOLE SECTIONS SHALL CONFORM TO THE LATEST REVISIONS OF A.S.T.M. C478 AS MODIFIED BY THE SPECIFICATIONS.
2. NON-SHRINK GROUT SHALL BE NON-METALLIC TYPE.
3. APPROVED FLEXIBLE WATERSTOP GASKETS SHALL BE INSTALLED TO JOIN THE SEWER TO THE MANHOLE WALL WHEN A.B.S. COMPOSITE PIPE OR P.V.C. PIPE IS USED. FOR OTHER TYPES OF PIPE THE SEWER SHALL BE GROUTED IN PLACE WITH NON-SHRINK GROUT. ~~THE SEWER PIPE SHALL BE SUPPORTED WITH CONCRETE ENCASEMENT A MINIMUM OF 3 FEET FROM THE MANHOLE WALL AND TO THE FIRST JOINT FOR V.C.P. SUCH THAT THE JOINT REMAINS FLEXIBLE.~~
4. ~~ALL INSIDE SURFACES OF THE CONCRETE MANHOLE WHICH WOULD BE EXPOSED TO SEWER GAS SHALL BE COATED WITH 2 COATS TNEMEC SERIES 66 HI-BUILD EPOXOLINE, DRY THICKNESS OF 8 MILS (MIN.)~~
5. ~~EXTERIOR MANHOLE WALLS SHALL BE COATED WITH 1 COAT MOBILARMA 633 BITUMINOUS COATING.~~
6. ~~JOINT SEALING COMPOUND SHALL BE KENT SEAL NO. 2 OR APPROVED EQUAL~~
7. PRECAST MANHOLES SHALL BE SET AT LEAST 4 INCHES INTO THE MANHOLE BASE.
8. TOP OF MANHOLE FLOOR SLAB SHALL BE AT LEAST 3 INCHES BELOW THE FLOW LINE OF THE OUTLET PIPE TO INSURE SUFFICIENT MINIMUM THICKNESS OF SHAPED INVERT.
9. LIFTING HOLES SHALL BE FILLED WITH NON-SHRINK GROUT AND THE INTERIOR SURFACE COATED AS SPECIFIED.
10. MORTAR USED IN MASONRY CONSTRUCTION SHALL CONTAIN 8 SACKS OF CEMENT PER CUBIC YARD. CONCRETE USED IN MANHOLE BASES SHALL CONFORM TO THE REQUIREMENTS OF CONCRETE FOR CONCRETE PAVEMENT CONSTRUCTION AS SPECIFIED IN THE CITY STANDARD PAVING SPECIFICATIONS USING CITY CONCRETE PAVEMENT MIX WITHOUT AIR ENTRAINING ADMIXTURE. MORTAR SHALL BE PLACED AROUND THE MANHOLE RING AS SHOWN ON THE DRAWINGS WHEN MANHOLES ARE CONSTRUCTED IN UNPAVED AREAS. MANHOLES CONSTRUCTED WHERE PIPE SIZES ARE SMALLER THAN 24" SHALL HAVE AN INSIDE DIAMETER OF 4'. MANHOLES CONSTRUCTED WHERE PIPE SIZES ARE 24" OR LARGER SHALL HAVE AN INSIDE DIAMETER OF 5'. COMPLETED MANHOLE SHALL BE WITHOUT LEAKS AND WATER TIGHT.
11. REINFORCING STEEL SHALL BE INSTALLED IN THE MANHOLE BASES AND SHALL CONSIST OF NO. 4 BARS PLACED ON 6" CENTERS IN BOTH DIRECTIONS. THE MANHOLE BASE REINFORCEMENT SHALL BE PLACED AT LEAST 3" ABOVE THE BOTTOM OF THE MANHOLE BASE. ALL COSTS FOR FURNISHING AND INSTALLING REINFORCING STEEL SHALL BE INCLUDED IN THE UNIT PRICE BID FOR THE MANHOLE.
12. OPENINGS SHALL BE CUT INTO THE MANHOLE WALL WHEN OUTSIDE DROPS ARE CONSTRUCTED ON EXISTING MANHOLES. SUCH OPENINGS CUT INTO EXISTING MANHOLES SHALL BE AS SMALL AS PRACTICAL TO FACILITATE INSTALLING AND GROUTING THE NEW PIPE IN PLACE. WATERSTOP GASKETS SHALL BE USED WITH P.V.C. AND A.B.S. COMPOSITE PIPE. THE NEW PIPE SHALL BE GROUTED INTO THE OPENING USING AN APPROVED NONSHRINK GROUT FOR THE FULL MANHOLE WALL THICKNESS. THE EXTERIOR OF THE COMPLETED CONNECTION SHALL BE SEALED WITH AN APPROVED BITUMINOUS COATING SUCH THAT THE CONNECTION WILL BE WATER TIGHT. FLOOR OF MANHOLE SHALL BE MODIFIED TO FORM NEW FLOW CHANNEL FOR THE NEW CONNECTION AS INDICATED BY THE DRAWING. THIS WORK, INCLUDING MODIFICATION OF MANHOLE FLOOR, SHALL BE PAID FOR AT THE UNIT PRICE BID FOR OUTSIDE DROP STACK CONSTRUCTED ON EXISTING MANHOLE.
13. THE FLOORS OF ALL MANHOLES SHALL BE SHAPED WITH FLOW CHANNELS SUCH THAT THE MANHOLES WILL BE SELF CLEANING AND FREE OF AREAS WHERE SOLIDS COULD BE DEPOSITED AS SEWAGE FLOWS THROUGH THE MANHOLE FROM ALL INLET PIPES TO THE OUTLET PIPE. FLOW CHANNELS SHALL BE FORMED TO MATCH THE BOTTOM HALVES OF THE INFLOWING PIPES AND THE OUTFLOWING PIPE AS SHOWN BY THE DRAWINGS EXCEPT FOR INSIDE DROP MANHOLES. FLOW CHANNELS FOR INSIDE DROP MANHOLES SHALL BE CONSTRUCTED AS INDICATED BY THE DRAWING. MANHOLE FLOORS SHALL HAVE SLOPES OF 3 INCHES PER FOOT IN THE AREAS OUTSIDE OF THE FLOW CHANNELS SLOPED TOWARD THE FLOW CHANNELS. ~~PIPES LAID THROUGH MANHOLES SHALL HAVE THE TOP HALF REMOVED TO NEAT LINES FOR THE FULL INSIDE DIAMETER OF THE MANHOLE. MANHOLE FLOORS SHALL THEN BE SHAPED AROUND THE BOTTOM HALF OF THE PIPE WHICH FORMS THE FLOW CHANNEL.~~
14. ~~PIPES~~ INSTALLED WITHIN THE EXCAVATION MADE FOR THE MANHOLE SHALL ~~BE CRADLED WITH~~ CONCRETE TO THE LIMITS OF THE MANHOLE EXCAVATION. ~~WHEN CLAY PIPE IS USED, THE CRADLE SHALL EXTEND TO THE FIRST JOINT OUTSIDE THE MANHOLE. THE CRADLE SHALL BE TERMINATED AT THE CLAY PIPE JOINT IN A MANNER WHICH WILL MAINTAIN THE FLEXIBILITY OF THE JOINT. COST OF CRADLE WITHIN MANHOLE EXCAVATION OR TO CLAY PIPE JOINTS ADJACENT TO MANHOLE SHALL BE INCLUDED IN THE UNIT PRICE BID FOR THE MANHOLE.~~
15. MANHOLE COVER CASTINGS AND MANHOLE FRAME CASTINGS SHALL CONFORM TO THE REQUIREMENTS AS INDICATED IN THE STANDARD SPECIFICATIONS AND AS SHOWN IN THE STANDARD DETAIL DRAWING.
16. THE VERTICAL DROP IN INSIDE DROP MANHOLES SHALL NOT EXCEED 2' FOR INFLOWING PIPES SIZED 12" OR SMALLER AND 2' FOR INFLOWING PIPES LARGER THAN 12". THE CROWNS OF INFLOWING PIPES SHALL NEVER BE SET LOWER THAN THE CROWN OF THE OUTFLOWING PIPE.
17. ~~STANDARD MANHOLES AND STANDARD INSIDE DROP MANHOLES SHALL BE BID AS STANDARD MANHOLES FOR THE TYPE AND DIAMETER INDICATED. OUTSIDE DROP MANHOLES SHALL BE BID AS STANDARD OUTSIDE DROP MANHOLES FOR THE TYPE AND DIAMETER INDICATED.~~ ALL MANHOLE ~~DIAMETERS~~ WILL BE 4' UNLESS INDICATED OTHERWISE.
18. A BRICK MASONRY COLLAR SHALL BE INSTALLED BETWEEN THE CAST IRON FRAME AND THE CONCENTRIC CONE. THE COLLAR WILL HAVE 8" WALLS AND A VERTICAL HEIGHT OF 6" MINIMUM AND 18" MAXIMUM. A 1" COAT OF MORTAR WILL BE PLASTERED ON THE OUTSIDE OF THE COLLAR. THE USE OF PRE-CAST CONCRETE SPACERS FOR MANHOLE TOP ADJUSTMENT IS ALSO ALLOWED.

12 OCT 00

RECORD DRAWING

THE CITY OF WICHITA

CITY ENGINEER'S OFFICE
CITY HALL - SEVENTH FLOOR
455 NORTH MAIN STREET
WICHITA, KANSAS 67202
(316) 268-4501
(316) 268-4114 FAX

STANDARD TYPE 'P' MANHOLES

M. E. LINDEBAK P.E. - CITY ENGINEER

PROJECT NUMBER	INDEX CODE
1002PPS (607861)	
DATE: MAR 96	SHEET 4 OF 4

18 08 00 JS

DSNR: DAR OPER: KER SCALE: 1=1.00
O:\1999\99372\sws design\manhole 04-14-2000 03:18:15 pm