CITY OF WICHITA, KANSAS

STORM SEWER IMPROVEMENTS

TO SERVE PART OF LOT 1, METRO WEST INDUSTRIAL PARK ADDITION TO WICHITA, KANSAS

PRIVATE PROJECT NO.: 536PPS (607861)

INDEX:

SHEET 1	TITLE SHEET
SHEET 2	PLAN-PROFILE SHEET
SHEET 3	DETAIL SHEET

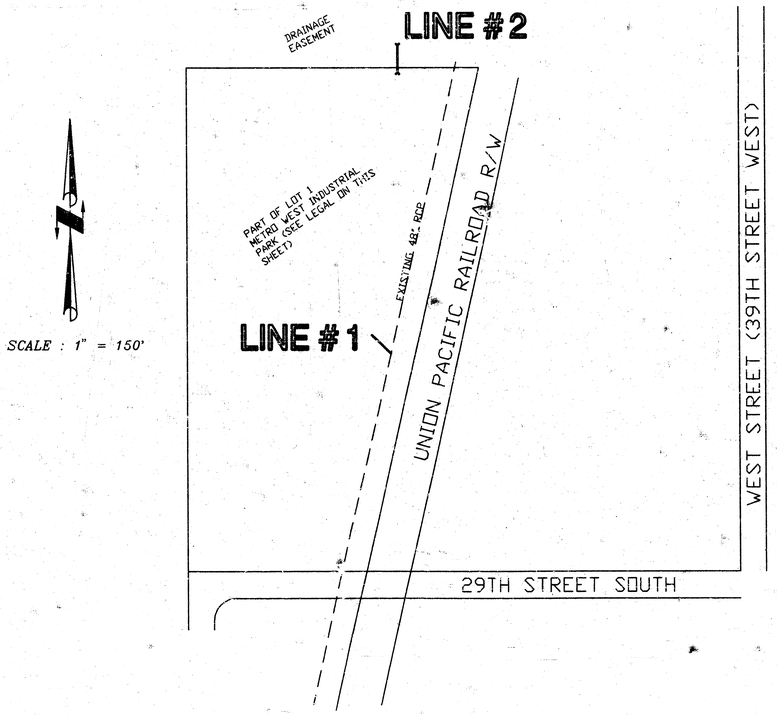

LOCATION MAP

LEGAL DESCRIPTION: THAT PART OF LOT 1, METRO WEST INDUSTRIAL PARK ADDITION TO WICHITA, KANSAS, BEGINNING AT THE SOUTHEAST CORNER OF SAID LOT 1; THENCE WEST 419.25 FEET; THENCE NORTH 1122.21 FEET; THENCE EAST 867.13 FEET TO EAST LINE OF SAID LOT 1; THENCE SOUTHWESTERLY 1220.22 FEET TO BEGINNING.

BENCH MARKS:

Project Control: City of Wichita Disk, 53' East and 44' South of Centerline of both 31st Street South and West Street. Elev. = 1013.47 (City of Wichita Datum)

Bench Mark No. 1: Square cut on Curb North side of 29th Street South and 50' east of the East Curb line of 29th Street South Circle. Elev. = 1013.55 (City of Wichita Datum)

Bench Mark No. 2: 'X' cut on top of North end of 48" RCP, 25' West and 56' North of Northeast Property Corner. Elev. = 1010.44 (City of Wichita Datum)

Bench Mark No. 3: Square cut on top of South Curb, East side of inlet, at West end of Southwest Return, 29th Street South and West Street. Elev. = 1012.82 (City of Wichita Datum)

NOTE:

City of Wichita Datum = USGS DATUM - 1187.40

GENERAL NOTES:

1. CONTRACTOR WILL BE REQUIRED TO PROVIDE A MINIMUM ADVANCE NOTICE OF TWENTY-FOUR (24) HOURS TO UTILITY COMPANIES PRIOR TO STARTING ANY EXCAVATION AS FOLLOWS:

KANSAS GAS & ELECTRIC	316-261-6421
K/G/E GAS SERVICE	316-383-8650
SOUTHWESTERN BELL TELEPHONE CO.	316-383-0454
WICHITA WATER DEPARTMENT	316-249-4555
MULTIMEDIA CABLEVISION	316-262-4270
WICHITA SEWER MAINTENANCE	316-268-4219
KANSAS ONE-CALL	1-687-2470

2. ALL WORK SHALL BE DONE IN ACCORDANCE WITH CITY OF WICHITA, KANSAS CITY OF WICHITA STANDARD SPECIFICATIONS.

3. EXISTING UTILITIES AND THEIR LOCATIONS, AS SHOWN ON THE PLANS, REPRESENT THE BEST INFORMATION OBTAINABLE FOR DESIGN. LOCATION INFORMATION HAS BEEN OBTAINED FROM THE VARIOUS UTILITY COMPANIES AND IS EITHER FORM COMPANY RECORD DRAWINGS OR COMPANY PROVIDED FIELD LOCATIONS. THE CONTRACTOR WILL BE REQUIRED TO WORK AROUND EXISTING UTILITIES WITHIN THE RIGHT-OF-WAY WHICH DO NOT CONFLICT WITH PROPOSED CONSTRUCTION.

4. RUBBLE FROM THE REMOVAL OF MISCELLANEOUS STRUCTURES AND EXCESS EXCAVATION WHICH IS TO BE WASTED SHALL BE DISPOSED OF ON SITES TO BE PROVIDED BY THE CONTRACTOR. THESE SITES SHALL BE APPROVED BY THE ENGINEER AS TO SUITABILITY, APPEARANCE AND SITE LOCATION. LOCATIONS THAT, IN THE OPINION OF THE ENGINEER, WILL LEAVE UNSIGHTLY APPEARANCE WILL NOT BE APPROVED.

5. THE CONTRACTOR SHALL RESPONSIBLE FOR PRESERVING PROPERTY IRONS. THE CONTRACTOR WILL BE REQUIRED TO RE-ESTABLISH ANY PROPERTY IRONS WHICH ARE DAMAGED OR DESTROYD BY HIS CONSTRUCTION OPERATIONS. SUCH IRONS SHALL BE RE-ESTABLISHED BY A LICENSED LAND SURVEYOR OR LICENSED PROFESSIONAL ENGINEER IN ACCORDANCE WITH STATE LAW.

6. GRASS AREAS DISTURBED BY CONSTRUCTION OR STORAGE OF MATERIALS SHALL BE REPLANTED EITHER BY SEEDING OR SODDING WITH THE SAME TYPE OF GRASS AS WAS EXISTING PRIOR TO STORM SEWER CONSTRUCTION. SEE 'SPECIAL PROVISIONS' IN THE STANDARD SPECIFICATION NO. 14533 FOR SEEDING AND SODDING OF COOL SEASON AND WARM SEASON GRASSES.

NOTE TO CONTRACTOR:

INSPECTION AND TESTING FOR THIS PROJECT IS TO BE PROVIDED BY A LICENSED CONSULTING ENGINEERING FIRM UNDER CONTRACT WITH THE OWNER/DEVELOPER. SAID INSPECTION TO BE IN ACCORDANCE WITH THE CITY OF WICHITA STANDARD ENGINEERING PRACTICES AND CERTIFIED BY A LICENSED PROFESSIONAL ENGINEER. NO WORK SHALL BE PERFORMED IN DEDICATED EASEMENTS OR PUBLIC RIGHT-OF-WAY BY THE CONTRACTOR WITHOUT SUCH INSPECTION NOR SHALL ANY WORK BE COMMENCED IN DEDICATED EASEMENTS OR PUBLIC RIGHT-OF-WAY WITHOUT WRITTEN AUTHORIZATION BY THE CITY ENGINEER.

APPROVED AS NOTED
BY CITY ENGINEER OF WICHITA:

SANITARY SEWER _____

STORM SEWER VRH 3/17/95

DRIVEWAY APPROACH _____

WATER MAINS _____

PAVING _____

BAGAR M. KHAN LICENSED 9320 3-15-95 KANSAS PROFESSIONAL ENGINEER

MICHAEL E. LINDEBAK, P.E., CITY ENGINEER

AS BUILT ; 10-25-95 ; B.K.

TITLE SHEET

SCALE:	APPROVED:	DRAWN BY: F.A.
DATE:		CHECKED: B.K.
PROJECT NO:		SHEET NO.: 1 OF 3

MUNICIPAL ENGINEERS
254-LAURA, SUITE 201
WICHITA, KANSAS 67211
316-262-3842

APR 13 1995

3c4

D:\ACAD12\DWG\MEYER\MEYTIT Wed Mar 15 07:33:30 1995 93-79

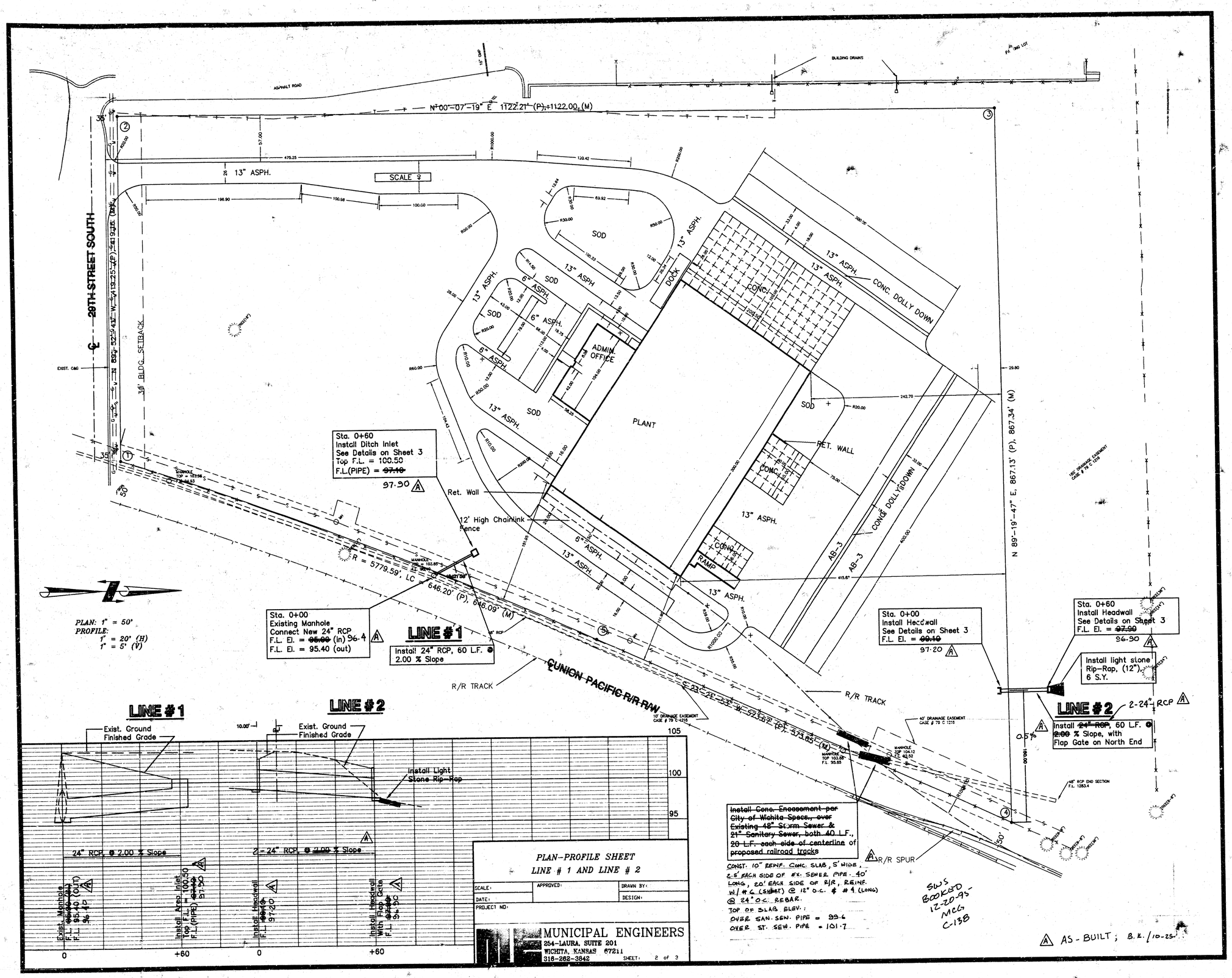

PLAN-PROFILE SHEET
LINE # 1 AND LINE # 2

SCALE:	APPROVED:	DRAWN BY:
DATE:		DESIGN:
PROJECT NO:		

MUNICIPAL ENGINEERS
254-LAURA, SUITE 201
WICHITA, KANSAS 67211
316-262-3842
SHEET: 2 of 3

GossenLivingston
Architecture
420 South Emporia
Wichita, KS 67202
Tel (316) 265-9367
Fax (316) 265-5646

Weyerhaeuser Company

WICHITA RECYCLING PLANT
WICHITA KANSAS

JOB NO.
DATE
DRAWN
CHECKED
OF

SCS 13 1995

D:\ACAD12\DWG\WEYER\WEYPP Wed Mar 15 07:37:15 1995 93-79

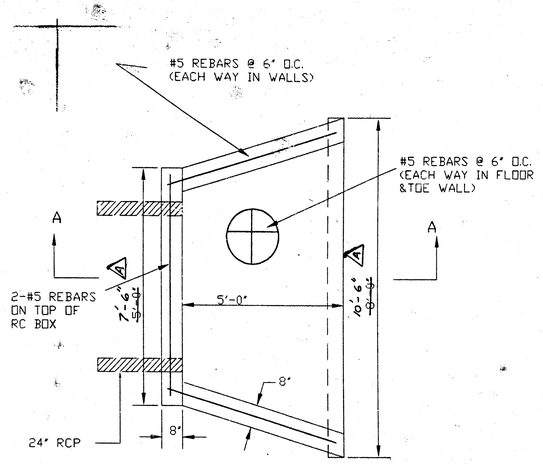

PLAN

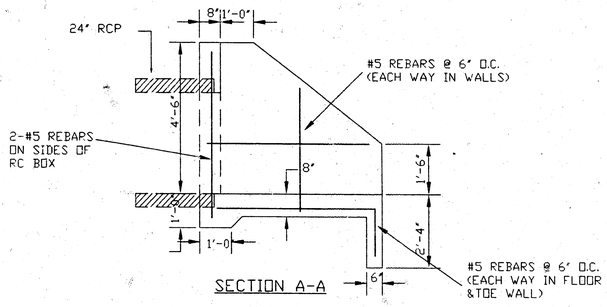

SECTION A-A

GENERAL NOTES

1. USE CONCRETE WITH 4,000 PSI COMPRESSIVE STRENGTH @ 28 DAYS.
2. USE 60 KSI REBARS.
3. USE NENNAH R-5050-SF24 OR EQUAL WHERE 24" FLAP GATE IS REQUIRED ON PLANS.

HEADWALL
NO SCALE

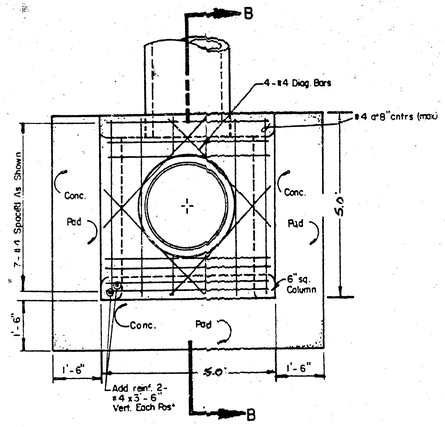

PLAN

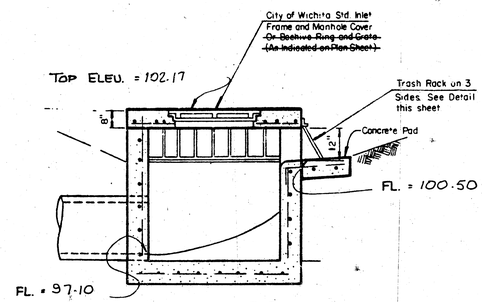

SECTION B-B

DITCH INLET TYPE I-A

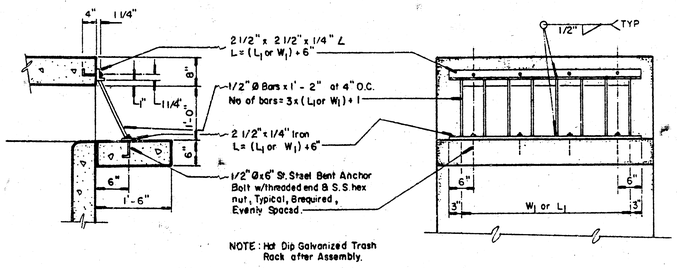

NOTE: Hot Dip Galvanized Trash Rack after Assembly.

TRASH RACK DETAIL
FOR USE WITH TYPE I-A DITCH INLET
(NO SCALE)

STORM SEWER IMPROVEMENTS TO SERVE PART OF LOT 1, METRO WEST INDUSTRIAL PARK ADDITION
PRIVATE PROJECT NO.: 536 PPS (607861)

A AS BUILT ; B.K., 10-25-95

MUNICIPAL ENGINEERS
254-LAURA, SUITE 201
WICHITA, KANSAS 67211
316-262-3842

GessonLivingston
Architecture
420 South Emporia
Wichita, KS 67202
Tel (316) 265-9387
Fax (316) 265-5646

Weyerhaeuser Company

WICHITA RECYCLING PLANT
WICHITA KANSAS

JOB NO.
DATE
DRAWN
CHECKED
APR 1 3 1995
3 OF 3

SC 6 APR : 3

D:\ACAD12\DWG\WEYERWEYDET Thu Feb 9 09:36:34 1995 93-79