SHEET NO.	TOTAL SHEETS
1	11

CITY OF WICHITA, KANSAS
MICHAEL E. LINDEBAK, P.E., CITY ENGINEER

STORM WATER SEWER NO. 463

IN

NORTHRIDGE LAKES
NORTHRIDGE LAKES 2ND ADDITION

CITY OF WICHITA PROJECT NO. 468-76-245-82496-000-000-001
INDEX NO. 750844

INDEX OF SHEETS

1. TITLE SHEET
2.-3. PLATS
4. PLAN & PROFILE-SWS LINE NO. 1
5. PLAN & PROFILE-SWS LINE NO. 1A
6. MISCELLANEOUS DRAINAGE DETAILS
7. STD. DETAILS REINFORCED CONCRETE MANHOLES
8. DETAILS STD. TYPE 1A CURB INLET
9. INLET TYPE C
10. MANHOLE FRAME AND COVER DETAIL
11. BORING LOGS

PROJECT SURVEY CONTROL
CITY OF WICHITA VERTICAL DATUM

C.O.W. BM: BRASS DISK 6' WEST OF SOUTHWEST CORNER NORTHRIDGE LAKES 2ND ADDITION. ELEV.=165.61

BM 1: TOP "T" POST 5' NORTH OF P.C. LOT 2, BLOCK 5, NORTHRIDGE LAKES ADDITION. ELEV.=174.94

BM 2: TOP "T" POST 5' EAST OF P.C. LOT 16, BLOCK 4, NORTHRIDGE LAKES ADDITION. ELEV.=173.76

BM 3: TOP "T" POST 5' WEST OF SOUTHEAST CORNER LOT 4, BLOCK 1, NORTHRIDGE LAKES ADDITION. ELEV.=167.48

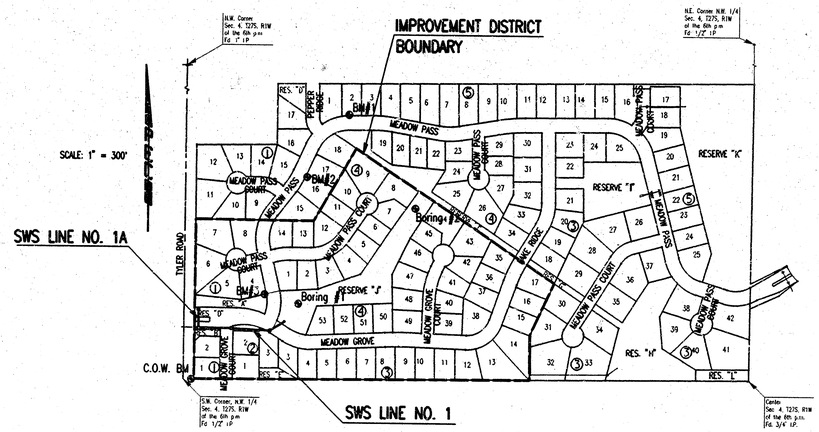

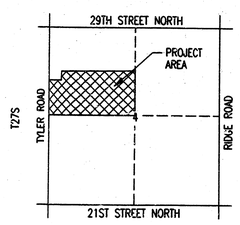

VICINITY MAP

GENERAL NOTES

UNDERGROUND UTILITY SERVICE LINES AND OVERHEAD UTILITY POLE LINES ARE TO BE ADJUSTED AS NECESSARY BY OTHERS PRIOR TO CONSTRUCTION UNLESS THE PLANS SPECIFICALLY CALL FOR THEIR ADJUSTMENT BY THE CONTRACTOR. EXISTING UTILITIES AND THEIR LOCATION, AS SHOWN ON THE PLANS, REPRESENT THE BEST INFORMATION OBTAINABLE FOR DESIGN. LOCATION INFORMATION HAS BEEN OBTAINED FROM THE VARIOUS UTILITY COMPANIES AND IS EITHER FROM COMPANY RECORD DRAWINGS OR COMPANY PROVIDED FIELD LOCATIONS. THE CONTRACTOR WILL BE REQUIRED TO WORK AROUND EXISTING UTILITIES WITHIN THE RIGHT-OF-WAY WHICH DO NOT CONFLICT WITH PROPOSED CONSTRUCTION.

TREES AND SHRUBS IN PUBLIC RIGHT-OF-WAY WHICH ARE IN DIRECT CONFLICT WITH PROPOSED NEW CONSTRUCTION SHALL BE REMOVED BY THE CONTRACTOR WITH THE ENGINEER'S APPROVAL. TREES AND SHRUBS WHICH ARE NOT IN DIRECT CONFLICT WITH PROPOSED NEW CONSTRUCTION SHALL BE SAVED AND PROTECTED FROM DAMAGE.

RUBBLE FROM THE REMOVAL OF MISCELLANEOUS STRUCTURES SHALL BE DISPOSED OF ON SITES TO BE PROVIDED BY THE CONTRACTOR AND APPROVED AS NOTED.

ALL DISPOSAL SITES MUST BE APPROVED BY THE KANSAS DEPARTMENT OF HEALTH AND ENVIRONMENT. MATERIAL EITHER STOCKPILED OR DISPOSED OF IN A FLOOD PLAIN WOULD REQUIRE A KANSAS STATE BOARD OF AGRICULTURE PERMIT. ANY MATERIAL DUMPED IN WATERS OF THE UNITED STATES OR WETLANDS IS SUBJECT TO U.S. CORPS OF ENGINEERS PERMITTING REGULATIONS. ANY MATERIAL BURIED OR STOCKPILED BEYOND APPROVED CONSTRUCTION LIMITS WOULD REQUIRE ADDITIONAL ARCHOLOGICAL INVESTIGATIONS UNLESS BURIED IN A PREVIOUSLY APPROVED BORROW LOCATION.

CONTRACTOR SHALL SATISFY HIMSELF OF SURFACE AND SUBSURFACE CONDITIONS PRIOR TO BIDDING.

EXCESS EXCAVATED MATERIAL AND EXCESS TOPSOIL SHALL BE STOCKPILED OR WASTED WITHIN THE PLAT LIMITS. EXACT STOCKPILE LOCATION SHALL BE AS DIRECTED BY THE DEVELOPER, MR. MARVIN SCHELLENBERG, 721-2153. WASTE MATERIAL SHALL BE GRADED SMOOTH AND SLOPED TO DRAIN. THIS WORK SHALL BE CONSIDERED SUBSIDIARY TO OTHER BID ITEMS.

CONTRACTOR SHALL PROVIDE A MINIMUM FORTY-EIGHT (48) HOUR ADVANCE NOTICE (EXCLUDING WEEKENDS AND HOLIDAYS) PRIOR TO BEGINNING ANY EXCAVATION, TO KANSAS ONE-CALL SYSTEM, A UTILITY LOCATION SERVICE, AT (316) 687-2470 TO REQUEST THE FOLLOWING UTILITY COMPANIES TO LOCATE ALL EXISTING LINES WITHIN THE PROJECT AREA: PEOPLES NATURAL GAS, K.G.E. ELECTRIC, SOUTHWESTERN BELL TELEPHONE, MULTIMEDIA CABLEVISION, CITY OF WICHITA SEWER MAINTENANCE AND CITY OF WICHITA WATER DEPARTMENT.

THE CONTRACTOR SHALL BE RESPONSIBLE FOR PRESERVING PROPERTY IRONS. THE CONTRACTOR WILL BE REQUIRED TO RE-ESTABLISH ANY PROPERTY IRONS WHICH ARE DAMAGED OR DESTROYED BY HIS CONSTRUCTION OPERATIONS. SUCH IRONS SHALL BE RE-ESTABLISHED BY A LICENSED LAND SURVEYOR IN ACCORDANCE WITH STATE LAWS.

THE WATER DEPARTMENT SHALL FIELD LOCATE WATER VALVES ONE TIME DURING CONSTRUCTION WHEN REQUESTED BY THE CONTRACTOR. IT SHALL BE THE CONTRACTOR'S RESPONSIBILITY TO PRESERVE SUCH FIELD LOCATIONS DURING THE CONSTRUCTION PROCESS. WATER VALVES, WATER VALVE BOXES OR FIRE HYDRANTS DAMAGED DURING CONSTRUCTION SHALL BE REPAIRED BY THE CONTRACTOR AT HIS OWN EXPENSE.

THE CONTRACTOR SHALL ADJUST WATER VALVE BOXES AS DIRECTED BY THE ENGINEER. THIS WORK TO BE SUBSIDIARY TO OTHER BID ITEMS.

THE CONTRACTOR SHALL SEED AND MULCH ALL UNPAVED AREAS DISTURBED BY CONSTRUCTION ACCORDING TO THE STANDARD SPECIFICATIONS. SEED SHALL BE ANNUAL RYE APPLIED AT THE RATE OF 4 LBS./1000 S.F. MULCH SHALL BE HAY APPLIED AT THE RATE OF 90 LBS./1000 S.F. THIS WORK SHALL BE PAID FOR AT LUMP SUM PRICE BID FOR "TEMPORARY PROJECT SEEDING".

BRENT E. REMSBERG — 8198 — 8/6/96 — KANSAS — PROFESSIONAL ENGINEER

AUGUST 1996

PLANS PREPARED BY
PROFESSIONAL ENGINEERING CONSULTANTS, P.A.
ENGINEERS
WICHITA, KANSAS

usr/ashj/dgn: k:1996/96049/003/Smtitle.dgn
date plotted: 8-6-96
deliver to: Dwaine Dunn

NORTHRIDGE LAKES

AN ADDITION TO WICHITA, SEDGWICK COUNTY, KANSAS

PROJECT NO.	SHEET NO.	TOTAL SHEETS
468-76-245-8249-000-000-001	2	//

SCALE: 1=100'

○ = IRON SET

BSL = BUILDING SETBACK LINE
CAC = COMPLETE ACCESS CONTROL

B.M. – CITY OF WICHITA BENCH MARK DISC, 38 FEET WEST AND 90 FEET SOUTH OF THE INTERSECTION OF THE CENTERLINES OF TYLER ROAD AND 21ST STREET NORTH.
ELEV. 1357.349 M.S.L. = 169.949 CITY DATUM

B.M. – RAILROAD SPIKE IN SOUTHWEST SIDE OF POWER POLE LOCATED 75' NORTH AND 58' EAST OF THE INTERSECTION OF THE CENTERLINES OF RIDGE ROAD AND 21ST STREET NORTH.
ELEV. 1330.70 M.S.L. = 143.30 CITY DATUM

MINIMUM PAD ELEVATION (LOWEST OPENING) AS FOLLOWS:

BLOCK 3

LOTS 20 THROUGH 27	ELEV. = 1349.5 M.S.L. = 162.1 CITY DATUM
LOTS 33, 34, 39, AND 40	ELEV. = 1350.5 M.S.L. = 163.1 CITY DATUM
LOTS 35 THROUGH 38	ELEV. = 1344.6 M.S.L. = 157.2 CITY DATUM

BLOCK 4

LOTS 1 THROUGH 9	ELEV. = 1357.0 M.S.L. = 169.6 CITY DATUM
LOTS 19 THROUGH 25	ELEV. = 1357.0 M.S.L. = 169.6 CITY DATUM
LOTS 44 THROUGH 48	ELEV. = 1357.0 M.S.L. = 169.6 CITY DATUM
LOTS 50 THROUGH 53	ELEV. = 1357.0 M.S.L. = 169.6 CITY DATUM

BLOCK 5

LOTS 17 THROUGH 25	ELEV. = 1338.4 M.S.L. = 151.0 CITY DATUM

N.W. Corner Reserve "I"
Reflection Ridge 7th Addition

Most Northerly Point
Lot 1, Block 5, Reflection
Ridge 7th Addition

Most Easterly Point
Lot 1, Block 5, Reflection
Ridge 7th Addition

Most Southerly Corner
Lot 1, Block 5, Reflection
Ridge 7th Addition

REPLATTED AS NORTHRIDGE LAKES 2ND ADDITION

STORM WATER SEWER NO. 463

PLAT

PROFESSIONAL ENGINEERING CONSULTANTS, P.A.
ENGINEERS
WICHITA, KANSAS

Designed by		Checked by	
Drawn by	DEP, BJS	Date APRIL 1996	Job No. 96049-3

usr/ustn/dgn.l/1996/96049/003/northridgedgn
date plotted: april 23, 1996
deliver to: dwaine dunn

PROJECT NO.	SHEET NO.	TOTAL SHEETS
468-76-245-82496-000-008-001	3	11

NORTHRIDGE LAKES 2ND ADDITION

TO WICHITA, SEDGWICK COUNTY, KANSAS

SCALE: 1"=40'

○ = IRON SET
● = IRON FOUND

C.A.C. = COMPLETE ACCESS CONTROL

B.M. – CITY OF WICHITA BENCH MARK DISC, 38 FEET WEST AND 90 FEET SOUTH OF THE INTERSECTION OF THE CENTERLINES OF TYLER ROAD AND 21ST STREET NORTH.
ELEV.=169.949 CITY DATUM
ELEV.=1357.349 M.S.L.

B.M. – RAILROAD SPIKE IN SOUTHWEST SIDE OF POWER POLE LOCATED 75' 75' NORTH AND 53' EAST OF THE INTERSECTION OF THE CENTERLINES OF RIDGE ROAD AND 21ST STREET NORTH.
ELEV.=143.30 CITY DATUM
ELEV.=1330.70 M.S.L.

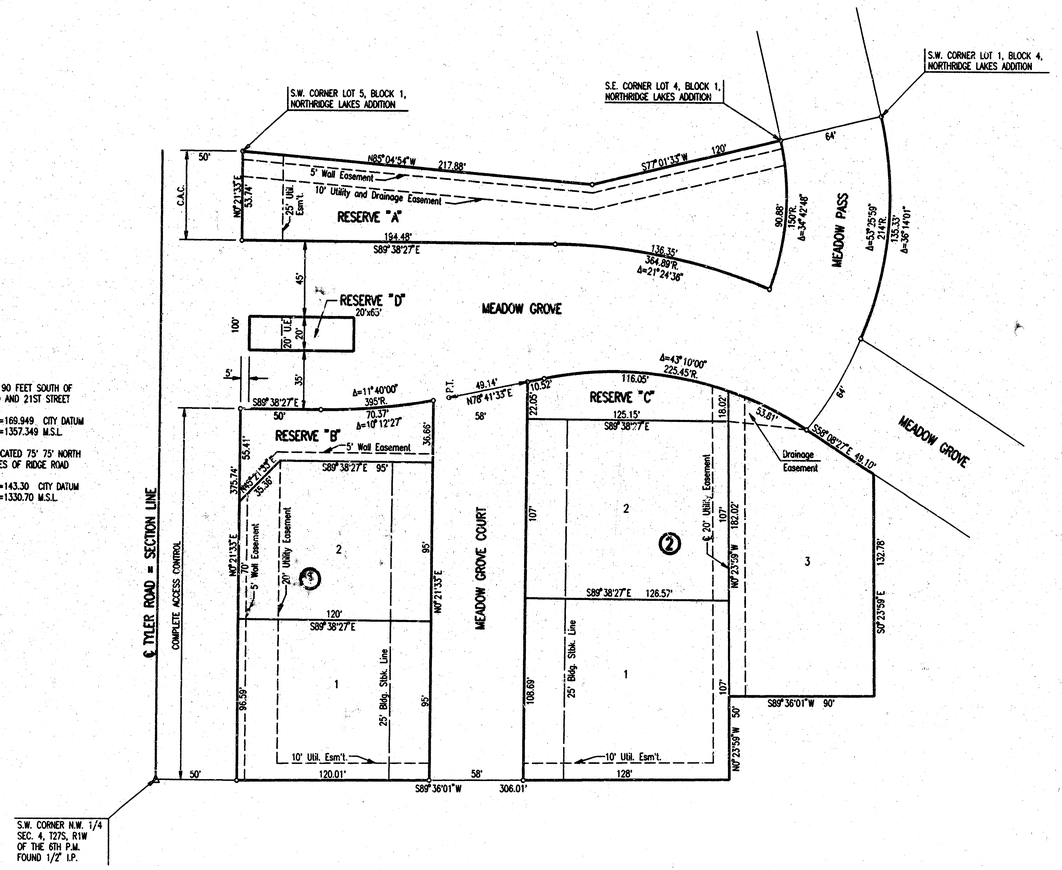

STORM WATER SEWER NO. 463

PLAT

PROFESSIONAL ENGINEERING CONSULTANTS, P.A.
ENGINEERS
WICHITA, KANSAS

Designed by		Checked by	
Drawn by	DEP, BJS	Date APRIL 1996	Job No. 96049-3

I:/1996/96049/003/northridge2.dgn
date plotted: 8-6-6
deliver to: Dwaine Dunn

1:/1996/96049/003/sws463.dgn
date plotted: 8-6-96
deliver to: Dwaine Dunn

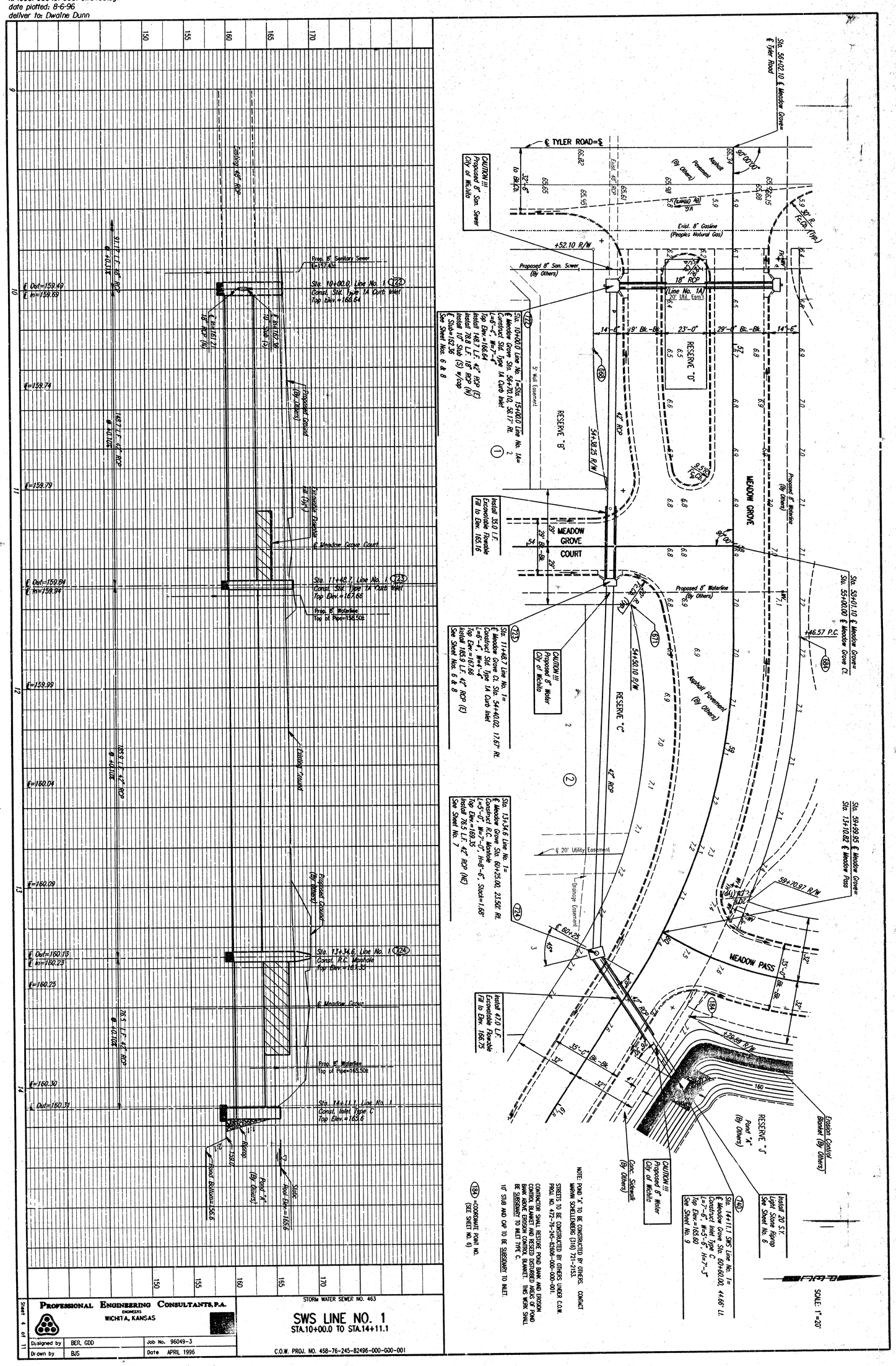

PROFESSIONAL ENGINEERING CONSULTANTS, P.A.
ENGINEERS
WICHITA, KANSAS

Designed by	BER, GDD	Job No.	96049-3
Drawn by	BJS	Date	APRIL 1996

STORM WATER SEWER NO. 463

SWS LINE NO. 1

STA.10+00.0 TO STA.14+11.1

C.O.W. PROJ. NO. 458-76-245-82496-000-000-001

Sheet 4 of 11

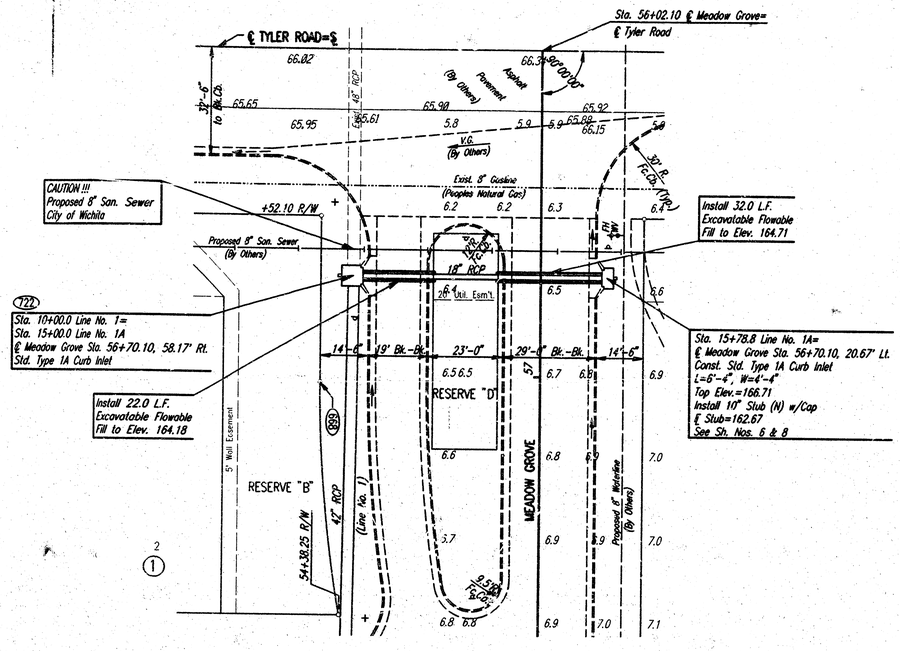

SCALE: 1" = 20'

NOTE: MEADOW GROVE STREET TO BE CONSTRUCTED BY OTHERS UNDER C.O.W. PROJ. NO. 472-76-245-82606-000-000-001.

10" STUB AND CAP TO BE SUBSIDIARY TO INLET.

(184) = COORDINATE POINT NO. (SEE SHEET NO. 6)

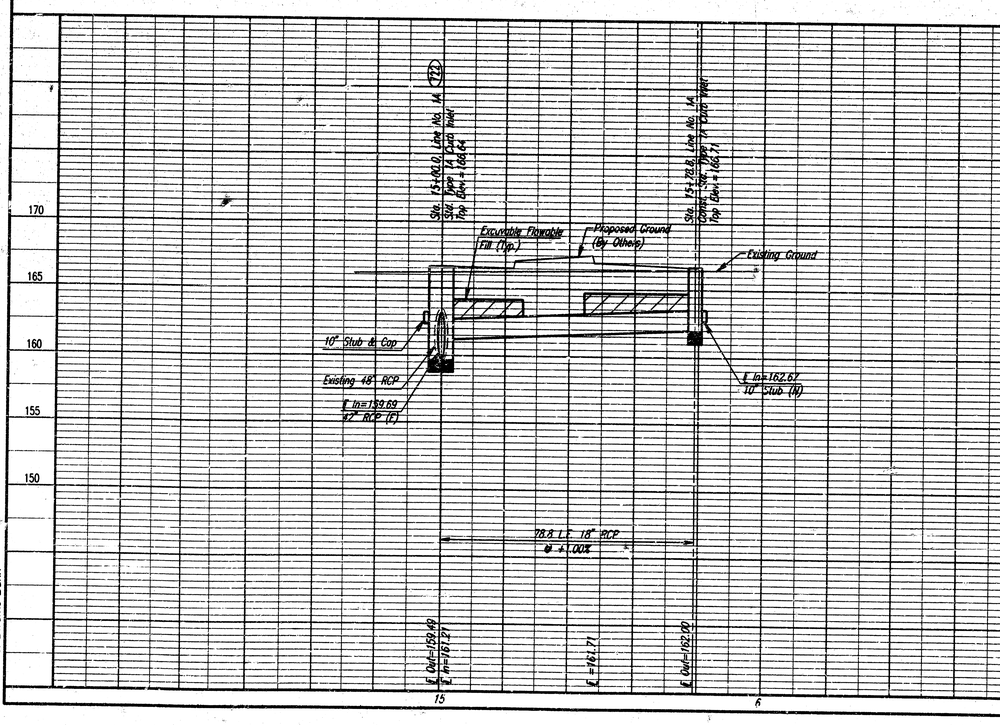

STORM WATER SEWER NO. 463

SWS LINE NO. 1A
STA.15+00.0 TO STA.15+78.8

C.O.W. PROJ. NO. 468-76-245-82498-000-001

PROFESSIONAL ENGINEERING CONSULTANTS, P.A.
DICKERS
WICHITA, KANSAS

Designed by	BER, GDD
Drawn by	MAF
Job No.	96049-3
Date	AUGUST 1996

Sheet 5 of 11

I:\1996\96049\003\swr463.dgn
data plotted: 8-5-96
deliver to Dwaine Dunn

PROJECT NO.	SHEET NO.	TOTAL SHEETS
468-76-245-82496-000-000-001	6	11

COORDINATE LIST		
POINT	NORTH	EAST
184	3854.6590	4163.3244
668	3820.5314	3827.9704
671	3837.8991	3956.0818
664	3909.6239	3973.0085
722	3820.5620	3795.9700
723	3817.8242	3944.6257
724	3909.7469	4130.3909
740	3849.3594	4195.8363

(184) =COORDINATE POINT NO.

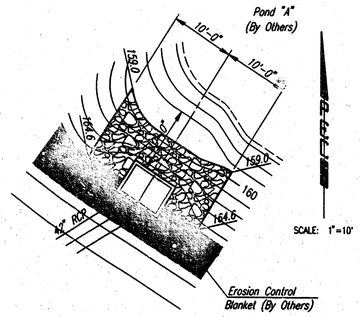

RIPRAP DETAIL

Sta. 14+11.1
SWS Line No. 1

NOTE

ALL RIPRAP FOR THIS PROJECT SHALL BE NATURAL STONE. NEITHER BROKEN CONCRETE, FABRIC ENVELOPE, NOR PREMIXED DRY PACKAGED CONCRETE BAG ALTERNATES WILL BE ALLOWED.

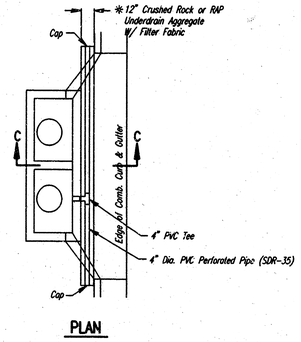

PLAN

* UNDERDRAIN AGGREGATE
PERCENT OF AGGREGATE RETAINED

1"	0
3/4 "	0-10
3/8 "	45-80
#4	90-100
#8	95-100

ROCK QUALITY SHALL CONFORM TO THE REQUIREMENTS SPECIFIED BY THE KDOT 1990 EDITION STANDARD SPECIFICATION SUBSECTION 1102 FOR DURABILITY CLASS 1.

PAVEMENT UNDERDRAIN LOCATIONS		
STREET	STATION	SIDE
MEADOW GROVE CT.	54+40.02	RT.

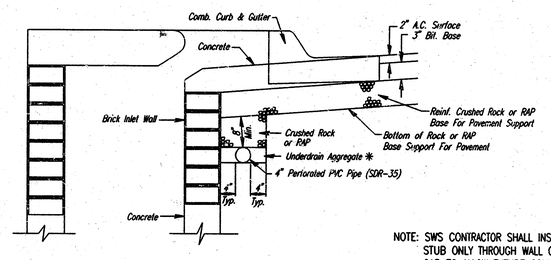

(Min. 16 Perforations Per Lin. Ft. @ 1/4" Dia.)
Perforations To Be on Bottom Half

NOTE: SWS CONTRACTOR SHALL INSTALL SDR 35, 4" DRAIN PIPE STUB ONLY THROUGH WALL OF THIS CURB INLET AND CAP TO ALLOW FUTURE CONNECTION OF TEE AND ADDITIONAL DRAIN PIPE BY OTHERS.

SECTION C-C

PAVEMENT UNDERDRAIN DETAIL

NOTE: PLACE 4" PVC PERFORATED PIPE AT ALL DRAINAGE SUMP LOCATION

COST OF UNDERDRAIN STUB TO BE INCIDENTAL TO THE INLET

INLET TYPE MAY VARY FROM THAT SHOWN.

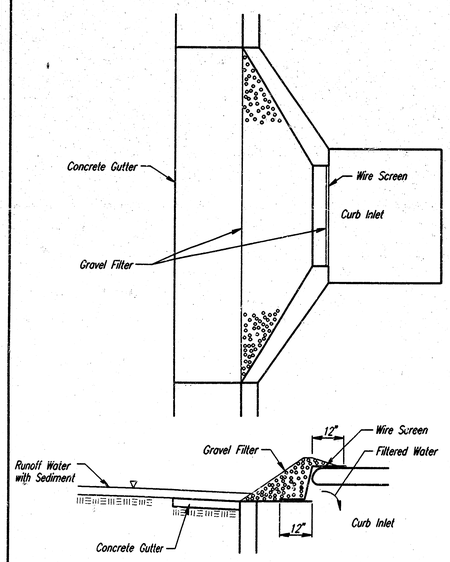

CURB INLET PROTECTION
GRAVEL AND WIRE MESH FILTER

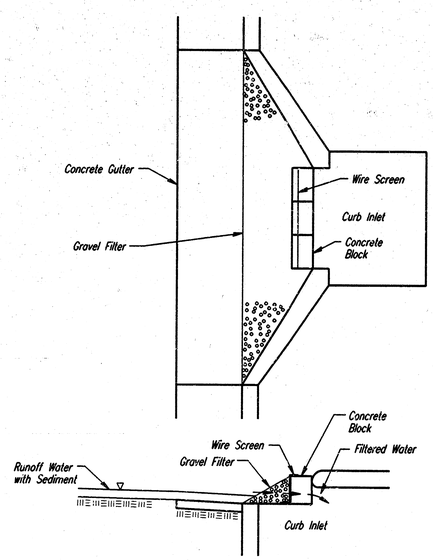

CURB INLET PROTECTION
BLOCK AND GRAVEL FILTER

GENERAL NOTES
INLET PROTECTION

1. INLET PROTECTION METHOD MAY BE ANY OF THE APPLICABLE TYPES SHOWN, AT THE CONTRACTORS OPTION.
2. GRAVEL FILTER SHALL BE A DURABLE, WELL-GRADED SAND-GRAVEL OR CRUSHED STONE, MAXIMUM 1-1/2 IN. SIZE. AS AN ALTERNATE GRAVEL FILLED BAGS OF BURLAP OR OTHER FABRIC MAY BE USED. WHERE BAGS ARE USED, THE WIRE SCREEN, WHERE SHOWN, MAY BE OMITTED.
3. INLET PROTECTION SHALL BE ERECTED AS SOON AS THE STRUCTURE HAS BEEN BACKFILLED. MEASURES SHALL BE TAKEN TO PRECLUDE ENTRY OF SEDIMENT INTO THE STORM WATER SEWER SYSTEM DURING CONSTRUCTION OF THE STRUCTURE.
4. REMOVAL AND DISPOSAL OF ACCUMULATED SILT AND DEBRIS AND/OR REMOVAL AND RECONSTRUCTION OF INLET PROTECTION INSTALLATIONS SHALL BE PERFORMED THROUGHOUT THE PROJECT LIFE WHENEVER DEBRIS REACHES ONE-THIRD THE BARRIER HEIGHT, OR AS DEEMED NECESSARY BY THE ENGINEER. ULTIMATE REMOVAL AND DISPOSAL OF INLET PROTECTION AND DEBRIS WILL BE PERFORMED BY THE DEVELOPER.
5. MEASUREMENT AND PAYMENT: THE ITEM "INLET PROTECTION" SHALL BE MEASURED AND PAID FOR AT THE CONTRACT UNIT PRICE BID PER EACH FOR EACH INLET LOCATION PROTECTED REGARDLESS OF METHOD SELECTED BY THE CONTRACTOR. SAID PRICE SHALL BE CONSIDERED FULL COMPENSATION FOR EXCAVATION, COMPACTION, BACKFILL, SEDIMENT, AND DEBRIS REMOVAL AND DISPOSAL, AND ALL LABOR, MATERIALS, TOOLS, AND INCIDENTALS NECESSARY TO COMPLETE THE WORK. RECONSTRUCTION OF INLET PROTECTION INSTALLATION DUE TO DAMAGE BY WIND, FLOOD, FIRE, ETC. OR DUE TO ACTIONS BY THE CONTRACTOR OR OTHERS SHALL BE PERFORMED BY THE CONTRACTOR AS DIRECTED BY THE ENGINEER AT NO ADDITIONAL COST.

PLAN	BY	DATE
NOTE BOOK NO.	SURVEYED	
	PLOTTED	
	ALIGNMENT CHECKED	
	RT. OF WAY CHECKED	

STORM WATER SEWER NO. 463

MISCELLANEOUS DRAINAGE DETAILS

PROFESSIONAL ENGINEERING CONSULTANTS, P.A.
ENGINEER
WICHITA, KANSAS

Designed by	BER, GDD	Checked by	
Drawn by	BJS	Date APRIL 1996	Job No. 96049-3

6

I:/1996/96049/003/miscdtlsgn
date plotted: 8-6-96
deliver to: Dwaine Dunn

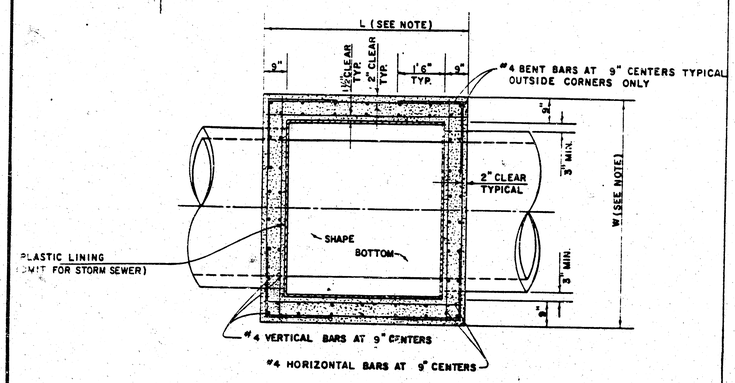

TOP VIEW

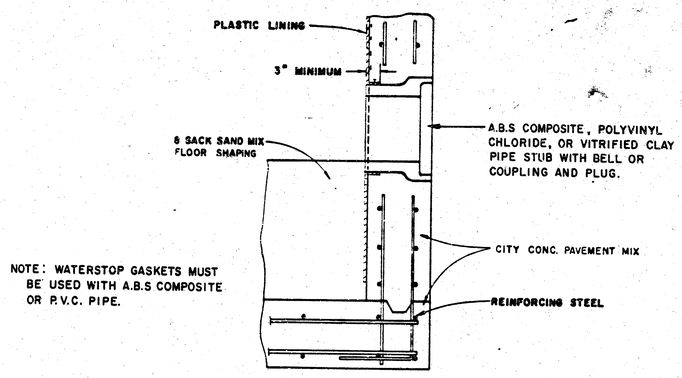

NOTE: WATERSTOP GASKETS MUST BE USED WITH A.B.S COMPOSITE OR P.V.C. PIPE.

PIPE STUB DETAIL
SANITARY SEWER ONLY

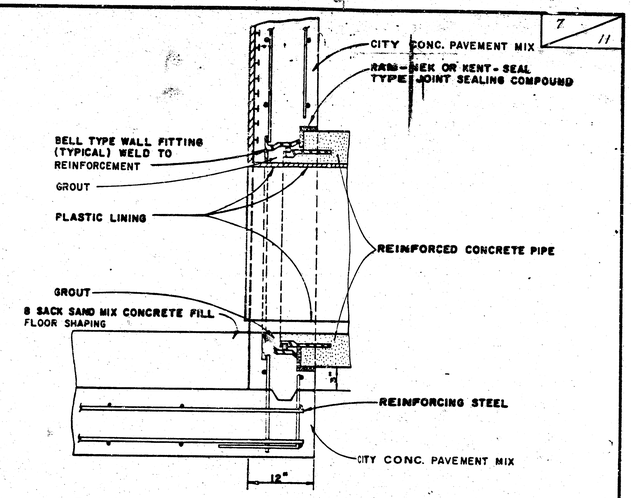

R.C.P. CONNECTION DETAIL
SANITARY SEWER ONLY

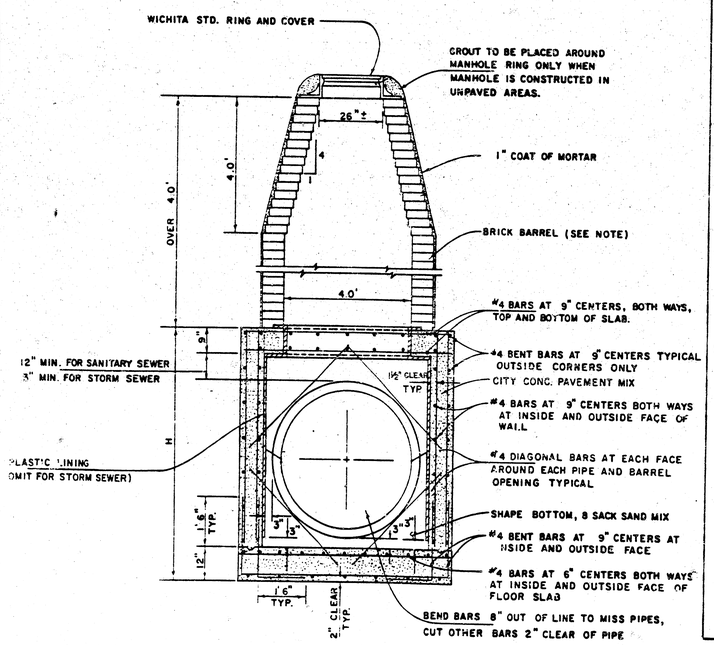

REINFORCED CONCRETE MANHOLE
DEPTH OF STACK: OVER 4.0'
SCALE 1" = 2'

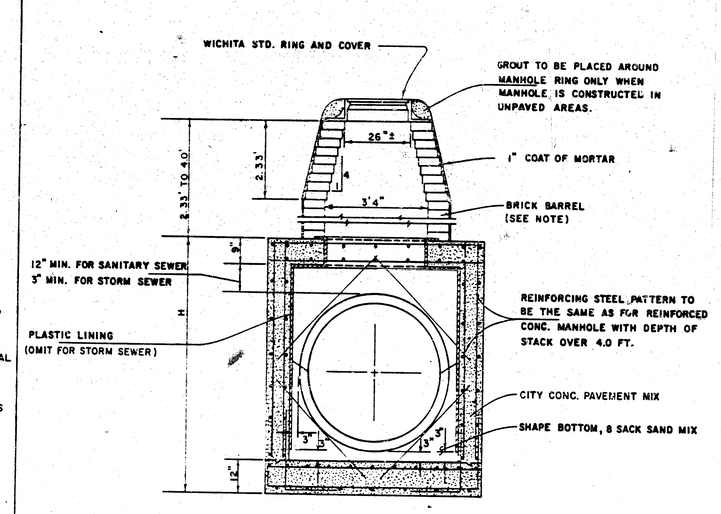

REINFORCED CONCRETE MANHOLE
DEPTH OF STACK: 2.33' TO 4.0'
SCALE 1" = 2'

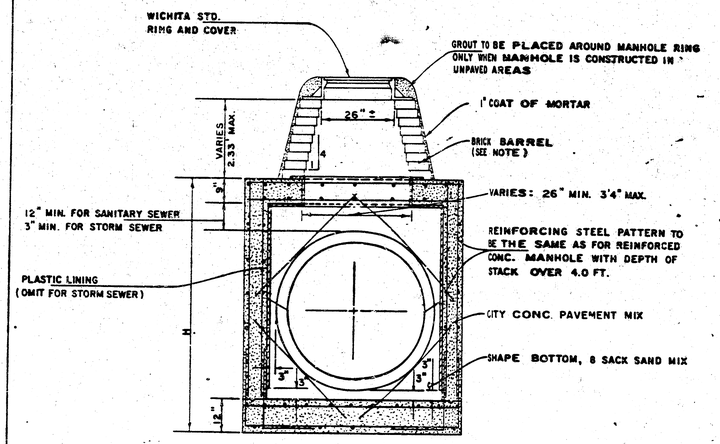

REINFORCED CONCRETE MANHOLE
DEPTH OF STACK: 0' TO 2.33'
SCALE 1" = 2'

NOTE:
BRICK BARRELS LESS THEN 16' DEEP SHALL HAVE 8" WALLS EXCEPT WHEN LOCATED WITHIN PUBLIC STREET OR ALLEY PAVEMENT THEN THE WALL SHALL BE 12". BRICK BARRELS MORE THEN 16' DEEP SHALL HAVE 12" WALLS. THE "L" AND "W" DIMENSIONS SHALL BE A MINIMUM OF 5'6" FOR BRICK BARRELS WITH 8" WALLS AND 6'2" FOR BRICK BARRELS WITH 12" WALLS WHEN THE BRICK BARRELS ARE OVER 4 FT. IN HEIGHT. COMLETED MANHOLE SHALL BE WITHOUT LEAKS AND WATERTIGHT.

REVISIED 1-7-85

STANDARD DETAILS
REINFORCED CONCRETE MANHOLES
CITY OF WICHITA

FEBRUARY 1984

Proj. No. 468 76 245 82496 000 000 001

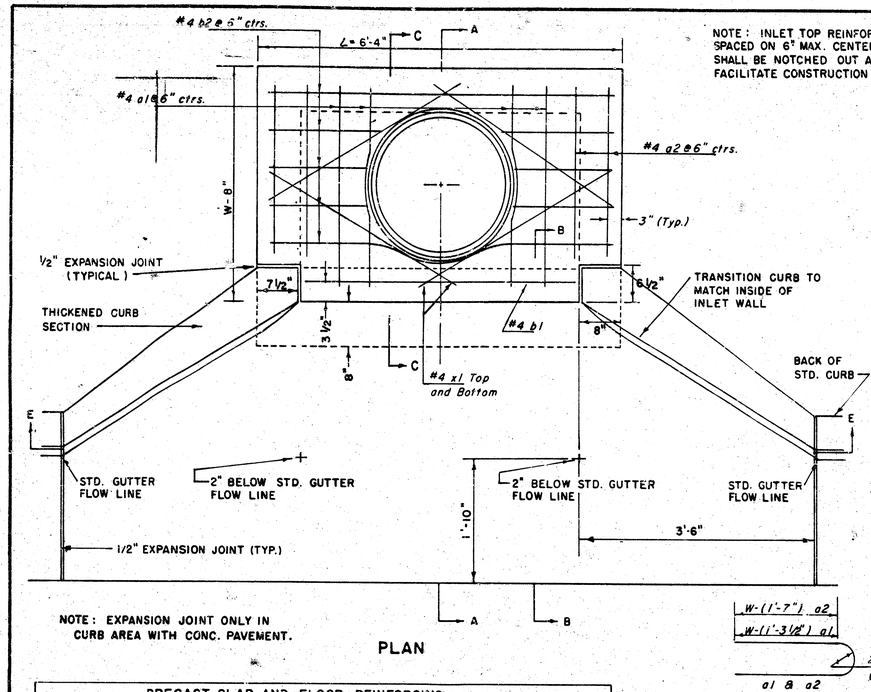

NOTE: EXPANSION JOINT ONLY IN CURB AREA WITH CONC. PAVEMENT.

PLAN

NOTE: INLET TOP REINFORCING SHALL BE SPACED ON 6" MAX. CENTERS. INLET LIDS SHALL BE NOTCHED OUT AS INDICATED TO FACILITATE CONSTRUCTION OF CURB.

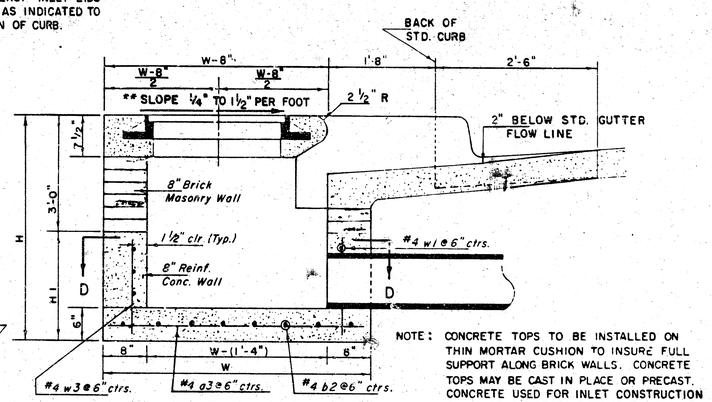

SECTION A-A

NOTE: CONCRETE TOPS TO BE INSTALLED ON THIN MORTAR CUSHION TO INSURE FULL SUPPORT ALONG BRICK WALLS. CONCRETE TOPS MAY BE CAST IN PLACE OR PRECAST. CONCRETE USED FOR INLET CONSTRUCTION SHALL BE CONCRETE PAVEMENT MIX WITH AIR ENTRAINMENT.

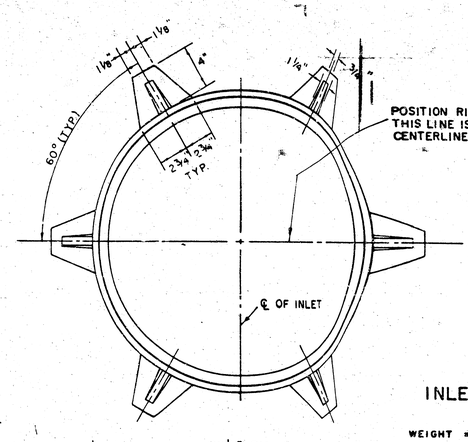

INLET FRAME

WEIGHT = 180 LBS.

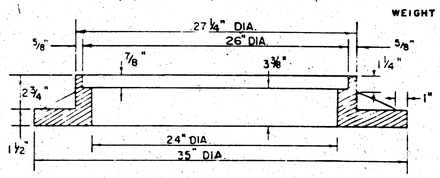

SEE CITY OF WICHITA STANDARD MANHOLE FRAME AND COVER DETAIL SHEET FOR COVER DETAILS TO BE USED WITH INLET FRAME.

PRECAST SLAB AND FLOOR REINFORCING											
		W=4'-4"		W=5'-4"		W=6'-4"		W=7'-4"		W=8'-4"	
Mark	Size	No.	Length	No.	Length	No.	Length	No.	Length	No.	Length
a1	#4	6	6'-7"	6	8'-7"	6	10'-7"	6	12'-7"	6	14'-7"
a2	#4	4	6'-0"	4	8'-0"	4	10'-0"	4	12'-0"	4	14'-0"
a3	#4	13	4'-1"	13	5'-1"	13	6'-1"	13	7'-1"	13	8'-1"
b1	#4	1	4'-9"	1	4'-9"	1	4'-9"	1	4'-9"	1	4'-9"
*b2	#4	23	6'-1"	29	6'-1"	35	6'-1"	41	6'-1"	47	6'-1"
x1	#4	8	3'-10"	8	4'-2"	8	4'-6"	8	4'-10"	8	5'-2"
WALL REINFORCING											
		W=4'-4"		W=5'-4"		W=6'-4"		W=7'-4"		W=8'-4"	
Mark	Size	No.	Length	No.	Length	No.	Length	No.	Length	No.	Length
w1	#4	①	6'-1"	①	6'-1"	①	6'-1"	①	6'-1"	①	6'-1"
w2	#4	①	4'-1"	①	5'-1"	①	6'-1"	①	7'-1"	①	8'-1"
w3	#4	32	②	36	②	40	②	44	②	48	②

* Bend or cut Reinforcing as required for clearance.

① 4(H1-12"); (H1-12") Round down to nearest 0.5'

② H1-3"

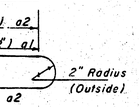

BENDING DIAGRAM

STANDARD CURB INLET PRECAST TOPS			
W	PRE-CAST TOP SIZE	PIPE SIZE	CU. YD. CONC.
4' 4"	3'8"x 6'4" x7 1/2"	21" & SMALLER	0.38 ±
5' 4"	4'8"x 6'4" x7 1/2"	24" & 30"	0.51 ±
6' 4"	5'8"x 6'4" x7 1/2"	36" & 42"	0.64 ±
7' 4"	6'8"x 6'4" x7 1/2"	48" & 54"	0.77 ±
8' 4"	7'8"x 6'4" x7 1/2"	60" & 66"	0.90 ±

NOTE: CONTRACTOR SHALL HAVE THE OPTION OF CONSTRUCTING 8" BRICK MASONRY WALLS BETWEEN THE CONCRETE INLET BASE AND TOP ON THIS INLET WHEN W = 6'4" AND H = 7'0" OR LESS.

ADDITIONAL CURB AND GUTTER CONSTRUCTION NECESSARY TO CONNECT SET-BACK INLET TO PAVEMENT WILL BE PAID FOR AT THE UNIT PRICE BID FOR EACH INLET HOOKUP.

INLET INVERT SHALL BE SHAPED WITH 8 SACK SAND MIX CONCRETE TO CREATE FLOW CHANNELS AND TO INCREASE HYDRAULIC FFFICIENCY SUCH THAT THE INLET WILL BE SELF CLEANING BETWEEN ALL INLET AND/OR OUTLET PIPES.

THE ENDS OF ALL PIPES INSTALLED IN INLETS SHALL BE CUT OFF FLUSH WITH THE INSIDE FACE OF THE INLET WALL.

** NOTE: Slope of Inlet Tops to match Sidewalk or Parking Slopes within Limits indicated.

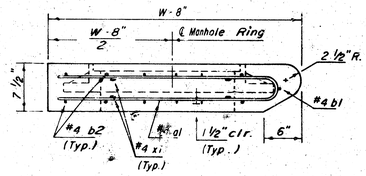

SECTION C-C

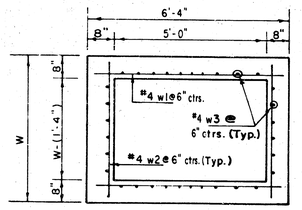

SECTION D-D

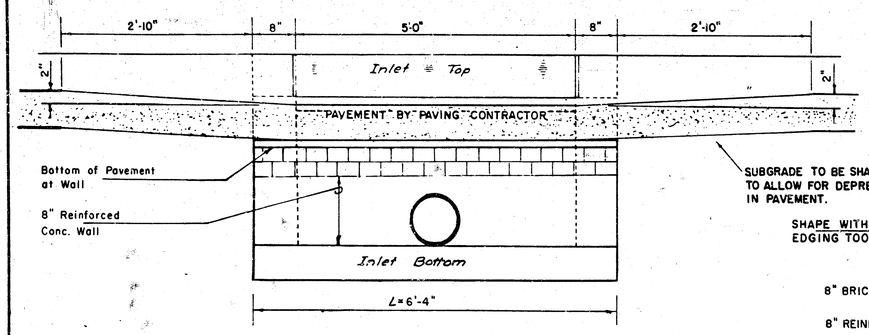

SECTION E - E

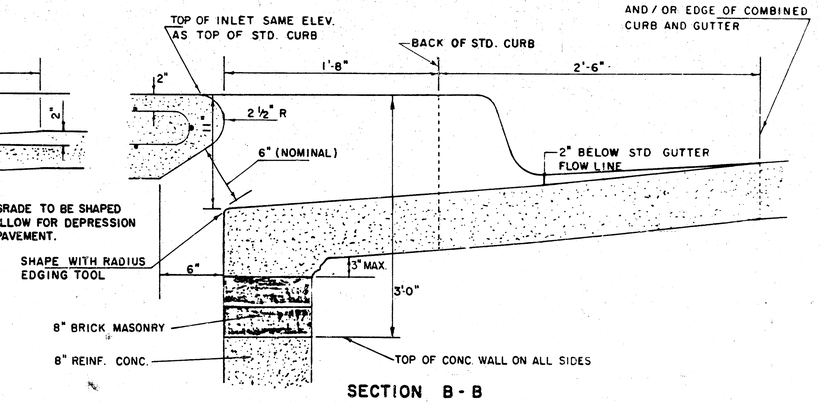

SECTION B - B

~~REVISED 11-30-1988~~

~~REVISED 12-21-1984~~ Revised 2-16-1989

DETAIL STANDARD TYPE IA CURB INLET

CITY OF WICHITA, KANSAS

INLET OPENING = 6" × 5'0"

L=6'4"

JUNE 1984

Proj. No. 468 76 245 82496 000 000 001

8

PROJECT NO.	SHEET NO.	TOTAL SHEETS
468-76-245-82496-000-000-001	9	11

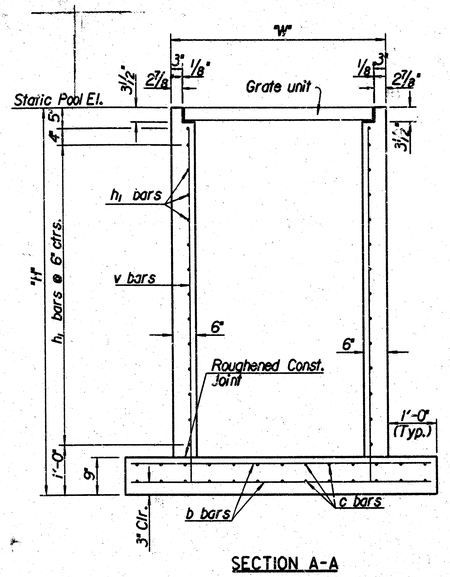

SECTION A-A

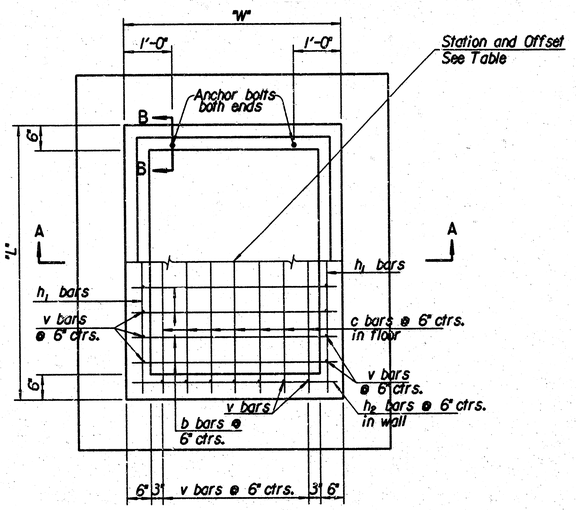

PLAN SECTION

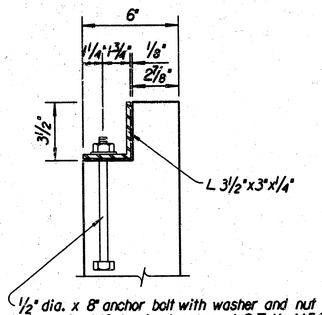

SECTION B-B

Note: Anchor bolts are subsidiary to the bid item "Inlet Type C".

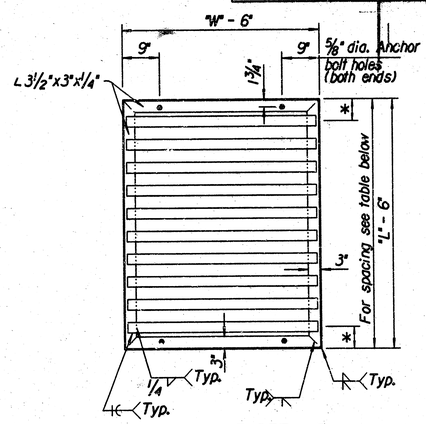

GRATE UNIT DETAILS

PIPE DIMENSIONS AND SPACING				
Location	L x W	No. of Pipes	Dia. x Length x Spacing	*
	7'-6"x5'-6"	7	2½ø x 4'-10½" Pipes @ 12" ctrs.	6"

AREA INLET

See Plan Sheet for Inlet orientation.

BILL OF MATERIALS INLET TYPE C			
"L" 7'-6" x "W" 5'-6" x "H" 7'-3"			
Bar	No.	Size	Length
v	44	#4	6'-9"
c	30	#4	9'-0"
b	38	#4	7'-0"
h_1	26	#4	7'-3"
h_2	26	#4	5'-3"
Class "A" Conc.		4.87	Cu.Yd.
Reinf. steel		766	Lbs.
Struct. steel		327	Lbs.

Quantities for inlets are for information only.

INLET TABLE	
Item	
S.W.S. Line No.	1
Station	14+11.10
Static Pool Elev.	165.60
Outlet R.C.P. I.E. Elev.	160.31
Pipe Size	42" ø R.C.P.

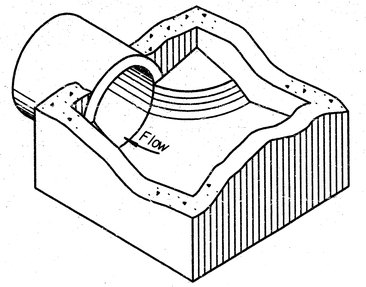

Floor of inlet or manhole shall be shaped as shown to increase hydraulic efficiency.

ISOMETRIC VIEW

GENERAL NOTES

Concrete shall be as per City of Wichita Standard Specifications for Concrete Paving Mix. Except that it shall have a minimum 28 day compressive strength of 4,000 p.s.i. All Pipes shall be flush cut prior to being cast into the inlet.

All dimensions relative to Reinforcing Steel are to centerline of bar unless otherwise noted. All Reinforcing Steel shall conform to A.S.T.M. Designation A615 Grade 60 and shall be Epoxy Coated.

All exposed edges shall be finished with an edging tool.

All external pipe to inlet joints shall be coated with an asphaltic tar to waterproof the joint interface.

In general, pipes will enter and leave the manhole at various positions. Where possible bend bars around pipes.

Floor of inlet shall be shaped as shown. Concrete used for shaping shall be unreinforced concrete pavement mix. No addition in concrete quantities shall be made for shaping floor of inlets.

No deductions in concrete quantities shall be made for pipe openings.

All bars are #4 @ 6" spacing and shall have a minimum clearance of 1½" unless otherwise noted on the plans.

The top of the manhole shall be set level.

The grate shall be fabricated from standard or commercial grade structural steel and black steel pipe. The unit shall be hot dipped, galvanized after fabrication, in accordance with ASTM A123 except the weight of coating shall average not less than 2.0 ounces per square foot of actual surface and no individual test shall show less than 1.8 ounces of coating per square foot of actual surface area.

Note: Inlets modified from KDOT Std. No. 648

No.	Revisions	By	Date
1			

NORTHRIDGE LAKES
PHASE 2

STORM WATER SEWER NO. 463

INLET TYPE C

COW PROJ. NO. 468-76-245-82496-000-000-001

PROFESSIONAL ENGINEERING CONSULTANTS, P.A.
ENGINEERS
WICHITA, KANSAS

Designed by	RWA	Checked by	RAS
Drawn by	WLL	Date April 1996	Job No. 96049-3

i:/1996/96049/003/areainlt.dgn
Drawn By: KDOT/RAS
Plotted By: mof 8-6-96, Deliver to: D. Dunn

MANHOLE FRAME AND COVER DETAIL

ADOPTED AS STANDARD DESIGN BY
CITY OF WICHITA, KANSAS

MANHOLE COVER
Weight = 180 Lbs.

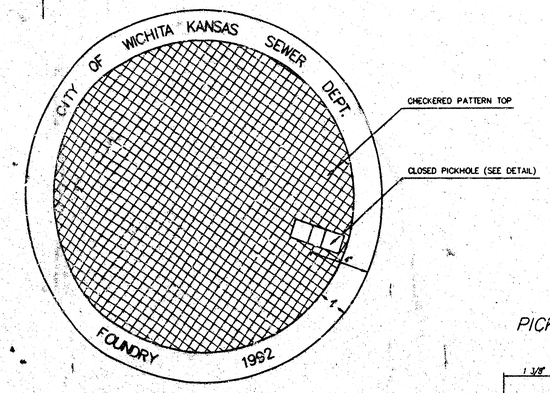

TOP VIEW

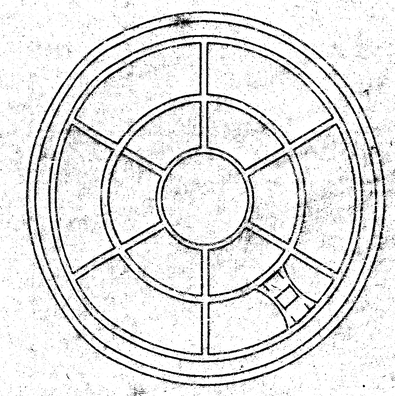

BOTTOM VIEW

PICKHOLE DETAIL

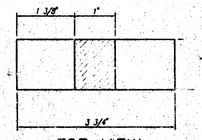

TOP VIEW

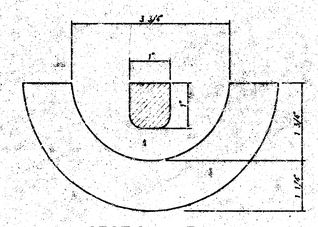

SECTION VIEW

MANHOLE FRAME
Weight = 240 Lbs.

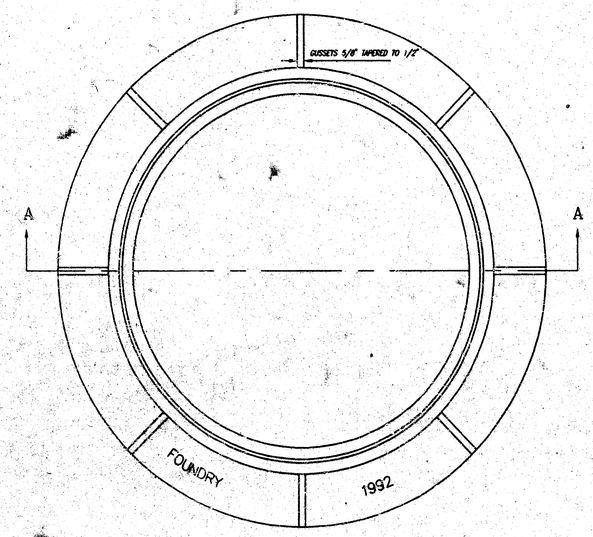

TOP VIEW

GENERAL NOTES

MANHOLE CASTINGS SHALL BE MANUFACTURED USING GOOD QUALITY GRAY IRON CONFORMING TO CLASS 30 OF A.S.T.M. DESIGNATION A-48. DIMENSIONS AND WEIGHTS SHOWN ON THE DETAILED DRAWINGS SHALL BE CONSIDERED AS MINIMUM REQUIREMENTS AND ANY DEVIATIONS FROM THE DIMENSIONS SHOWN MUST BE SPECIFICALLY APPROVED. THE FINISHED CASTINGS SHALL BE OF UNIFORM QUALITY, FREE FROM BLOWHOLES, POROSITY, HARD SPOTS, SHRINKAGE DISTORTIONS OR OTHER DEFECTS.

MANHOLE CASTINGS SHALL BE MANUFACTURED SUCH THAT A COVER MANUFACTURED BY ANY ONE FOUNDARY WILL FIT INTERCHANGEABLY INTO A FRAME MANUFACTURED BY ANOTHER FOUNDRY AND STILL MEET ALLOWABLE CLEARANCES AND NON-ROCKING REQUIREMENTS. THIS WILL REQUIRE MANUFACTURING OF THE MATCHING FACES ON THE COVER AND THE FRAME TO CLOSE TOLERANCES.

THE OUTSIDE CIRCUMFERENCE OF THE VERTICAL FACE OF THE COVER AND THE INSIDE CIRCUMFERENCE OF THE VERTICAL FACE IN THE FRAME RECESS SHALL BE MANUFACTURED TO TOLERANCES SUCH THAT THE CLEARANCE BETWEEN THE COVER AND FRAME WILL NOT EXCEED 1/8" AT ANY POINT AROUND THE CIRCUMFERENCE OF THE COVER. THE SEATING SURFACES BETWEEN THE COVER AND FRAME SHALL BE MACHINED SUCH AS THESE SURFACES SHALL MAKE FULL CONTACT FOR THEIR FULL CIRCUMFERENCE TO PRECLUDE THE COVER FROM ROCKING IN THE FRAME.

THE MANHOLE FRAME AND COVER SHALL BE MARKED WITH LETTERING INDICATING THE NAME OF THE MANUFACTURER AND THE YEAR WHEN THE COVER OR FRAME WAS CAST. THE COVER SHALL BE FURTHER IDENTIFIED WITH REGARDS TO OWNERSHIP USING LETTERS AT LEAST 1 INCH IN HEIGHT. THIS IDENTIFICATION SHALL BE "CITY OF WICHITA SEWER DEPARTMENT". THE WORD DEPARTMENT MAY BE ABBREVIATED. THE TEXTURE OF THE TOP SURFACE OF THE COVER SHALL BE MANUFACTURED IN A CHECKERED PATTERN DESIGN AS INDICATED ON THE DRAWINGS. SMOOTH BLOCKOUTS SHALL BE UTILIZED TO HIGHLIGHT THE LETTERING ON THE COVER SURFACE. THE TOTAL AREA OF SMOOTH SURFACE BLOCKOUT SHALL NOT EXCEED THE AREA AS INDICATED ON THE DRAWING. POSITIONING OF SMOOTH BLOCKOUTS AND LETTERING MAY VARY FROM THAT SHOWN ON THE DETAILED DRAWING.

MANHOLE CASTINGS SHALL WEIGH A MINIMUM OF 180 POUNDS ON THE SOLID COVER AND 240 POUNDS ON THE MANHOLE RING. THIS IS A TOTAL OF 420 POUNDS ON A RING AND COVER SET. CASTINGS WEIGHING LESS THAN THE MINIMUM SPECIFICATIONS WILL NOT BE ACCEPTED.

TO INSURE CONFORMANCE TO TENSILE STRENGTH REQUIREMENTS ALL CASTINGS SHALL BE JULIAN HEAT DATED WITH THE FOLLOWING REQUIREMENTS:

TWO TEST BAR SPECIMENS MUST BE POURED WHEN PRODUCING CITY OF WICHITA CASTINGS. ONE OF THE TEST BAR SPECIMENS SHALL BE SENT TO AN INDEPENDENT LABORATORY FOR TENSILE STRENGTH VERIFICATION TESTING. A TEST REPORT SHALL ACCOMPANY EACH SHIPMENT OF CASTINGS. THE HEAT DATE(S) ON THE CASTINGS SHALL RESPOND TO THE TENSILE STRENGTH REPORT(S). THE TEST REPORT WILL BE PAID FOR BY THE SUPPLIER. THE REMAINING TEST BAR SPECIMEN WILL BE SHIPPED TO SEWER MAINTENANCE AT 715 W. HARRY, WICHITA, KANSAS 67213.

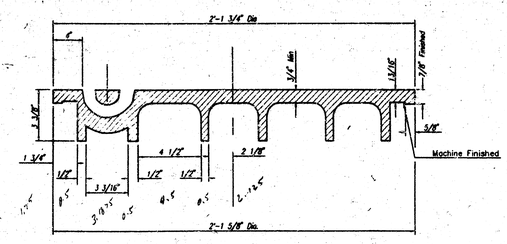

SECTION VIEW

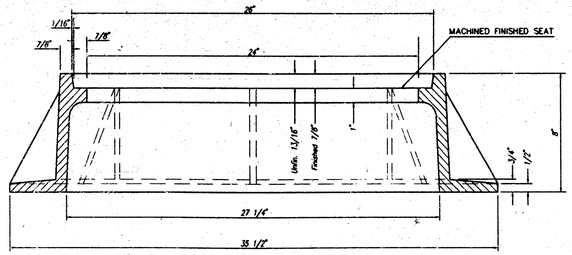

SECTION A-A

MANHOLE FRAME AND COVER DETAIL
ADOPTED AS STANDARD DESIGN BY
CITY OF WICHITA, KANSAS

CITY OF WICHITA, KANSAS
M. E. LINDEBAK — CITY ENGINEER

REVISED 6/27/83

PROJ. NO. 468-76-245-~~8203~~-000-000-001

SHEET 10 OF 11

PROJECT NO.	SHEET NO.	TOTAL SHEETS
468-76-245-82496-000-000-001	//	//

ALLIED LABORATORIES DEPARTMENT
O. S. GREENWOOD, P.E., Manager
W. H. IGLEHART, P.E., Assistant Manager

CONSTRUCTION DIVISION
J. E. MORRELL, JR., Geologist, Manager
A. E. HAAS, CET, Lab Supervisor
A. A. HIPEL, CET, Lab Supervisor
S. J. EDMONDSON, P.E.
J. S. LONON, SET, CWI
D. L. HAMAT, I.E.

SURVEY DIVISION
J. R. DEGROTT, L.S., Manager
M. D. CLIFFORD, L.S.
D. L. SCHMIDT, L.E.
G. E. HOLLINGSWORTH, L.S., CET

GEOTECHNICAL DIVISION
E. M. HERMAN, P.E., Manager
N. J. POYNOR, AET
R. B. SHONYELL, CET

KEY PERSONNEL
H. G. LINOE, E.I.T.
L. S. CHRISTENSON, L.E., SET
G. M. FRICKSON, SET
V. G. KESNAR, SET
J. W. BALLINGER, CET
J. E. NICHOLS, CET
B. S. CASSIL, CET
W. F. WELDING, SET
G. R. GREEN, CET
T. C. FOX, AET
C. E. POWELL, P.E.
J. M. GOODWIN, SET, CWI
C. E. DANIELS, AET
R. C. PEPOWSKI, AET

ALLIED LABORATORIES
A DEPARTMENT OF PROFESSIONAL ENGINEERING CONSULTANTS, P.A.

March 4, 1996

Mr. Dwaine Dunn
Professional Engineering Consultants, P.A.
303 South Topeka
Wichita, Kansas 67202

Re: Subsurface Exploration Results for
Northridge Lakes Phase II Pond, Wichita, Kansas
Allied Project No: 72-96049-5-147

Dear Mr. Dunn:

Allied Laboratories has completed a subsurface exploration at the above referenced project. The field exploration results are presented herein and on the attached boring logs, Figures 1 through 4.

The field exploration for this project consisted of drilling 2 exploratory borings to depths of 15 feet to explore subsurface and groundwater conditions. The exploratory borings were drilled at the locations indicated on the boring logs. Ground elevation at the boring locations was supplied by Allied Laboratories Survey Division based on City Datum.

Field exploration results indicate the subsurface conditions at the site generally consist of sandy clay and medium to high plasticity clay overlying silty sand to the depth investigated. Thin clay seams were observed in the silty sand in the lower portions of the borings. Groundwater was not encountered in boring B-1 during drilling. Groundwater was observed in boring B-2 at approximately 14 feet below the existing ground surface. A clay seam was observed in the bottom of boring B-2 which may indicate the groundwater was perched. Previous explorations indicate that perched water on clay seams is common in the project area. Water levels in this formation will vary throughout the year depending on climatic conditions, runoff, etc.

Should you have any questions regarding the data presented or if we may be of further assistance, please contact us at your convenience.

Sincerely,

ALLIED LABORATORIES

Steven M. Herman, P.E.
Geotechnical Division Manager

attachments

FORWARD ALL MAIL TO
ALLIED LABORATORIES
303 SOUTH TOPEKA
WICHITA, KANSAS 67202

CONSTRUCTION/SURVEY/GEOTECHNICAL
DIVISIONS LOCATED AT
350 SOUTH WASHINGTON
WICHITA, KANSAS 67202
(316) 262-0467
FAX NO. (316) 262-0282

PLAN	NOTE BOOK NO.	SURVEYED	PLOTTED	ALIGNMENT CHECKED	PTS. OF VER. CHECKED	BY	DATE

Allied Laboratories
350 South Washington
Wichita, Kansas 67202

PROFILE OF EXPLORATORY BORINGS

NORTHRIDGE LAKES PHASE II POND

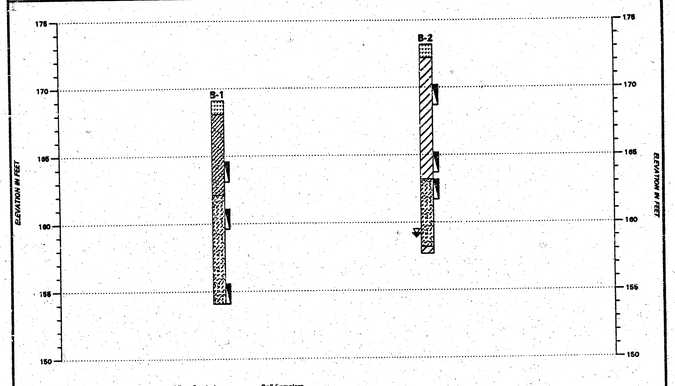

NOTE: Profiles are not proportional and may not present a cross section of the site.

Figure 1

Allied Laboratories
350 South Washington
Wichita, Kansas 67202

EXPLORATORY BORING LOG B-1

NORTHRIDGE LAKES PHASE II POND

PROJECT NO: 72-96049-5-147 | BORING LOCATION: Southwest End of Pond: N4931.2 E4261.5
SCALE: 1 IN = 4 FT. | BORING DATE 1-29-96 | DRILLER KJP | LOGGED BY RBB | CHECKED BY SMH
WATER LEVEL @ DRILL Dry | DATE 1-29-96 | WATER LEVEL AFTER DRILL | DATE

LOG	ELEVATION	SOIL DESCRIPTION	S No.	TOOL	SPT	% Moist.	Dry Unit Wt. lbs/ft	Cu lbs/ft	% Sand	% Fines	LL	PI
0	189.1	*TOPSOIL: silty sand, brown, moist*										
	188.1	*SANDY CLAY: reddish brown, moist, stiff*	1-1	F								
4												
	182.1	*SILTY SAND: red, moist, medium dense, fine grained*	1-2	F								
8		*... very moist*										
12		*... slightly clayey*	1-3	F								
	184.1	End of boring at 15 feet.										
16												
20												
24												
28												

NOTE: This information only pertains to this boring at the time of ... ling and may not be indicative of entire site.

Figure 2

Allied Laboratories
350 South Washington
Wichita, Kansas 67202

EXPLORATORY BORING LOG B-2

NORTHRIDGE LAKES PHASE II POND

PROJECT NO: 72-96049-5-147 | BORING LOCATION: Northeast End of Pond: N4364.1 E4797.6
SCALE: 1 IN = 4 FT. | BORING DATE 1-29-96 | DRILLER KJP | LOGGED BY RBB | CHECKED BY SMH
WATER LEVEL @ DRILL 14.0 | DATE 1-25-96 | WATER LEVEL AFTER DRILL | DATE

LOG	ELEVATION	SOIL DESCRIPTION	S No.	TOOL	SPT	% Moist.	Dry Unit Wt. lbs/ft	Cu lbs/ft	% Sand	% Fines	LL	PI
0	173.2	*TOPSOIL: silty sand, brown, moist*										
	172.2	*CLAY: dark grey, moist, stiff, medium to high plasticity*	2-1	F								
4		*... grades to sandy lean clay, grey to yellow-brown, very moist*										
8			2-2	F								
	163.2	*SILTY SAND: grey, moist, medium dense, fine grained*	2-3	F								
12		*... very moist*										
DRILL WATER		*... saturated*										
	158.2	*... clayey, possible clay seam*										
16	157.7	End of boring at 15.5 feet.										
20												
24												
28												

NOTE: This information only pertains to this boring at the time of drilling and may not be indicative of entire site.

Figure 3

Allied Laboratories
350 South Washington
Wichita, Kansas 67202

EXPLORATORY BORING LEGEND

NORTHRIDGE LAKES PHASE II POND

Strata symbols
- Topsoil
- Sandy Clay
- Silty sand
- Clay: medium to high plasticity

Misc. Symbols
- Depth of wet cave after drilling
- Water level during drilling

Soil Samplers
- Grab sample from auger cuttings

Notes:

1. Exploratory borings were drilled on 1-29-96 with a Mobile Drill B-31 drill rig utilizing 4 inch diameter continuous flight auger.
2. Water levels in the borings were estimated based on depth to wet cave and observation of auger cuttings during drilling.
3. Borings were located referencing existing site features. Elevations were determined by Allied Laboratories Survey Division by referencing city datum.
4. Depths to transitions between soil types presented on the exploratory boring logs are approximate within the limits of this investigation.

Figure 4

STORM WATER SEWER NO. 463

BORING LOGS

PROFESSIONAL ENGINEERING CONSULTANTS, P.A.
ENGINEERS
WICHITA, KANSAS

Designed by	BER, GDD	Checked by		
Drawn by	BJS	Date	APRIL 1996	Job No. 95049-3

//

N-S-5-N

usr/ustn/dgn:1/1996/96049/003/borng1og.dgn
date plotted: april 23,1996
deliver to: dwaine dunn