PRIVATE
STORM SEWER PLANS FOR
STAR LUMBER

INDEX NO. 607861
USER CODE 422PPS

CITY OF WICHITA, KANSAS

MICHAEL E. LINDEBAK, CITY ENGINEER

OCTOBER, 1993

GENERAL NOTES

1. THE TOPS OF INLETS AS NOTED ON THE PLANS MAY VARY SO AS TO MEET PROPOSED TOP OF CURB ELEVATIONS OR PAVEMENT ELEVATIONS. THE FIELD ENGINEER SHALL LOCATE INLETS WITH REFERENCE TO PROPOSED PAVING PLANS OF THE PERTINENT STREETS.
2. ALL CONCRETE SHALL BE STANDARD PAVING MIX UNLESS OTHERWISE NOTED.
3. THE CONTRACTOR SHALL BE RESPONSIBLE FOR PRESERVING PROPERTY IRONS. THE CONTRACTOR SHALL BE REQUIRED TO RE-ESTABLISH ANY PROPERTY IRONS WHICH ARE DAMAGED OR DESTROYED BY HIS CONSTRUCTION OPERATIONS. SUCH IRONS SHALL BE RE-ESTABLISHED BY A LICENSED LAND SURVEYOR IN ACCORDANCE WITH STATE LAWS.
5. CONTRACTOR SHALL NOTIFY UTILITY COMPANIES OF CONSTRUCTION SCHEDULING.
6. EXISTING UTILITIES AND THEIR LOCATIONS, AS SHOWN ON THE PLANS REPRESENT THE BEST INFORMATION OBTAINABLE FOR DESIGN. LOCATION INFORMATION HAS BEEN OBTAINED FROM THE VARIOUS COMPANIES AND IS EITHER FROM COMPANY UTILITY DRAWINGS OR COMPANY PROVIDED FIELD LOCATIONS. THE PLAN LOCATIONS SHOWN ARE NOT GUARANTEED. ADDITIONAL EXISTING UTILITIES MAY ALSO BE ENCOUNTERED.

NOTE: NOTIFY THE FOLLOWING COMPANIES PRIOR TO ANY EXCAVATION:

KPL GAS SERVICE COMPANY	263-7511
KANSAS GAS & ELECTRIC	264-1141
SOUTHWEST BELL TELEPHONE COMPANY	1-571-2611
CITY OF WICHITA WATER & SEW. DEPT.	268-4908
KANSAS ONE-CALL	1-800-344-7233

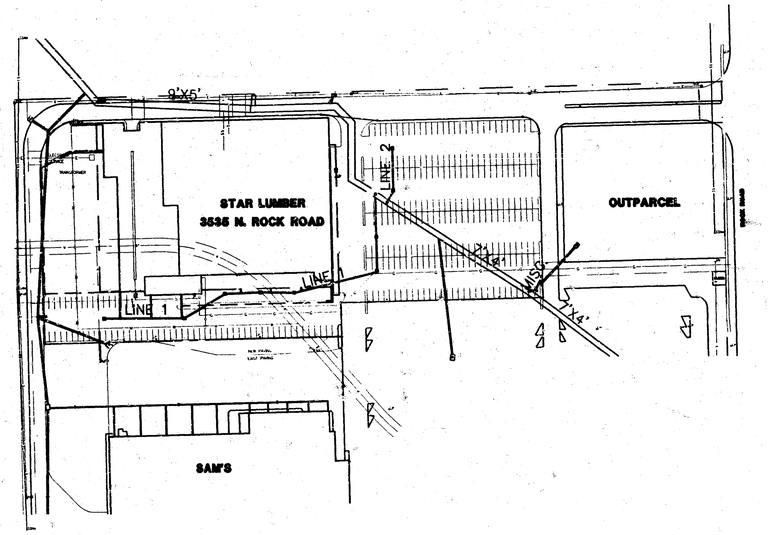

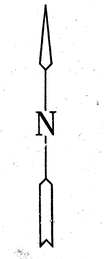

SCALE: 1" = 300'

APPROVED AS NOTED
BY CITY ENGINEER OF WICHITA

SANITARY SEWERS_____

STORM SEWERS VRH 10/21/93

DRIVEWAY APPROACH_____

WATER MAINS_____

PAVING_____

NOTE TO CONTRACTOR

INSPECTION AND TESTING FOR THIS PROJECT IS TO BE PROVIDED BY A LICENSED CONSULTING ENGINEERING FIRM UNDER CONTRACT WITH THE OWNER/DEVELOPER. SAID INSPECTION TO BE IN ACCORDANCE WITH THE CITY OF WICHITA STANDARD CONSTRUCTION ENGINEERING PRACTICES AND CERTIFIED BY A LICENSED PROFESSIONAL ENGINEER. NO WORK SHALL BE PERFORMED IN DEDICATED EASEMENTS OR THE PUBLIC RIGHT-OF-WAY BY THE CONTRACTOR WITHOUT SUCH INSPECTION NOR SHALL ANY WORK BE COMMENCED IN DEDICATED EASEMENTS OR PUBLIC RIGHT-OF-WAY WITHOUT WRITTEN AUTHORIZATION BY THE CITY ENGINEER.

INDEX TO DRAWINGS

SHEET NO.	DESCRIPTION
1	TITLE SHEET
2	LINE 1
3	LINE 2 & MISC. WORK
4	MANHOLE DETAILS
5	DROP INLET DETAILS
6	PRECAST MANHOLE DETAILS

BENCHMARKS

B.M. #1 "□" CUT, N.W. CORNER OF INLET, + 24' S. AND + 25' E. OF THE N.W. PROP. CORNER LOT 1, BLOCK 1, COMOTARA POWER CENTER ADDITION.
ELEV. = 1377.90 (NGVD)
ELEV. = 190.50 (WICHITA DATUM)

B.M. #2 "□" CUT, N.W. CORNER OF INLET, + 2' S. AND + 500' E. OF THE N.W. PROPERTY CORNER LOT 1, BLOCK 1, COMOTARA POWER CENTER ADDITION.
ELEV. = 1381.35 (NGVD)
ELEV. = 193.95 (WICHITA DATUM)

BOOKED 8-11-94 MCG

AS BUILT ~~11-29-93~~ 2-21-94

STAR LUMBER

PRIVATE STORM WATER SEWER

Design JNJ
Drawn by DLM
Checked by
Date 10/93
Job no.

MID-KANSAS ENGINEERING CONSULTANTS INC.
3500 NORTH ROCK ROAD
BUILDING #800
WICHITA, KANSAS 67226
(316) 636-5566

Sheet 1 of 6

J. NEIL JEDNORALSKI LICENSED 4497 21 OCT 93 KANSAS PROFESSIONAL ENGINEER

M.K.E.C. PROJ. NO. 93-28-100-D

STAR LUMBER
STORM WATER SEWER
USER CODE 422PPS

SCALE: 1" = 20' HORIZ.
1" = 5' VERT.

STA. 1+42.0, LINE 1
CONST. PRECAST 5-FT. DIA. MANHOLE WITH SOLID LID
MANHOLE TOP = ~~1383.15~~ A.B.
N. ~~3977.6316~~ 3977.4 A.B.
E. ~~4476.5778~~ 4476.7 A.B.

STA. 1+74.5, LINE 1
CONST. PRECAST 5-FT. DIA. MANHOLE WITH DEETER #1940 GRATE AND FRAME 1382.40 A.B.
MANHOLE TOP = ~~1382.5~~
N. ~~4005.5094~~ 4005.4 A.B.
E. ~~4476.0816~~ 4475.0 A.B.

STA. 0+62.8, LINE 1
CONST. PRECAST 5-FT. DIA. MANHOLE WITH DEETER #1940 GRATE AND FRAME
MANHOLE TOP = ~~1382.0~~ 1381.93 A.B.
N. ~~4057.0780~~ 4056.3 A.B.
E. ~~4476.1904~~ 4474.8 A.B.

STA. 0+00.0, LINE 1
CONST. TYPE "B" MANHOLE STACK ON TOP OF 7'X4' RCB
MANHOLE TOP = 1381.80 A.B.
TIE-IN NEW 30" RCP
SEE DETAILS SHEET 3 OF 6
N. ~~4120.0533~~ 4120.2 A.B.
E. ~~4474.0384~~ 4475.6 A.B.

STA. 2+70.3, LINE 1
CONST. PRECAST 5-FT. DIA. MANHOLE WITH DEETER #1940 GRATE AND FRAME
MANHOLE TOP = ~~1382.5~~ 1382.43 A.B.
N. ~~3967.9813~~ 3968.0 A.B.
E. ~~4318.5715~~ 4348.5 A.B.

STA. 3+95.3, LINE 1
CONST. PRECAST 5-FT. DIA. MANHOLE WITH DEETER #1940 GRATE AND FRAME
MANHOLE TOP = ~~1382.5~~ 1382.40 A.B.
N. ~~3965.1913~~ 3965.1 A.B.
E. ~~4203.7983~~ 4223.3 A.B.

STA. 4+49, LINE 1
CONST. C.O.W. STD. DROP INLET DOUBLE 24"X24"
INLET TOP = 1382.5 A.B.
N. ~~3937.3620~~ 3937.3 A.B.
E. ~~4177.4106~~ 4177.7 A.B.

STA. 5+72, LINE 1
CONST. C.O.W. STD. DROP INLET DOUBLE 24"X24"
INLET TOP = ~~1382.0~~ 1382.05 A.B.
N. ~~3937.3441~~ 3937.1 A.B.
E. ~~4064.4167~~ 4054.6 A.B.

24" RCP LINE 1
30" RCP LINE 1
30" RCP LINE 1
24" RCP LINE 1
24" RCP LINE 1
15" RCP LINE 1
24" RCP LINE 2
7'X4' RCB
STORM BOX
PROP. FENCE
60'
68.32'
35.27'
44.0 A.B.
105.5 A.B.
93.55'
8" U.G. PIPING FROM ROOF DOWNSPOUTS TO STORM SEWER TYPICAL SOUTH SIDE 6 PLACES
ABANDONED SSMH
WATER MAIN TO BE ABANDONED
WATER SERVICE
ABANDON PORTION OF SERVICE TO HYDRANT
MAIN FLOOR LEVEL 83.5
ALL SALES AREA
STAR LUMBER
MD OIL SEPARATOR
NEW EASEMENT FOR STORM SEWER
PROP. FENCE
NEW EASEMENT FOR SAN SEWER
SSMH
KGE
1020.45
N1°04'59"W

PLAN LINE 1

PROFILE LINE 1

ELEVATION IN FEET (NGVD)

EXISTING GROUND

APPROXIMATE FUTURE GRADE
FINAL GRADING BY ARCHITECT
WITH PAVING PLANS

62.8 L.F. 30" RCP @ 0.21%
51.7 L.F. 30" RCP @ 0.19%
27.5 L.F. 24" RCP @ 0.22%
128.3 L.F. 24" RCP @ 0.21%
1250 L.F. 24" RCP @ 0.22%
53.7 L.F. 24" RCP @ 0.24%
123.0 L.F. 15" RCP @ 0.41%

STA. 0-00, LINE 1 CONST. TYPE "B" MANHOLE STACK ON TOP OF 7'X4' RCB MANHOLE TOP = 1381.8 A.B. TIE-IN NEW 30" RCP
E RCB = ~~1374.65~~ 1374.65 A.B.
E IN = ~~1375.15~~ (30" RCP-S.) ~~1374.65~~ A.B.

STA. 0+62.8, LINE 1 CONST. PRECAST 5-FT. DIA. MANHOLE WITH DEETER #1940 GRATE AND FRAME MANHOLE TOP = ~~1382.0~~ 1381.93 A.B.
E OUT = ~~1375.36~~ (30" RCP-N.) 1375.2 A.B.
E IN = ~~1375.36~~ (30" RCP-S.) 1375.2 A.B.
E = 1376.43

STA. 0+82.8 LINE 1 CONST. PRECAST 5-FT. DIA. MANHOLE WITH DEETER #1940 GRATE & FRAME MANHOLE TOP = ~~1382.0~~ 1381.93 A.B.

STA. 1+74.5, LINE 1 CONST. PRECAST 5-FT. DIA. MANHOLE WITH DEETER #1940 GRATE & FRAME MANHOLE TOP = ~~1382.5~~ 1382.40 A.B.
E OUT = ~~1375.39~~ (30" RCP-N.) 1375.3 A.B.
E IN = ~~1375.39~~ (24" RCP-S.) 1375.9 A.B.
E = 1376.23

STA. 1+42.0, LINE 1 CONST. PRECAST 5-FT. DIA. MANHOLE WITH SOLID LID MANHOLE TOP = 1383.15 A.B.
E OUT = ~~1376.01~~ (24" RCP-N.) A.B.
E IN = 1376.11 (24" RCP-W.) A.B.

STA. 2+70.3, LINE 1 CONST. PRECAST 5-FT. DIA. MANHOLE WITH DEETER #1940 GRATE & FRAME MANHOLE TOP = ~~1382.5~~ 1382.43 A.B.
E OUT = ~~1376.39~~ (24" RCP-E.) 1376.3 A.B.
E IN = ~~1376.48~~ (24" RCP-W.) 1376.1 A.B.
E = 1376.55

STA. 3+95.3, LINE 1 CONST. PRECAST 5-FT. DIA. MANHOLE WITH DEETER #1940 GRATE & FRAME MANHOLE TOP = ~~1382.5~~ 1382.40 A.B.
E OUT = 1376.76 (24" RCP-E.) 1376.6 A.B.
E IN = 1376.86 (24" RCP-S.W.) 1376.7 A.B.
E = 1376.87

STA. 4+49, LINE 1 CONST. C.O.W. STD. DROP INLET DOUBLE 24"X 24" INLET TOP = 1382.5 A.B.
E OUT = 1377.19 (24" RCP-N.E.) 1377.0 A.B.
E IN = 1377.29 (15" RCP-W.) 1377.5 A.B.
E = 1377.94

STA. 5+72, LINE 1 CONST. C.O.W. STD. DROP INLET DOUBLE 24"X 24" INLET TOP = ~~1382.0~~ 1382.05 A.B.
E OUT = ~~1382.15~~ (15" RCP-E.) 1382.0 A.B.

2-21-94
AS BUILT ~~11-29-93~~

M.K.E.C. PROJ. NO. 93-28-100-D
REVISION FOR S.P.S.H. - 26 OCT. 93, JNJ

STAR LUMBER
STORM WATER SEWER
USER CODE 422PPS

STAR LUMBER

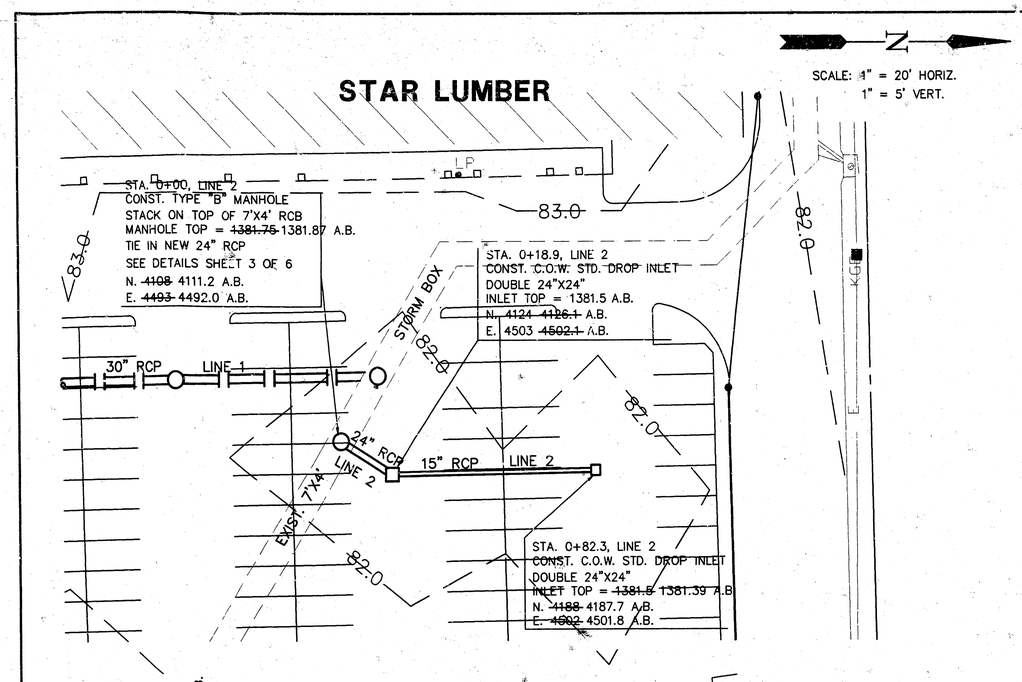

PLAN LINE 2

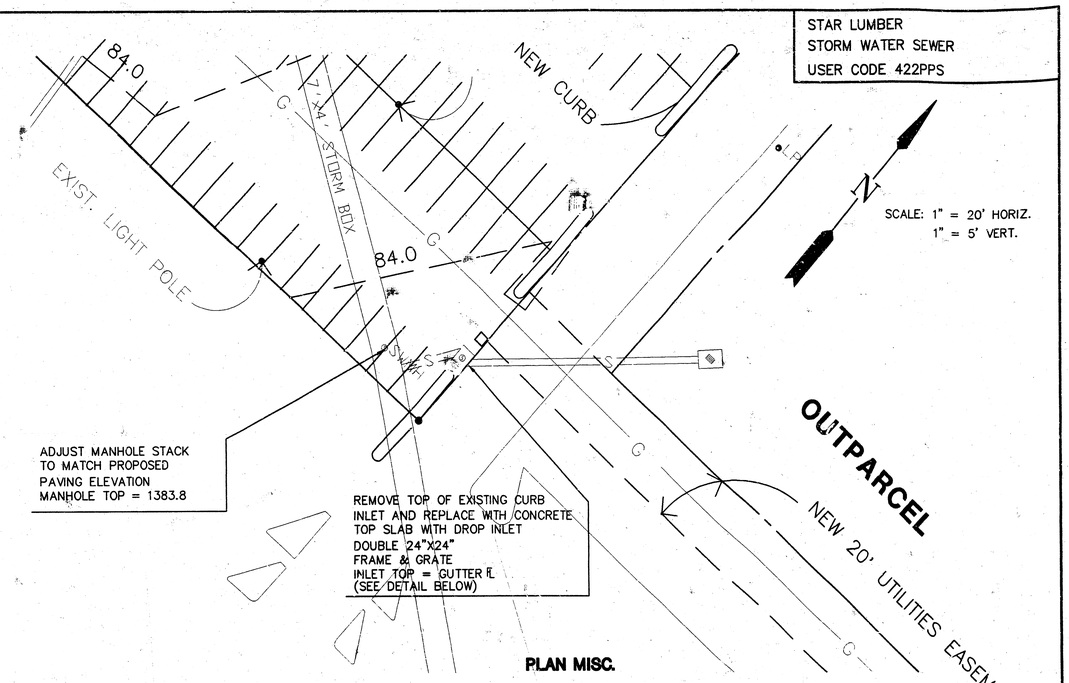

PLAN MISC.

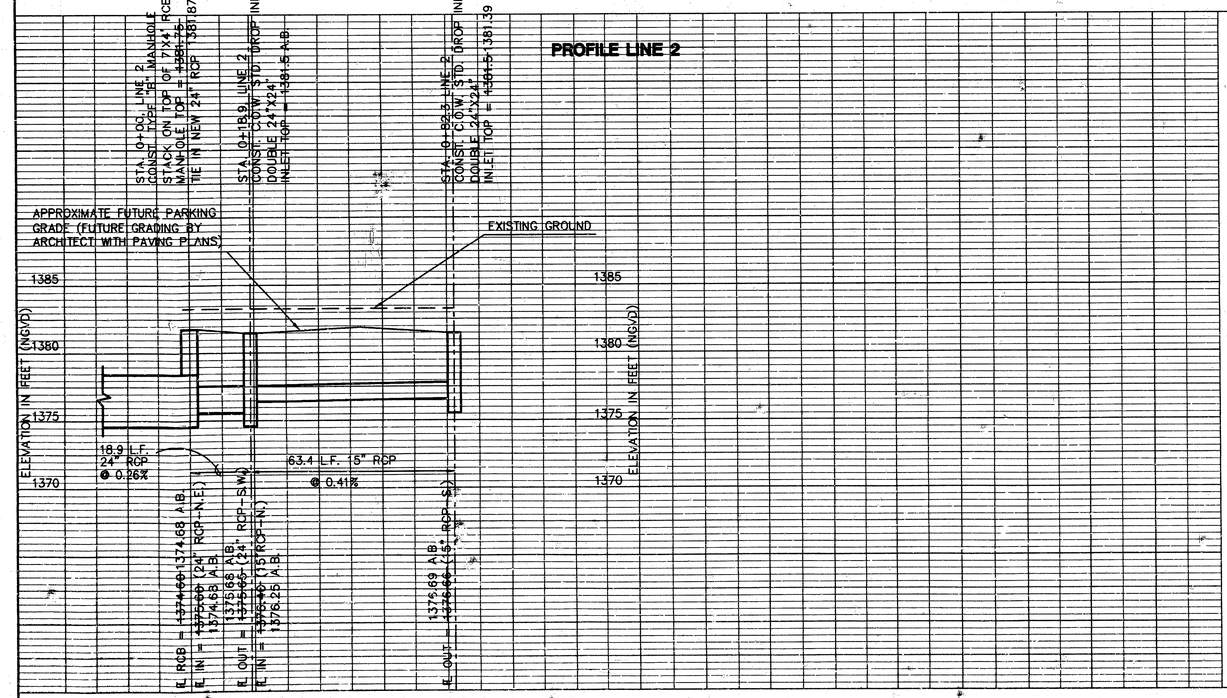

PROFILE LINE 2

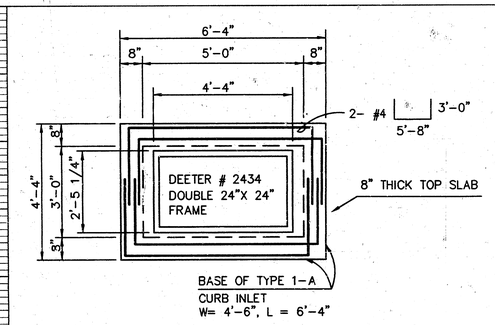

CONCRETE TOP SLAB

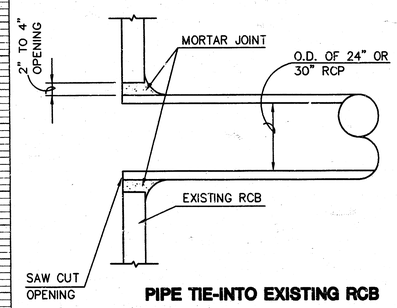

PIPE TIE-INTO EXISTING RCB

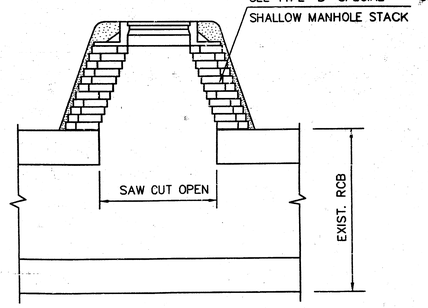

MANHOLE STACK ON EXISTING RCB

3
6

AS BUILT 11-29-93

M.K.E.C. PROJ. NO. 93-28-100-D

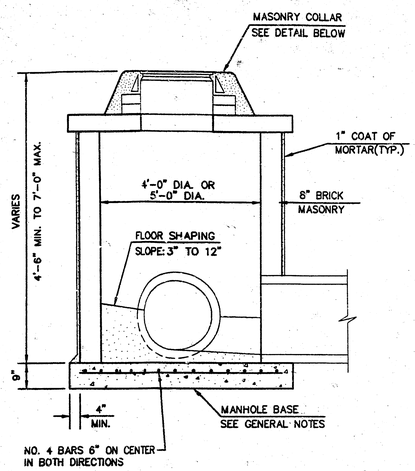

SHALLOW TYPE "A" MANHOLE

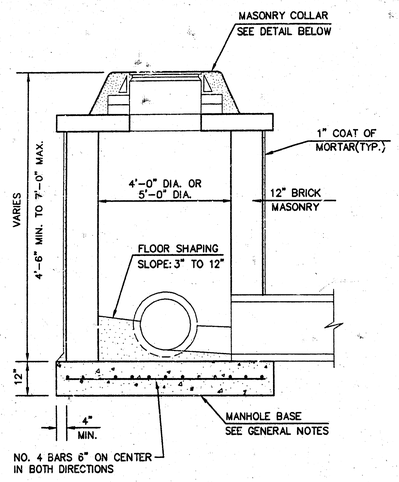

SHALLOW TYPE "B" MANHOLE

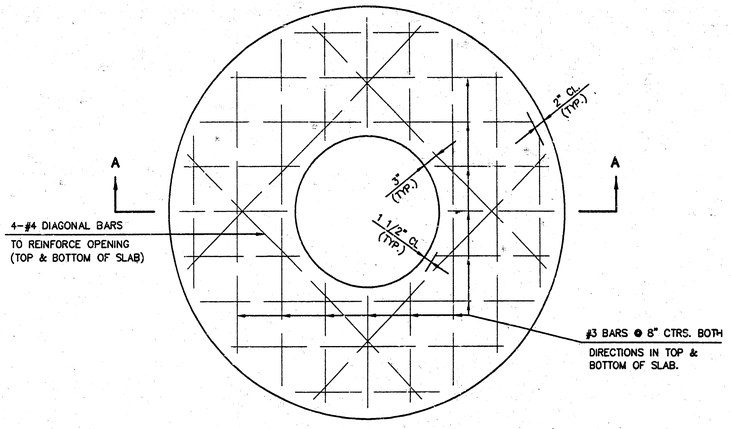

PLAN

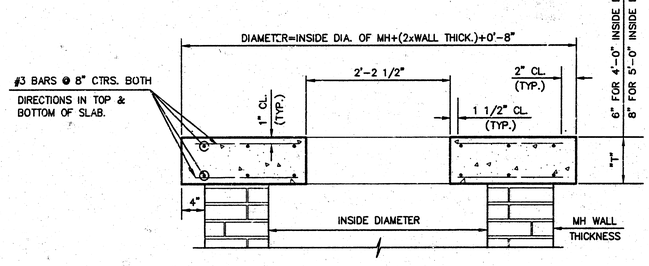

SECTION A-A

FLAT CONCRETE SLAB DETAILS

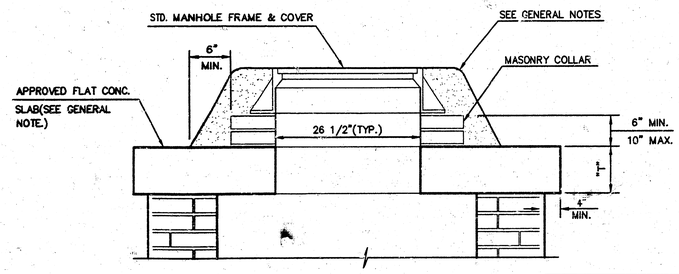

MASONRY COLLAR DETAIL

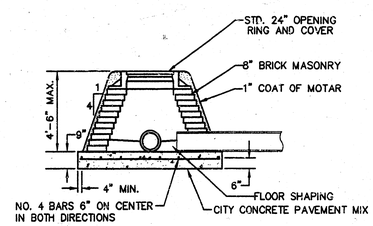

SPECIAL SHALLOW TYPE "A" MANHOLE

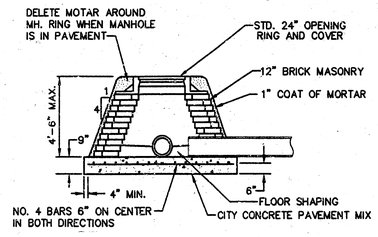

SPECIAL SHALLOW TYPE "B" MANHOLE

GENERAL NOTES

1. MOTAR USED IN MASONRY CONSTRUCTION SHALL CONTAIN 8 SACKS OF CEMENT PER CUBIC YARD. CONCRETE USED IN MANHOLE BASES SHALL CONFORM TO THE REQUIREMENTS OF CONCRETE FOR CONCRETE PAVEMENT CONSTRUCTION AS SPECIFIED IN THE CITY STANDARD PAVING SPECIFICATIONS USING CITY CONCRETE CEMENT MIX WITHOUT AIR ENTAINING ADMIXTURE. MOTAR SHALL BE PLACED AROUND THE MANHOLE RING AS SHOWN ON THE DRAWINGS WHEN MANHOLES ARE CONSTRUCTED IN UNPAVED AREAS. TYPE "A" SHALLOW MANHOLES CAN BE USED ON SEWERS WHEN THE MANHOLE IS NOT LOCATED WITHIN PUBLIC STREET PAVEMENT. MANHOLES CONSTRUCTED WHERE PIPE SIZES ARE SMALLER THAN 24" SHALL HAVE AN INSIDE DIAMETER OF 4'. MANHOLES CONSTRUCTED WHERE PIPE SIZES ARE 24" OR LARGER SHALL HAVE AN INSIDE DIAMETER OF 5'. COMPLETED MANHOLE SHALL BE WITHOUT LEAKS AND WATER TIGHT.
2. REINFORCING STEEL SHALL BE INSTALLED IN THE MANHOLE BASES AND SHALL CONSIST OF NO. 4 BARS PLACED ON 6" CENTERS IN BOTH DIRECTIONS. THE MANHOLE BASE REINFORCEMENT SHALL BE PLACED 6" ABOVE THE BOTTOM OF THE MANHOLE BASE. ALL COSTS FOR FURNISHING AND INSTALLING REINFORCING STEEL SHALL BE INCLUDED IN THE UNIT PRICE BID FOR THE MANHOLE.
3. THE FLOORS OF ALL MANHOLES SHALL BE SHAPED WITH FLOW CHANNELS SUCH THAT THE MANHOLES WILL BE SELF CLEANING AND FREE OF AREAS WHERE SOLIDS COULD BE DEPOSITED AS SEWAGE FLOWS THROUGH THE MANHOLE FROM ALL INLET PIPES TO THE OUTLET PIPE. FLOW CHANNELS SHALL BE FORMED TO MATCH THE BOTTOM HALVES OF THE INFLOWING PIPES AND THE OUTFLOWING PIPE AS SHOWN BY THE DRAWINGS. MANHOLE FLOORS SHALL HAVE SLOPES OF 3 INCHES PER FOOT IN THE AREAS OUTSIDE OF THE FLOW CHANNELS SLOPED TOWARD THE FLOW CHANNELS. PIPES LAID THROUGH MANHOLES SHALL HAVE THE TOP HALF REMOVED TO NEAT LINES FOR THE FULL INSIDE DIAMETER OF THE MANHOLE. MANHOLE FLOORS SHALL THEN BE SHAPED AROUND THE BOTTOM HALF OF THE PIPE WHICH FORMS THE FLOW CHANNEL.
4. PIPES INSTALLED WITHIN THE EXCAVATION MADE FOR THE MANHOLE SHALL BE CRADLED WITH CONCRETE TO THE LIMITS OF THE MANHOLE EXCAVATION. WHEN CLAY PIPE IS USED, THE CRADLE SHALL EXTEND TO THE FIRST JOINT OUTSIDE THE MANHOLE. THE CRADLE SHALL BE TERMINATED AT THE CLAY PIPE JOINT IN A MANNER WHICH WILL MAINTAIN THE FLEXIBILITY OF THE JOINT. COST OF CRADLE WITHIN MANHOLE EXCAVATION OR TO CLAY PIPE JOINTS ADJACENT TO MANHOLE SHALL BE INCLUDED IN THE UNIT PRICE BID FOR THE MANHOLE.
5. MANHOLE COVER CASTINGS AND MANHOLE FRAME CASTINGS SHALL CONFORM TO THE REQUIREMENTS AS INDICATED IN THE STANDARD SPECIFICATIONS AND AS SHOWN IN THE STANDARD DETAIL DRAWINGS.
6. THE CROWNS OF INFLOWING PIPES SHALL NEVER BE SET LOWER THAN THE CROWN OF THE OUTFLOWING PIPE.
7. STANDARD SHALLOW MANHOLES TYPE "A" AND "B" SHALL BE PAID FOR AT THE UNIT PRICE BID PER EACH FOR THE TYPE AND DIAMETER INDICATED. STANDARD SPECIAL SHALLOW MANHOLES TYPE "A" AND "B" SHALL BE PAID FOR AT THE UNIT PRICE BID PER EACH FOR THE TYPE INDICATED. ALL STANDARD SHALLOW MANHOLE DIAMETERS WILL BE 4' UNLESS INDICATED OTHERWISE.

AS BUILT 11-29-93

STANDARD SHALLOW MANHOLES TYPE "A" AND TYPE "B"

CITY OF WICHITA, KANSAS

Design C.O.W.	Checked by	Checked by	
Drawn by	Date	Date	SHEET NO. 4 6

MKEC PROJ. NO. 93-28-100-D

MHAB

NOTE: GRATES SHALL BE IMPRINTED ON THE TOP SURFACE WITH "CITY OF WICHITA" USING LETTERS AT LEAST 1" IN HEIGHT. OTHER MARKING METHODS MAY BE USED ONLY IF APPROVED BY THE ENGINEER.

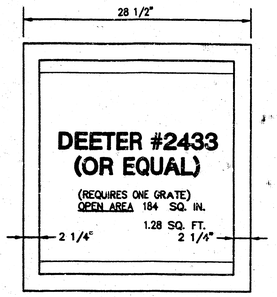

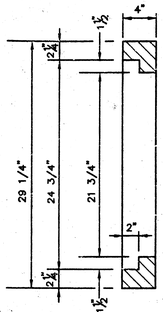

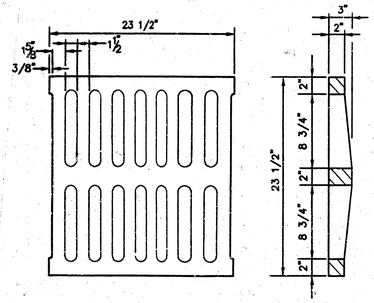

GRATE

24"x24" FRAME & GRATE DETAIL

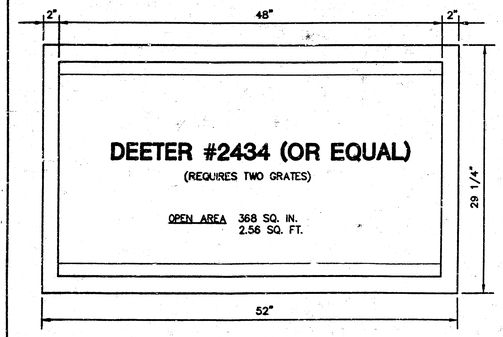

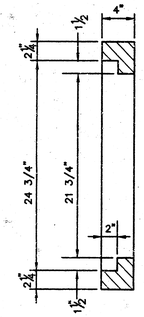

DOUBLE 24"x24" FRAME DETAIL

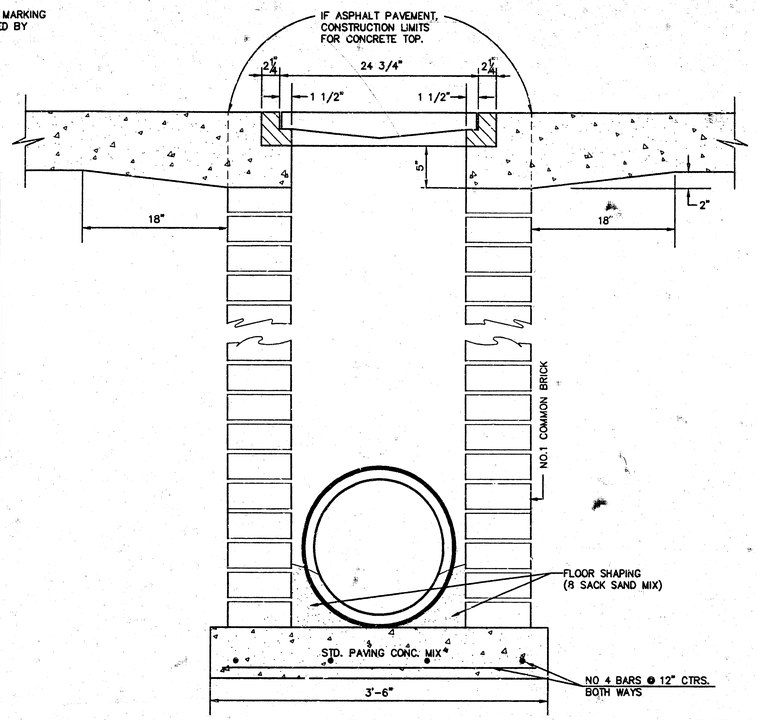

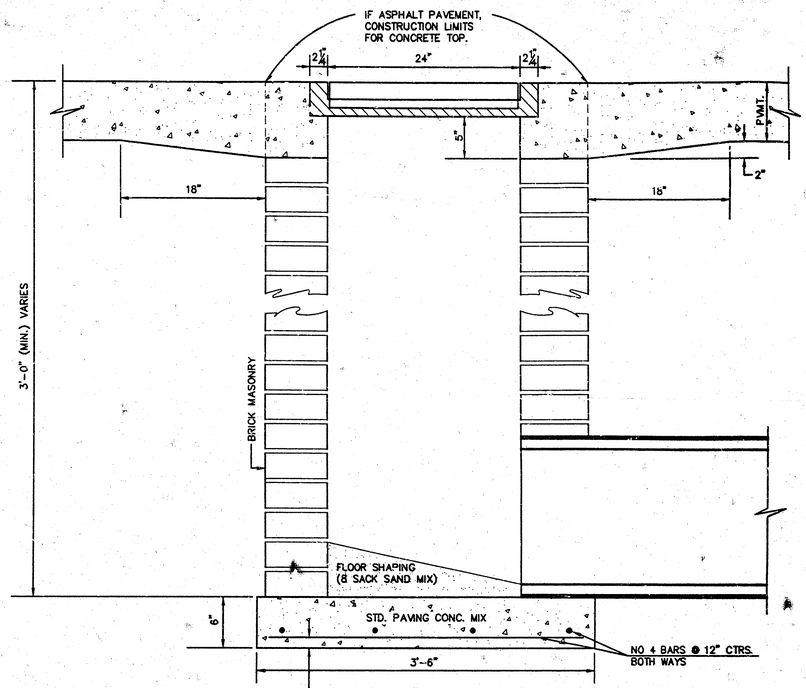

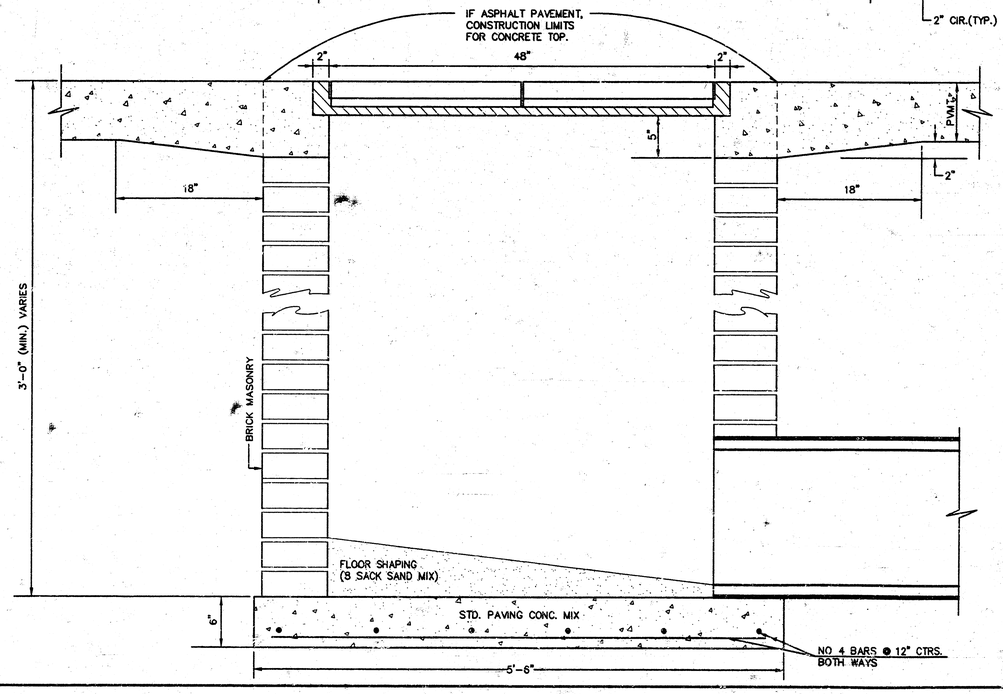

ORIFICE EQUATION		
Q=CA $\sqrt{2gh}$ C=0.60		
h (DEPTH)	#2433 (SINGLE)	#2434 (DOUBLE)
0.1	1.95 cfs	3.89 cfs
0.2	2.75 cfs	5.50 cfs
0.3	3.37 cfs	6.74 cfs
0.4	3.89 cfs	7.78 cfs
0.5	4.35 cfs	8.70 cfs
0.6	4.77 cfs	9.53 cfs
0.7	5.15 cfs	10.30 cfs
0.8	5.50 cfs	11.01 cfs
0.9	5.84 cfs	11.67 cfs
1.0	6.15 cfs	12.30 cfs

REVISED: 5-8-90 JNJ AS BUILT 11-29-93

DROP INLET DETAILS

CITY OF WICHITA, KANSAS

Design C.O.W.	Checked by	Checked by	
Drawn by	Date	Date	SHEET NO. 5 6

MKEC PROJ. NO. 93-28-100-D. DND

SEWER APPURTENANCES DETAILS

ADOPTED AS STANDARD DESIGN BY CITY OF WICHITA

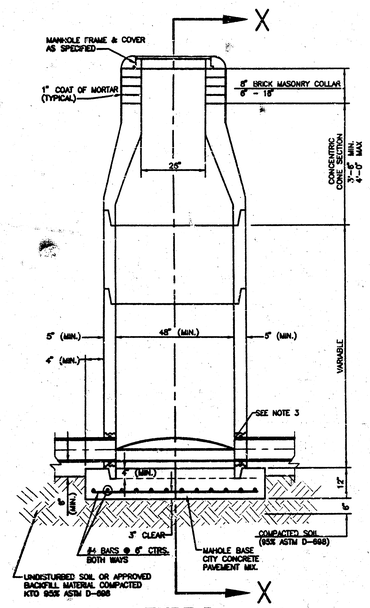

TYPE P
STANDARD MANHOLE

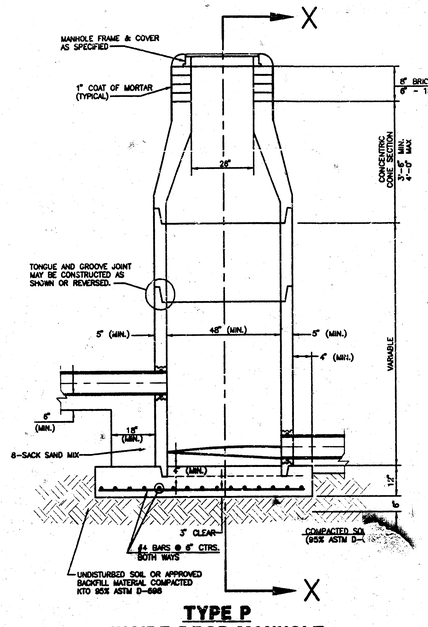

TYPE P
INSIDE DROP MANHOLE

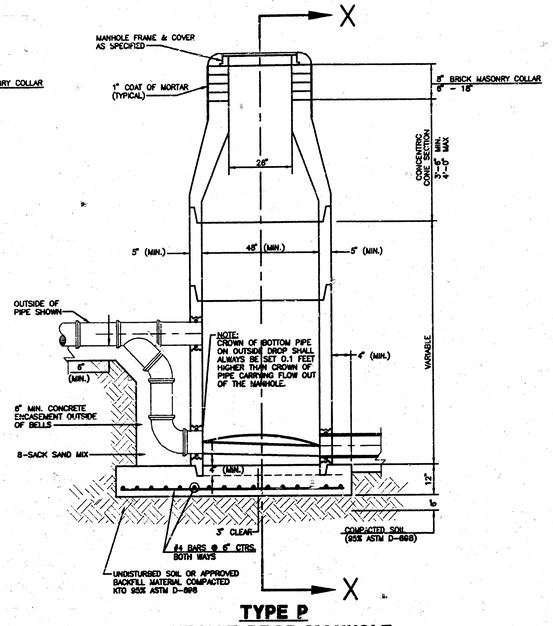

TYPE P
OUTSIDE DROP MANHOLE

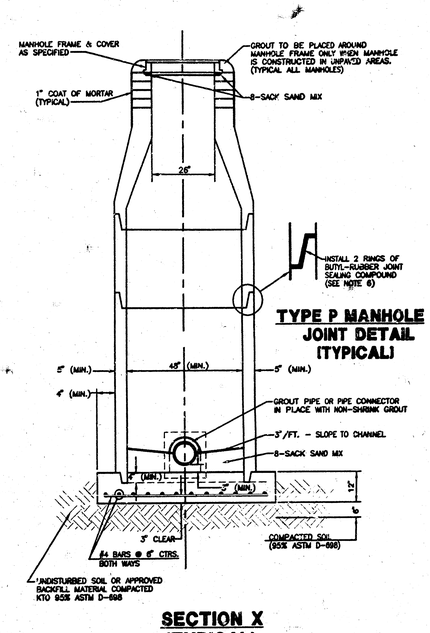

TYPE P MANHOLE JOINT DETAIL (TYPICAL)

SECTION X (TYPICAL)

GENERAL NOTES

1. ALL PRECAST CONCRETE MANHOLE SECTIONS SHALL CONFORM TO THE LATEST REVISIONS OF A.S.T.M. C478 AS MODIFIED BY THE SPECIFICATIONS.
2. NON-SHRINK GROUT SHALL BE NON-METALLIC TYPE.
3. APPROVED FLEXIBLE WATERSTOP GASKETS SHALL BE INSTALLED TO JOIN THE SEWER TO THE MANHOLE WALL WHEN A.B.S. COMPOSITE PIPE OR P.V.C. PIPE IS USED. FOR OTHER TYPES OF PIPE THE SEWER SHALL BE GROUTED IN PLACE WITH NON-SHRINK GROUT. THE SEWER PIPE SHALL BE SUPPORTED WITH CONCRETE ENCASEMENT A MINIMUM OF 3 FEET FROM THE MANHOLE WALL AND TO THE FIRST JOINT FOR V.C.P. SUCH THAT THE JOINT REMAINS FLEXIBLE.
4. ALL INSIDE SURFACES OF THE CONCRETE MANHOLE WHICH WOULD BE EXPOSED TO SEWER GAS SHALL BE COATED WITH 2 COATS THEMEC SERIES 66 HI-BUILD EPOXOLINE, DRY THICKNESS OF 8 MILS (MIN.)
5. EXTERIOR MANHOLE WALLS SHALL BE COATED WITH 1 COAT MOBILARMA 633 BITUMINUS COATING.
6. JOINT SEALING COMPOUND SHALL BE KENT SEAL NO. 2 OR APPROVED EQUAL.
7. PRECAST MANHOLES SHALL BE SET AT LEAST 4 INCHES INTO THE MANHOLE BASE.
8. TOP OF MANHOLE FLOOR SLAB SHALL BE AT LEAST 3 INCHES BELOW THE FLOW LINE OF THE OUTLET PIPE TO INSURE SUFFICIENT MINIMUM THICKNESS OF SHAPED INVERT.
9. LIFTING HOLES SHALL BE FILLED WITH NON-SHRINK GROUT AND THE INTERIOR SURFACE COATED AS SPECIFIED.
10. MORTAR USED IN MASONRY CONSTRUCTION SHALL CONTAIN 8 SACKS OF CEMENT PER CUBIC YARD. CONCRETE USED IN MANHOLE BASES SHALL CONFORM TO THE REQUIREMENTS OF "CONCRETE FOR CONCRETE PAVEMENT CONSTRUCTION AS SPECIFIED IN THE CITY STANDARD PAVING SPECIFICATIONS USING CITY CONCRETE PAVEMENT MIX WITHOUT AIR ENTERING ADMIXTURE. MORTAR SHALL BE PLACED AROUND THE MANHOLE RING AS SHOWN ON THE DRAWINGS WHEN MANHOLES ARE CONSTRUCTED IN UNPAVED AREAS. MANHOLES CONSTRUCTED WHERE PIPE SIZES ARE SMALLER THAN 24" SHALL HAVE AN INSIDE DIAMETER OF 4'. MANHOLES CONSTRUCTED WHERE PIPE SIZES ARE 24" OR LARGER SHALL HAVE AN INSIDE DIAMETER OF 5'. COMPLETED MANHOLE SHALL BE WITHOUT LEAKS AND WATER TIGHT.

PRECAST MANHOLE NOTES

11. REINFORCING STEEL SHALL BE INSTALLED IN THE MANHOLE BASES AND SHALL CONSIST OF NO. 4 BARS PLACED ON 6" CENTERS IN BOTH DIRECTIONS. THE MANHOLE BASE REINFORCEMENT SHALL BE PLACED AT LEAST 3" ABOVE THE BOTTOM OF THE MANHOLE BASE. ALL COSTS FOR FURNISHING AND INSTALLING REINFORCING STEEL SHALL BE INCLUDED IN THE UNIT PRICE BID FOR THE MANHOLE.
12. OPENINGS SHALL BE CUT INTO THE MANHOLE WALL WHEN OUTSIDE DROPS ARE CONSTRUCTED ON EXISTING MANHOLES. SUCH OPENINGS CUT INTO EXISTING MANHOLES SHALL BE AS SMALL AS PRACTICAL TO FACILITATE INSTALLING AND GROUTING THE NEW PIPE IN PLACE. WATERSTOP GASKETS SHALL BE USED WITH P.V.C. AND A.B.S. COMPOSITE PIPE. THE NEW PIPE SHALL BE GROUTED INTO THE OPENING USING AN APPROVED NONSHRINK GROUT FOR THE FULL MANHOLE WALL THICKNESS. THE EXTERIOR OF THE COMPLETED CONNECTION SHALL BE SEALED WITH AN APPROVED BITUMINOUS COATING SUCH THAT THE CONNECTION WILL BE WATER TIGHT. FLOOR OF MANHOLE SHALL BE MODIFIED TO FORM NEW FLOW CHANNEL FOR THE NEW CONNECTION AS INDICATED BY THE DRAWING. THIS WORK, INCLUDING MODIFICATION OF MANHOLE FLOOR, SHALL BE PAID FOR AT THE UNIT PRICE BID FOR OUTSIDE DROP STACK CONSTRUCTED ON EXISTING MANHOLE.
13. THE FLOORS OF ALL MANHOLES SHALL BE SHAPED WITH FLOW CHANNELS SUCH THAT THE MANHOLES WILL BE SELF CLEANING AND FREE OF AREAS WHERE SOLIDS COULD BE DEPOSITED AS SEWAGE FLOWS THROUGH THE MANHOLE FROM ALL INLET PIPES TO THE OUTLET PIPE. FLOW CHANNELS SHALL BE FORMED TO MATCH THE BOTTOM HALVES OF THE INFLOWING PIPES AND THE OUTFLOWING PIPE AS SHOWN BY THE DRAWINGS EXCEPT FOR INSIDE DROP MANHOLES. FLOW CHANNELS FOR INSIDE DROP MANHOLES SHALL BE CONSTRUCTED AS INDICATED BY THE DRAWING. MANHOLE FLOORS SHALL HAVE SLOPES OF 3 INCHES PER FOOT IN THE AREAS OUTSIDE OF THE FLOW CHANNELS SLOPED TOWARD THE FLOW CHANNELS. PIPES LAID THROUGH MANHOLES SHALL HAVE THE TOP HALF REMOVED TO NEAT LINES FOR THE FULL INSIDE DIAMETER OF THE MANHOLE. MANHOLE FLOORS SHALL THEN BE SHAPED AROUND THE BOTTOM HALF OF THE PIPE WHICH FORMS THE FLOW CHANNEL.
14. PIPES INSTALLED WITHIN THE EXCAVATION MADE FOR THE MANHOLE SHALL BE CRADLED WITH CONCRETE TO THE LIMITS OF THE MANHOLE EXCAVATION. WHEN CLAY PIPE IS USED, THE CRADLE SHALL EXTEND TO THE FIRST JOINT OUTSIDE THE MANHOLE. THE CRADLE SHALL BE TERMINATED AT THE CLAY PIPE JOINT IN A MANNER WHICH WILL MAINTAIN THE FLEXIBILITY OF THE JOINT. COST OF CRADLE WITHIN MANHOLE EXCAVATION OR TO CLAY PIPE JOINTS ADJACENT TO MANHOLE SHALL BE INCLUDED IN THE UNIT PRICE BID FOR THE MANHOLE.
15. MANHOLE COVER CASTINGS AND MANHOLE FRAME CASTINGS SHALL CONFORM TO THE REQUIREMENTS AS INDICATED IN THE STANDARD SPECIFICATIONS AND AS SHOWN IN THE STANDARD DETAIL DRAWING.
16. THE VERTICAL DROP IN INSIDE DROP MANHOLES SHALL NOT EXCEED 4' FOR INFLOWING PIPES SIZED 12" OR SMALLER AND 2' FOR INFLOWING PIPES LARGER THAN 12". THE CROWNS OF INFLOWING PIPES SHALL NEVER BE SET LOWER THAN THE CROWN OF THE OUTFLOWING PIPE.
17. STANDARD MANHOLES AND STANDARD INSIDE DROP MANHOLES SHALL BE BID AS STANDARD MANHOLES FOR THE TYPE AND DIAMETER INDICATED. OUTSIDE DROP MANHOLES SHALL BE BID AS STANDARD OUTSIDE DROP MANHOLES FOR THE TYPE AND DIAMETER INDICATED. ALL MANHOLE DIAMETERS WILL BE 4' UNLESS INDICATED OTHERWISE.
18. A BRICK MASONRY COLLAR SHALL BE INSTALLED BETWEEN THE CAST IRON FRAME AND THE CONCENTRIC CONE. THE COLLAR WILL HAVE 8" WALLS AND A VERTICAL HEIGHT OF 6" MINIMUM AND 18" MAXIMUM. A 1" COAT OF MORTAR WILL BE PLASTERED ON THE OUTSIDE OF THE COLLAR.

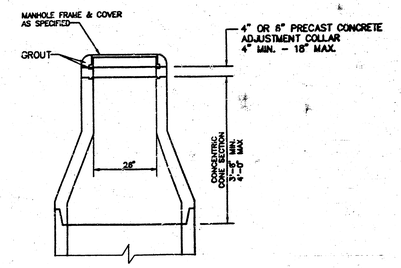

ALTERNATE CONSTRUCTION IN UNPAVED AREAS

AS BUILT 11-29-93

MANHOLE DETAILS

Design: GA
Drawn by: AM
Checked by: GA
Date: 6/92
Job no.: MHDTLS
Sheet: 6 of 6

MID-KANSAS ENGINEERING CONSULTANTS INC.
3500 NORTH ROCK ROAD
BUILDING #800
WICHITA, KANSAS 67226
(316) 636-5566

MKEC PROJ. NO. 93-28-100-D