NORTH WICHITA INDUSTRIAL PARK
STORM DRAINAGE IMPROVEMENTS

FOR THE CITY OF:

WICHITA, KANSAS

PART I & PART III CONSTRUCTION

WICHITA
★ KANSAS ★
ALL-AMERICA CITY

INDEX TO DRAWINGS

Van Doren · Haxard · Stallings Schnacke
Engineers · Architects
Topeka, Kansas

job no. 068-46-AO

EVERETT R. WATSON LICENSED 603 KANSAS PROFESSIONAL ENGINEER

CARROLL L. NELSON LICENSED 2700 KANSAS PROFESSIONAL ENGINEER

PRINTED FEB 26 1970 VAN DOREN-HAXARD-STALLINGS-SCHNACKE

NORTH WICHITA INDUSTRIAL PARK STORM DRAINAGE
CITY OF WICHITA, KANSAS
LINE CD

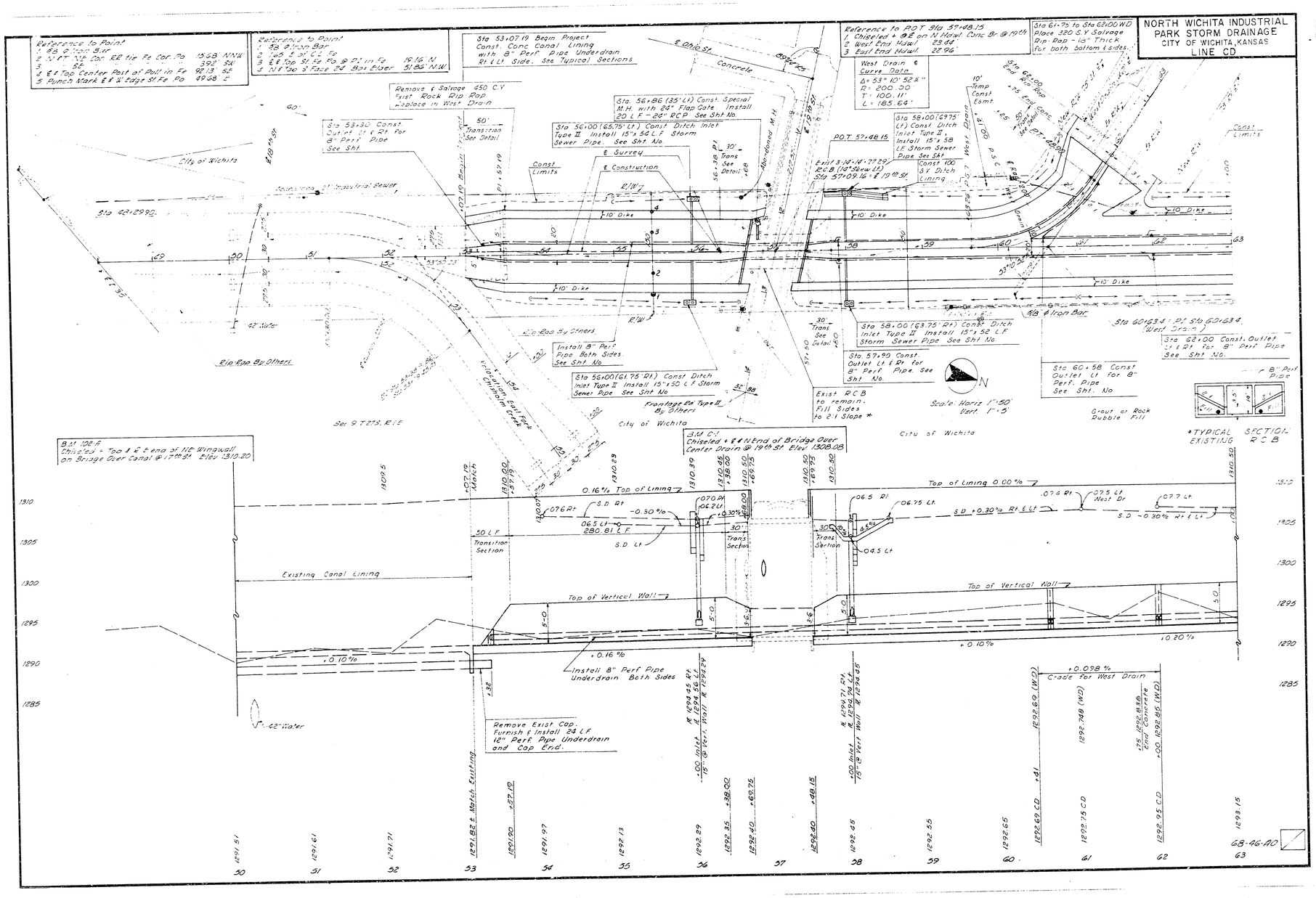

NORTH WICHITA INDUSTRIAL PARK STORM DRAINAGE
CITY OF WICHITA, KANSAS
LINE CD

Reference to P.I. Sta 70+87.79
1. Conc N&T (North nail of two)
2. Chiseled + ℄ ℄ t end 3" Hand Rail of Bridge 33.10' SE
3. " " " " N " " " " 35.78' NW
4. " " W " S " " " " 41.95' SW

Reference to P.I. Sta 76+45.57
1. 5/8" Iron Bar
2. ℄ @ 3.0' Above Grade Fr. Po. in P.I. of Fc 59.41' SE
3. ℄ ℄ Base 3" Pipe Cap in Concrete 89.22' SSE
4. Top ℄ N.E. Cor. Conc. Found. (Level Dist) 59.26' S

Sta 66+00 (61.75' Lt.) Const. Ditch Inlet Type II, Install 30" x 50 L.F. Storm Sewer Pipe. See Sht. No.

Sta 70+93 Existing 3-12'x8'x69.4' R.C.B. to Remain. Plug Inlets. Overlay Bridge Surface. Improve Headwalls. See Sht.

Const. 2-Section Curb Inlets at 4 locations (2-Lt. & 2-Rt.) on 21st St. Install 15" x L.F. Storm Sewer Pipe thru R.C.B. walls at location, with Flapgate. See Sht. No.

Remove M.H. Top. Plug Outlets with Conc. Backfill & Compact.

Sta. 72+79.07 Const. 3-Span Bridge 24' Roadway. Remove existing bridge after traffic has been re-routed. See Sht. Nos.

Sta 76+50 (37.75' Lt.) Const. Ditch Inlet Type II, Install 18" x 36 L.F. Storm Sewer Pipe. See Sht. No.

Sta 77+25 (+75 Rt.) Const. Ditch Inlet Type II, Install 18" x 30 L.F. Storm Sewer Pipe. See Sht. No.

Sta 75+00 Const. Outlets Lt. & Rt. for 8" Perf. Pipe. See Sht. No.

Sta 73+60 (29.75' Rt.) Const. Ditch Inlet Type II, Install 24" x 18 L.F. Storm Sewer Pipe. Remove 15 L.F. of 24" C.M.P. & Weld. See Sht. No.

Sta 72+00 Const. Outlets Lt. & Rt. for 8" Perf. Pipe. See Sht. No.

Regrade Manhole to Fit slope.

Sta 65+70 (63.75' Rt.) Const. Ditch Inlet Type II, Install 18" x 52 L.F. Storm Sewer Pipe. See Sht. No.

Sta 66+10 Const. Outlets Lt. & Rt. for 8" Perf. Pipe. See Sht. No.

NOTE: Contractor to provide 2:1 bevel end pipe extensions into conc. canal lining for all existing 4", 6", 8" and 12" drains.

Scale: Horiz. 1"=50' Vert. 1"=5'

Curve Data
P.I. Sta 70+87.79
Δ: 20°13'30"
T: 165.98'
L: 324.72'
R: 636.62'
D: 9°00'00"

Curve Data
P.I. Sta 76+45.57
Δ: 32°46'53"
T: 146.51'
L: 284.99'
R: 498.82'
D: 11°30'00"

B.M.-City Std. Cor. Planter around Derby Sign N. side 21st St. 100'± W of ℄ of drain El. 1309.65

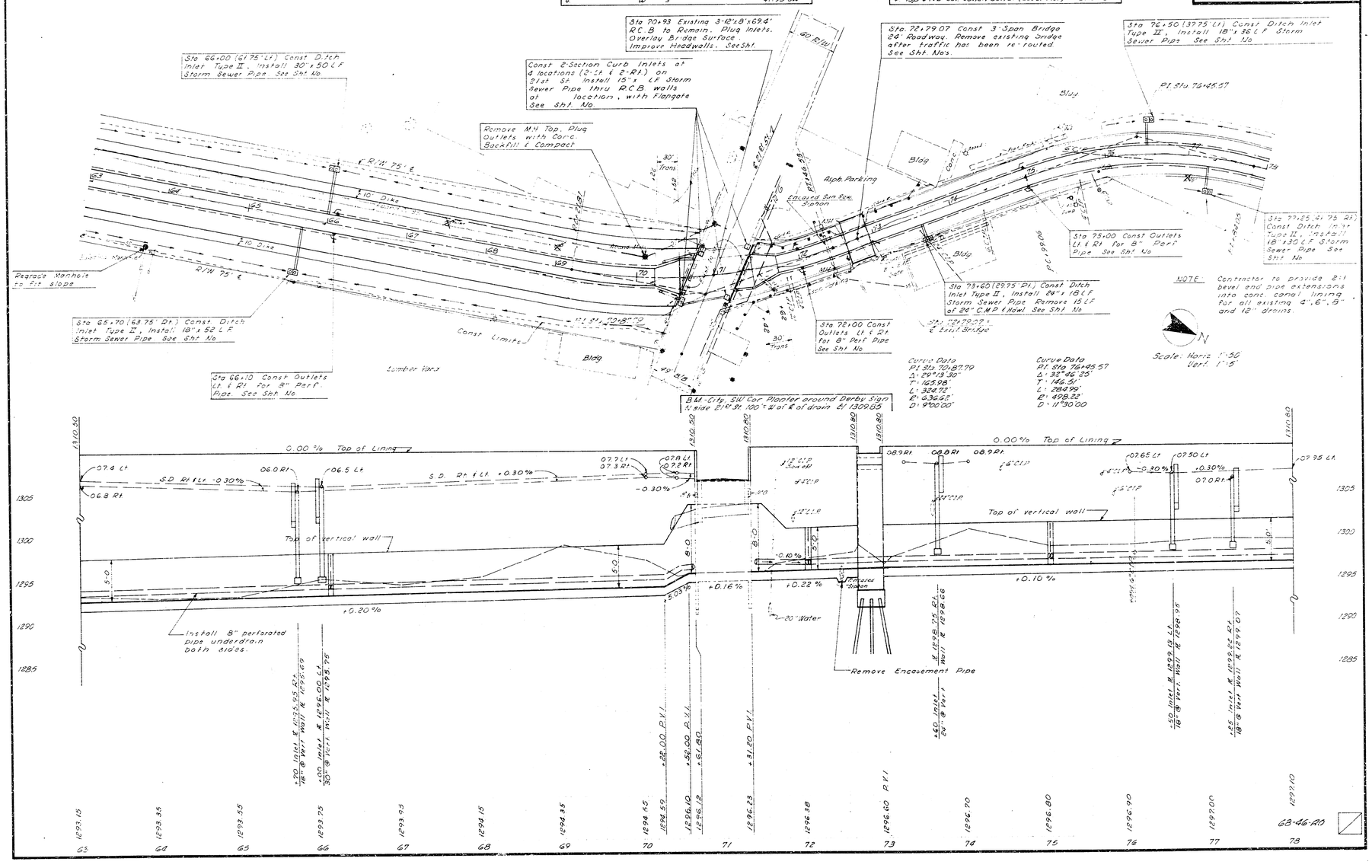

NORTH WICHITA INDUSTRIAL
PARK STORM DRAINAGE
CITY OF WICHITA, KANSAS
LINE CD

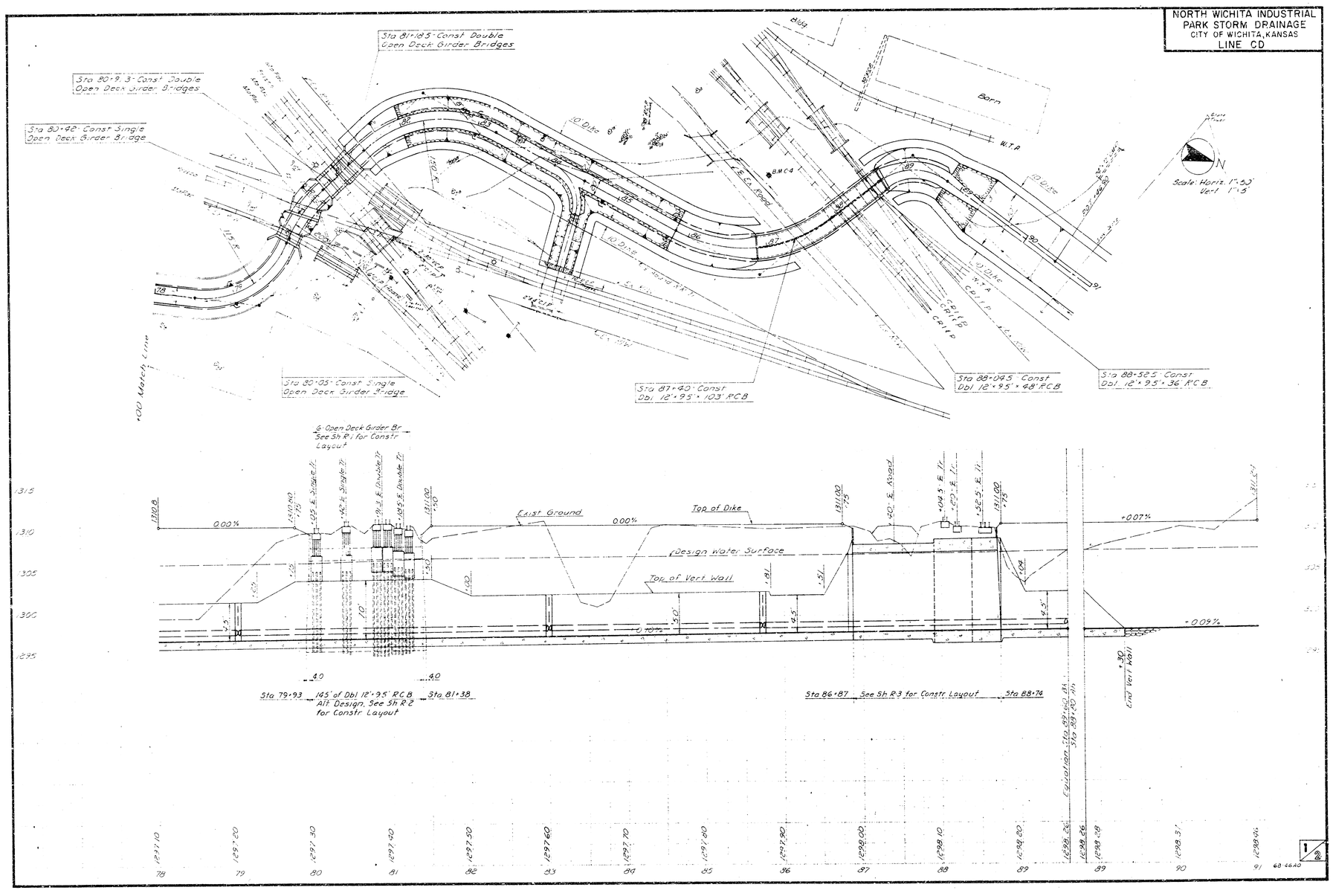

References Not Available For
POT Sta 97+49.15
PT Sta 93+59.50
PO: Sta 95+18.00

Ref to PI Sta 97+41.70
1 5/8" ø Iron Bar ø ℄
2 N&T in top handrail of R.R. br NNE 9.26'
3 - - - - - ℄ SW Cor RR Br handrail NE 88.23'
4 Top ℄ S.W. Cor of W wheel stop on Wording ENE 58.27'

Ref to PI Sta 99+78.61
1 5/8" Iron Bar ø ℄
2 N&T in St face PP NNE 47.74'
3 - - - - 5 - 10 Elm NE 37.35'
4 - - - 11 12 ℄ 39.44'

Ref to Ctr Co. Sec 4
1 3/4" Iron Bar
2 Top ℄ Near face of 911 Derby Mkr. NE 27.09'
3 N&T NE Cor br handrail post WNW 52.22'
4 - - St SW 57.17'

NORTH WICHITA INDUSTRIAL
PARK STORM DRAINAGE
CITY OF WICHITA, KANSAS
LINE CD

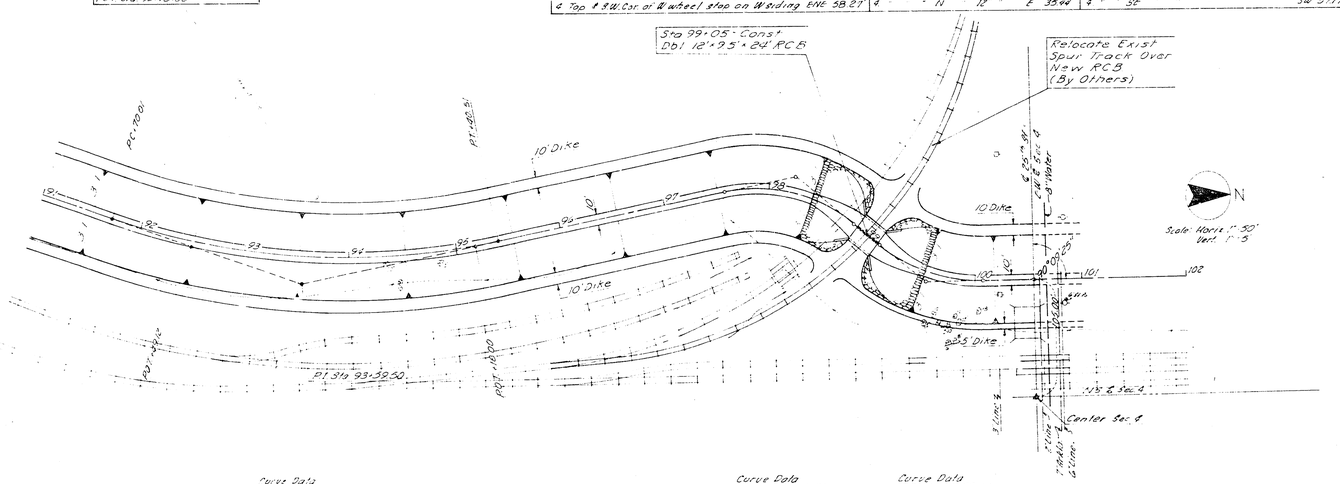

Curve Data
P.I. Sta 93+59.50
Δ: 28°38.23'
T: 189.49'
L: 370.50'
R: 769.20'
D: 8°20.00'

Curve Data
P.I. Sta 97+41.70
Δ: 30°14.25'
T: 54.00'
L: 105.49'
R: 199.87'
D: 28°60.00'

Curve Data
P.I. Sta 99+78.61
Δ: 19°43.40'
T: 34.95'
L: 68.82'
R: 199.87'
D: 28°60.00'

B.M. No. C.S.: 60d Spk Stp. Sand of ℄ Pier
Upn. Wooden Bridge on 53rd St. W of
Frisco Tracks on Center Dr. Elev. 1310.66

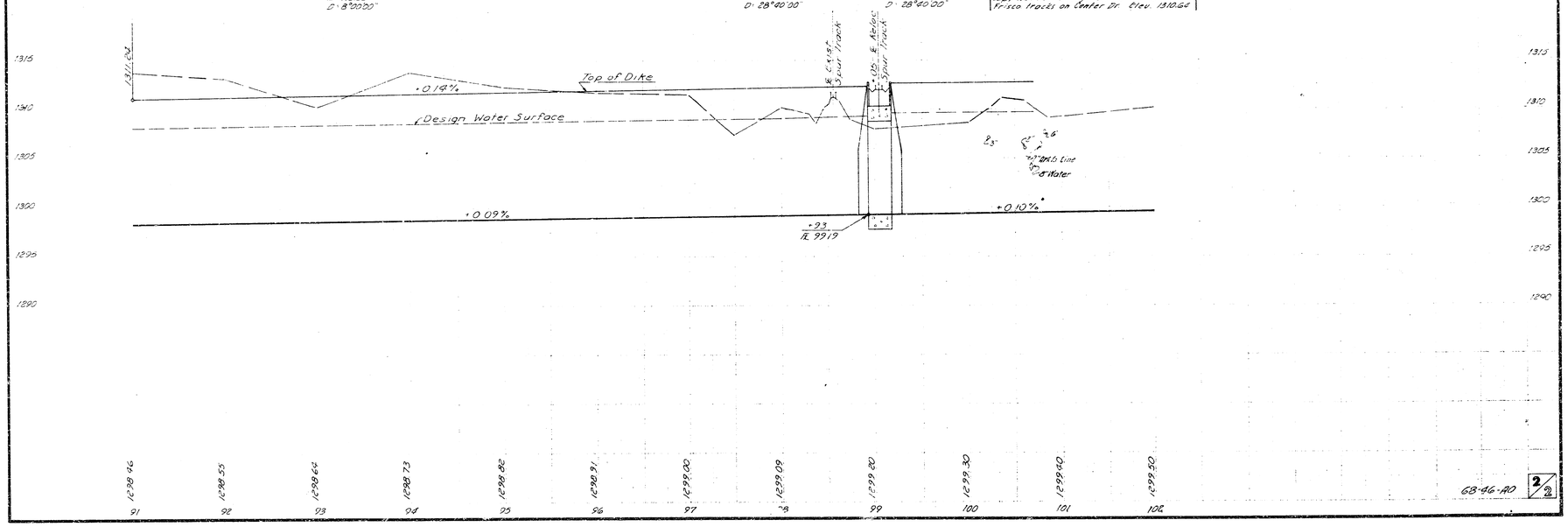

68-46-AD

2/2

NORTH WICHITA INDUSTRIAL
PARK STORM DRAINAGE
WICHITA URBAN RENEWAL AGENCY
LINE CD

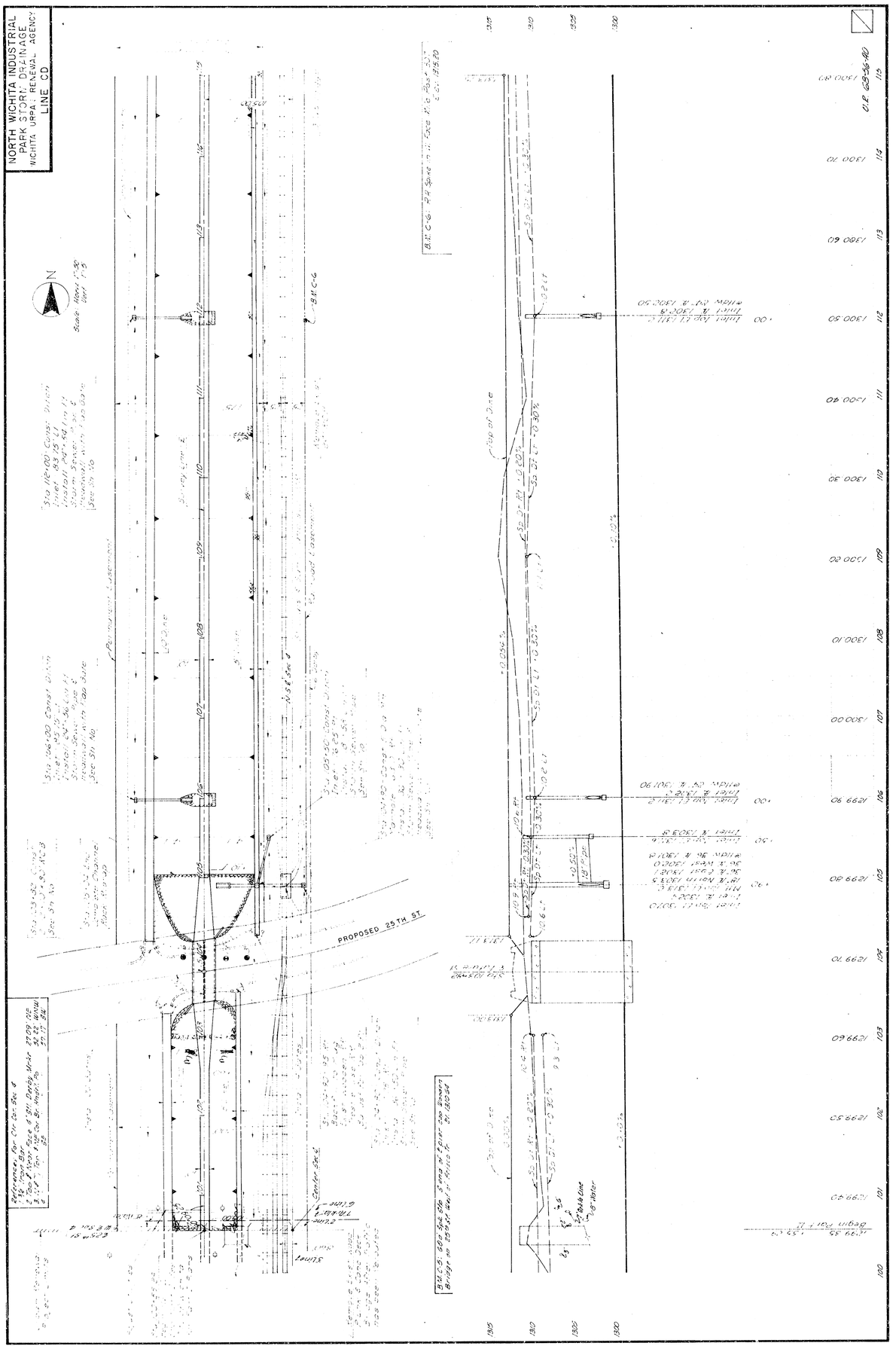
PROPOSED 25TH ST
Top of Dike
Center Stake
Survey Line
Sta 106+00 Const Dikes
Sta 103+50 Const Dikes
Sta 101+00 Const Dikes
Sta 99+50 Const Dikes
Sta 98+00 Const Dikes
Sta 96+50 Const Dikes
Sta 95+00 Const Dikes
Sta 93+50 Const Dikes
Sta 92+00 Const Dikes
Sta 90+50 Const Dikes
Sta 89+00 Const Dikes
Sta 87+50 Const Dikes
Sta 86+00 Const Dikes
Sta 84+50 Const Dikes
Sta 83+00 Const Dikes
Sta 81+50 Const Dikes
Sta 80+00 Const Dikes
Sta 78+50 Const Dikes
Sta 77+00 Const Dikes
Sta 75+50 Const Dikes
Sta 74+00 Const Dikes
Sta 72+50 Const Dikes
Sta 71+00 Const Dikes
Sta 69+50 Const Dikes
Sta 68+00 Const Dikes
Sta 66+50 Const Dikes
Sta 65+00 Const Dikes
Sta 63+50 Const Dikes
Sta 62+00 Const Dikes
Sta 60+50 Const Dikes
Sta 59+00 Const Dikes
Sta 57+50 Const Dikes
Sta 56+00 Const Dikes
Sta 54+50 Const Dikes
Sta 53+00 Const Dikes
Sta 51+50 Const Dikes
Sta 50+00 Const Dikes
Sta 48+50 Const Dikes
Sta 47+00 Const Dikes
Sta 45+50 Const Dikes
Sta 44+00 Const Dikes
Sta 42+50 Const Dikes
Sta 41+00 Const Dikes
Sta 39+50 Const Dikes
Sta 38+00 Const Dikes
Sta 36+50 Const Dikes
Sta 35+00 Const Dikes
Sta 33+50 Const Dikes
Sta 32+00 Const Dikes
Sta 30+50 Const Dikes
Sta 29+00 Const Dikes
Sta 27+50 Const Dikes
Sta 26+00 Const Dikes
Sta 24+50 Const Dikes
Sta 23+00 Const Dikes
Sta 21+50 Const Dikes
Sta 20+00 Const Dikes
Sta 18+50 Const Dikes
Sta 17+00 Const Dikes
Sta 15+50 Const Dikes
Sta 14+00 Const Dikes
Sta 12+50 Const Dikes
Sta 11+00 Const Dikes
Sta 9+50 Const Dikes
Sta 8+00 Const Dikes
Sta 6+50 Const Dikes
Sta 5+00 Const Dikes
Sta 3+50 Const Dikes
Sta 2+00 Const Dikes
Sta 0+50 Const Dikes
Sta 0+00 Const Dikes
Sta 13+32 Const Dikes
Sta 13+32 Const Dikes
Sta 10+00 Const Dikes
Sta 8+50 Const Dikes
Sta 7+00 Const Dikes
Sta 5+50 Const Dikes
Sta 4+00 Const Dikes
Sta 2+50 Const Dikes
Sta 1

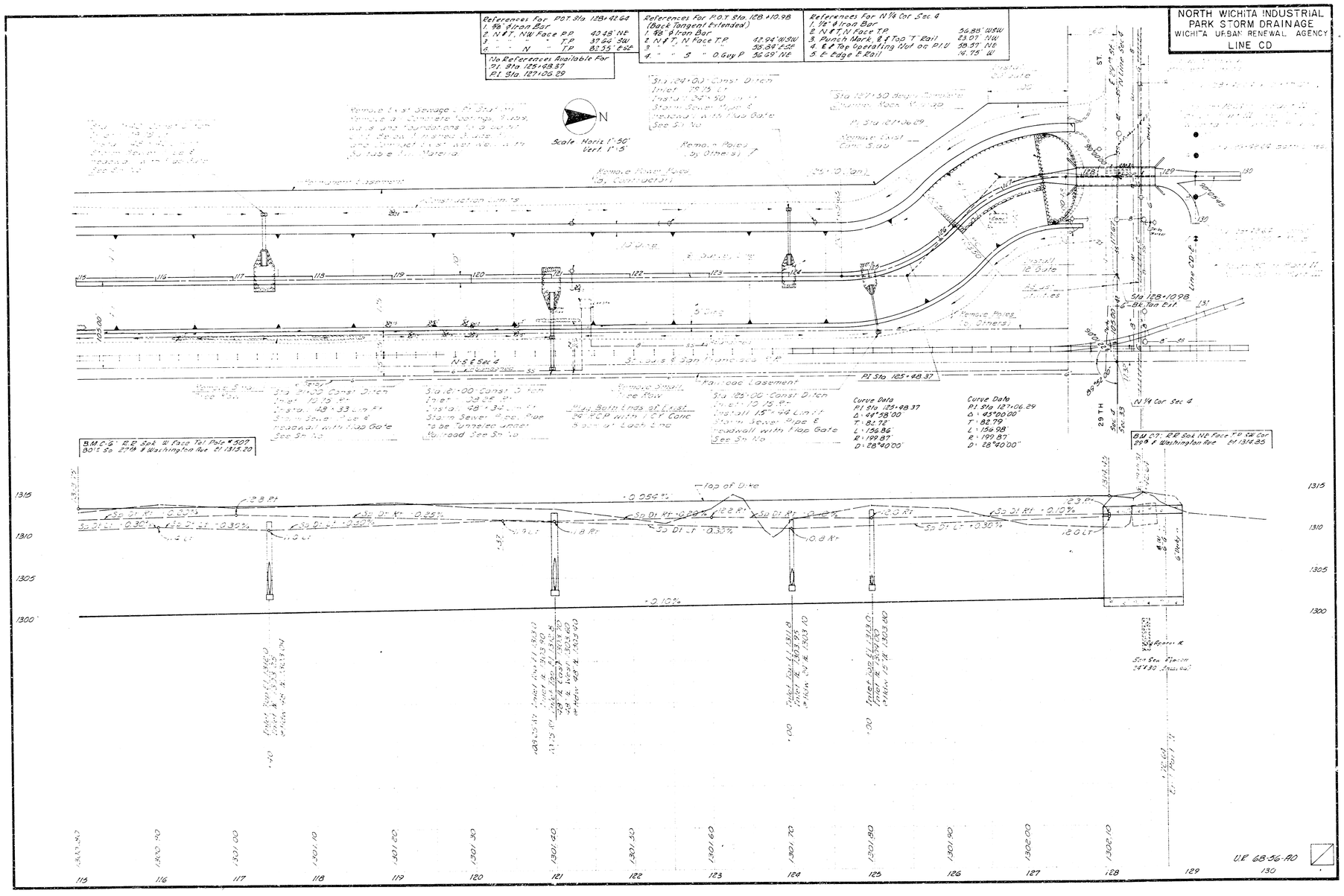
NORTH WICHITA INDUSTRIAL
PARK STORM DRAINAGE
WICHITA URBAN RENEWAL AGENCY
LINE CD
References For P.O.T. Sta 128+42.64
1. 5/8" ø Iron Bar
2. N & T, N W Face P.P. 40.48' NE
3. " " " T.P. 37.64' SW
4. " N " T.P. 83.35' ESE
No References Available For
P.I. Sta 125+48.37
P.I. Sta 127+06.29
References For P.O.T. Sta 128+10.98
(Back Tangent Extended)
1. 5/8" ø Iron Bar
2. N & T, N Face T.P. 43.94' WSW
3. " " " " 58.84' ESE
4. " " S " O.Guy P. 50.69' NE
References For N 1/4 Cor Sec 4
1. 1/2" ø Iron Bar
2. N & T, N Face T.P. 36.88' WSW
3. Punch Mark, E & Top "T" Rail 23.07' NW
4. E & Top Spiraling Nut on P.I.U. 39.37' NE
5. E Edge E Rail 14.75' W
N
Scale Horiz 1" 50'
Vert 1" 5'
Remove Poles (By Others)
Remove Poles (By Others)
Remove Poles (By Others)

NORTH WICHITA INDUSTRIAL PARK STORM DRAINAGE
CITY OF WICHITA, KANSAS
LINE CD

References for P.O.T. Sta 128+42.64
1. 5/8" ø Iron Bar
2. N&T, N.W. Face PP 40.48' NE
3. " " " TP 37.64' SW
4. " " N " " 82.35' E&E

References for P.O.T. Sta 128+10.98 (Back Tangent Extended)
1. 5/8" ø Iron Bar
2. N&T, N Face TP 42.94' W&W
3. " " S " O.Guy Po. 36.69' NE
4. " " " " 35.84' E&E

References for N¼ Cor. Sec 4
1. 1½" ø Iron Bar
2. N&T, N Face TP 36.88' W&W
3. Rock M.K. E&E Top T. Rail 23.27' NW
4. E&E Top Cortag. Nut on P.U. 58.37' NE
5. E&E Edge E Rail 14.75' W

References to P.I. Sta. 131+82.53
1. 5/8" ø Iron Bar
2. N&T, W Face Telgrph. Pole 134.38' S&E
3. " " N " " 72.65' NE

No References Available For P.I. Sta. 133+33.06

References for P.O.T. Sta. 136+03.88
1. 60d Spike
2. N&T, S Face Transf. Pole 61.51' E
3. E&E Hd. N Bolt on W 7/8" CMP 62.35' NW
4. E&E Top N Edge Sl. Fe. Po. 78.25' SW

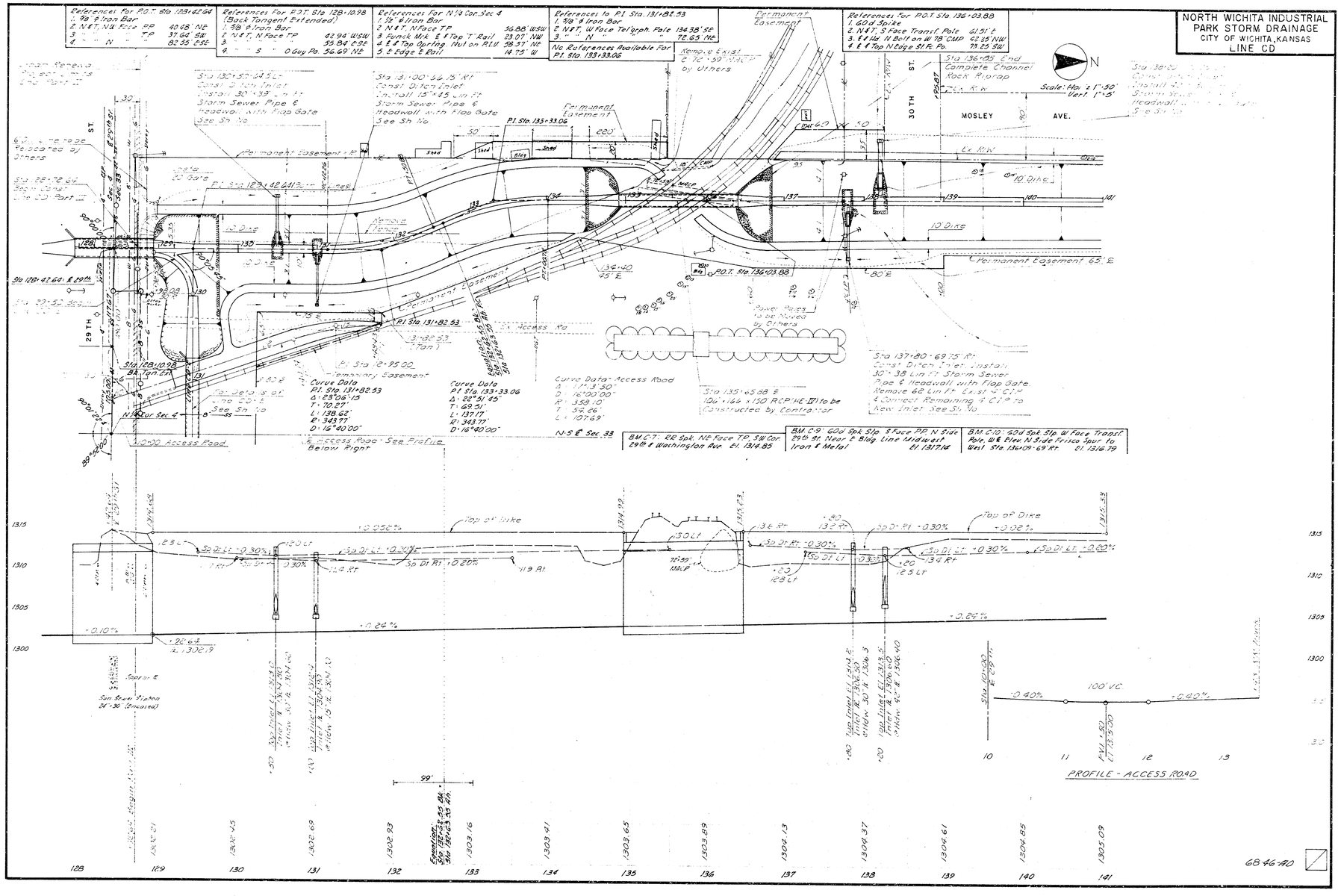

NORTH WICHITA INDUSTRIAL
PARK STORM DRAINAGE
CITY OF WICHITA, KANSAS
LINE CD

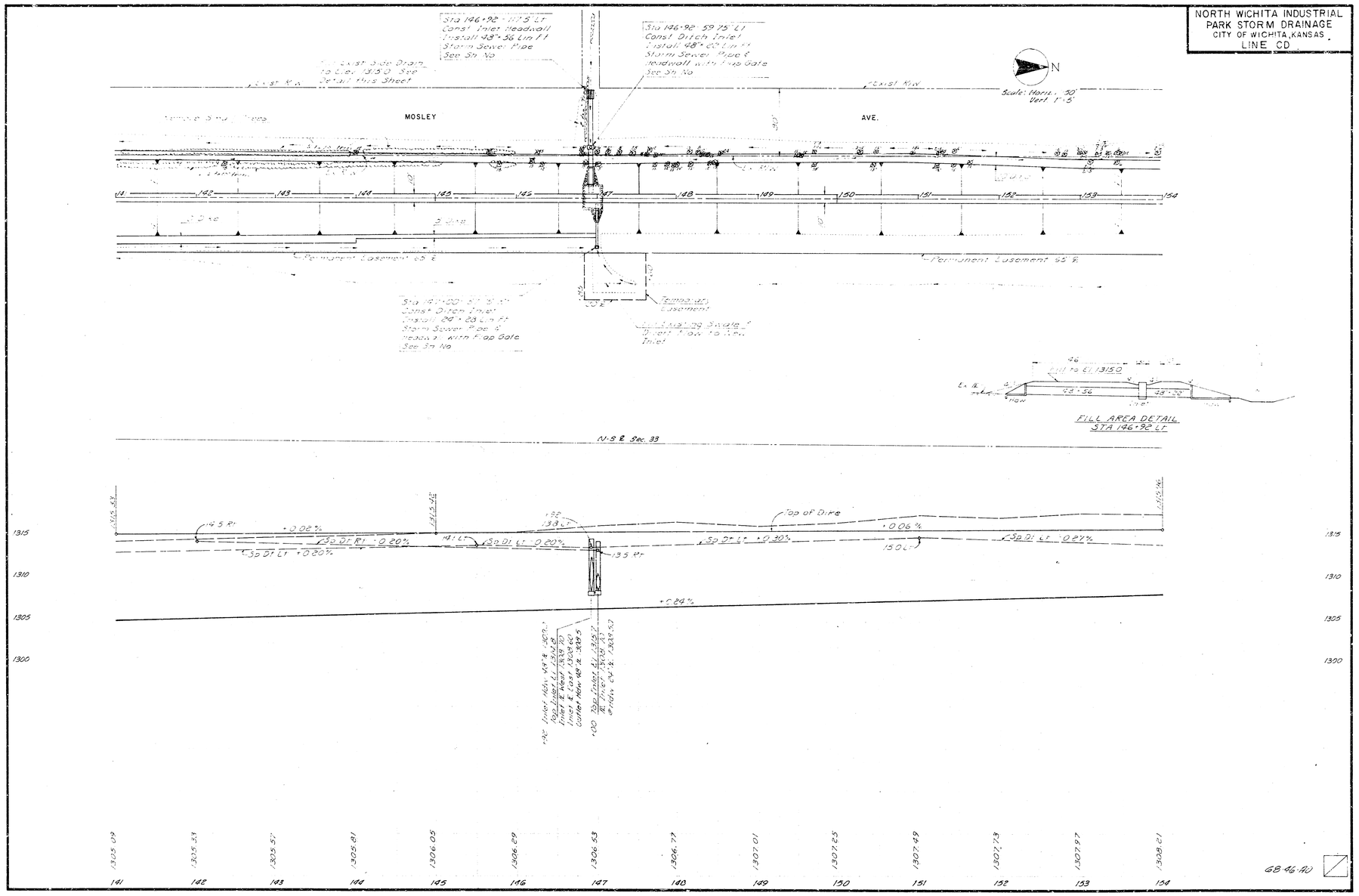

68-46-90

NORTH WICHITA INDUSTRIAL
PARK STORM DRAINAGE
CITY OF WICHITA, KANSAS
LINE CD

References for P.I. Sta 154+97.82
1. 5/8" Iron Bar 1' Below Grade
2. N.E.T. W. Face P.P. 78.68' NE
3. Extreme N end Bldg Bolt on 2" H. Post W. of Fence Cor 75.40' N
4. E. & W. end Top Bolt S. Face & Gate Po 98.89' NW

References for P.I. Sta 156+46.72
1. 5/8" Iron Bar
2. E. & Top, S.W. End Po 17.81' E
3. N.E.T. W. Face Light Pole 33.40' NE
4. Top & S.E. Edge S.W. Gate Po 59.50' NW

References for P.I. Sta 164+33.00
1. 5/8" Iron Bar
2. N.E.T. S. Face P.P. 69.92' W
3. W. S/In Light 50.90' SE
4. Chiseled "+" W. End 36" RCP 21.32' E

References for P.I. Sta 165+95.45
1. 5/8" Iron Bar
2. E. & Top Switch Stand 64.24' NE
3. 29.81' NW
4. N.E.T. SW Face O. Guy Pole 37.22' SE

References for P.O.T. Sta 167+05.64
1. 5/8" Iron Bar @ E. & T.W. (Alley)
2. N.E.T. N. Face T. Pole 7.81' E
3. 13.7' S. of S. Edge of House West

N
Scale: Horiz 1"=30'
Vert 1"=5

MOSLEY AVE.
MEADE AVE.
ST. FRANCIS AVE.
33 RD ST.
SANTA FE
ST. FRANCIS

Curve Data
P.I. Sta 154+97.82
Δ = 59°51'45"
T = 32.54'
L = 62.69'
R = 60.00'
D = 95°30'00"

BM C-12: Cut Sq. Sq. Stp. N. Face PP. N. Side 33rd St. W. Side Frisco R.R. El. 1313.62

BM C11: Chiseled □ NE Cor Conc. Valve Box - 38' Lt. Sta 159+85 El. 1316.93

Gravel Parking

Temporary Easement

Permanent Easement

Conc Collar

Ex. Ground

PROFILE - INTERCEPTOR DITCH

68-46-40

NORTH WICHITA INDUSTRIAL
PARK STORM DRAINAGE
CITY OF WICHITA, KANSAS
LINE CD-E

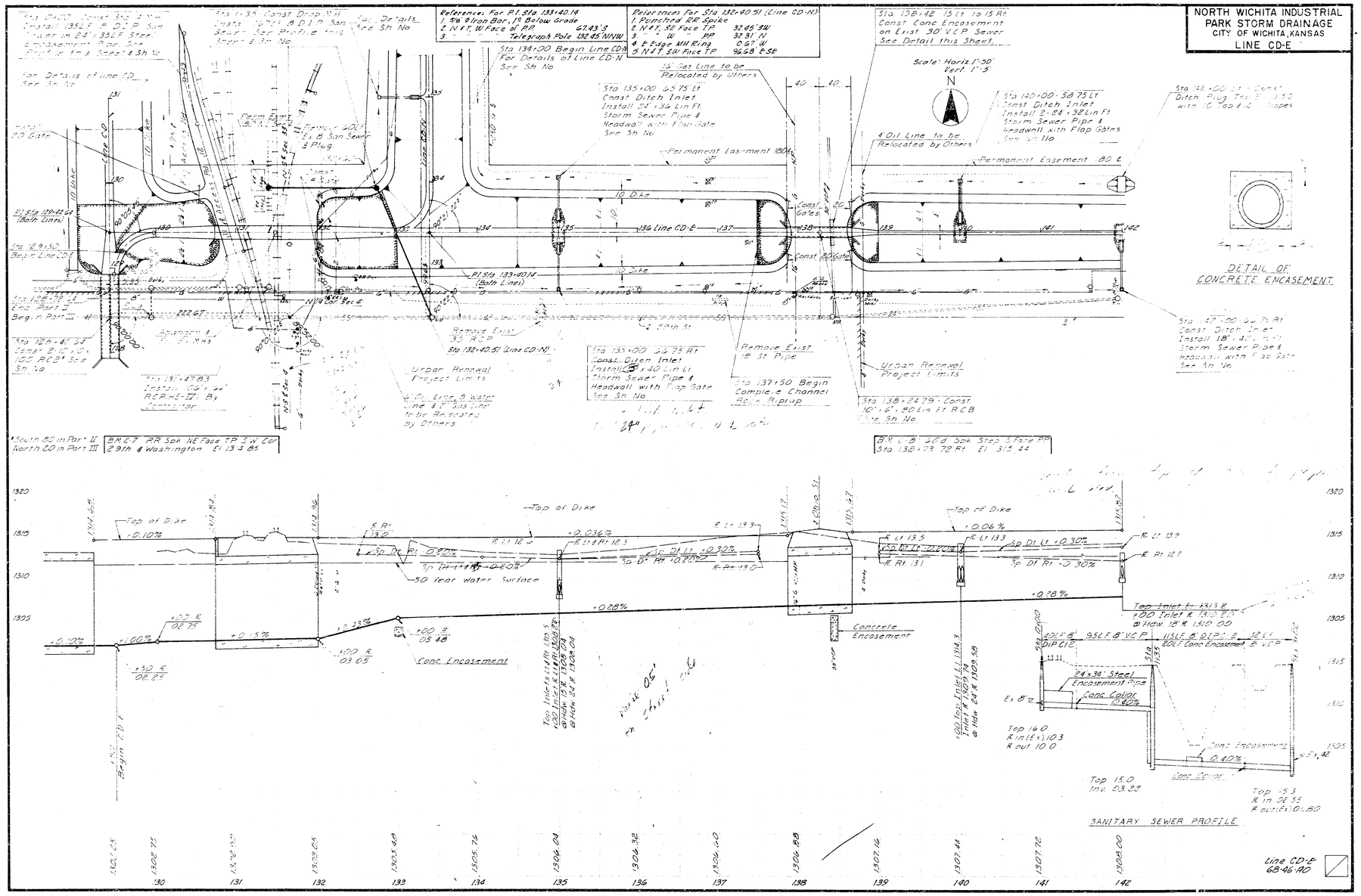

NORTH WICHITA INDUSTRIAL
PARK STORM DRAINAGE
CITY OF WICHITA, KANSAS
LINE CD-E

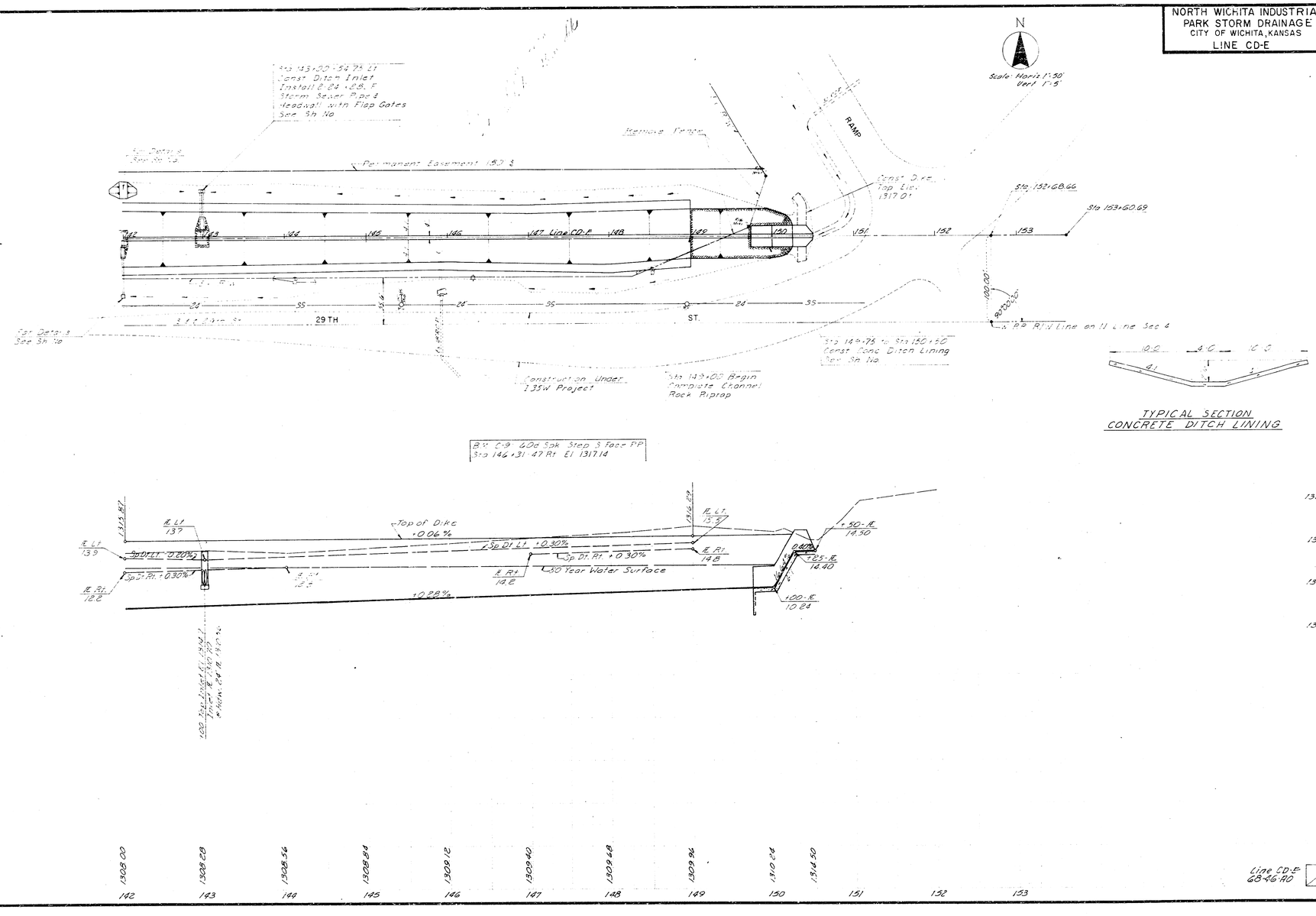

NORTH WICHITA INDUSTRIAL
PARK STORM DRAINAGE
CITY OF WICHITA, KANSAS
LINE CD-N

Scale: Horiz. 1" = 50'
Vert. 1" = 5'

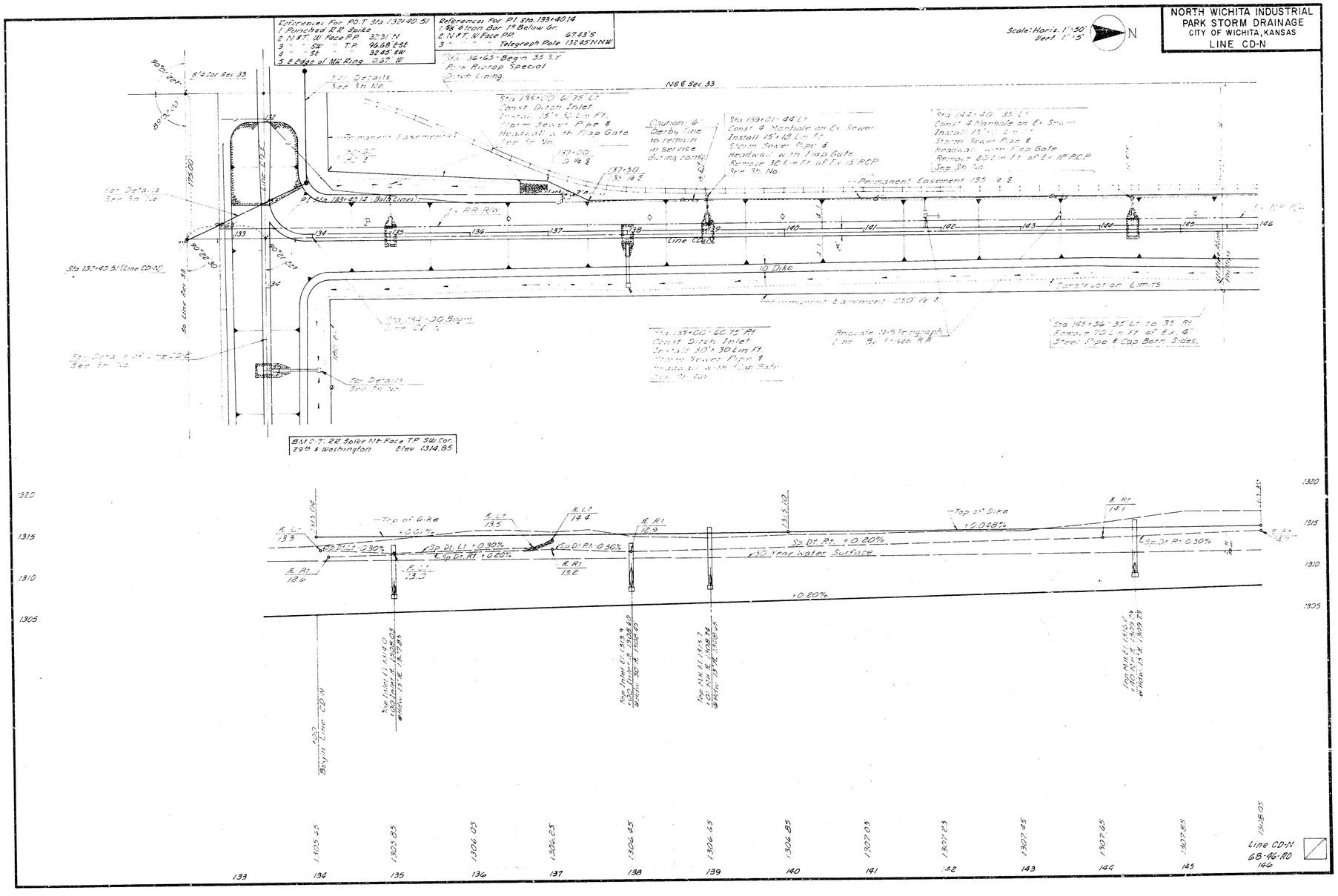

NORTH WICHITA INDUSTRIAL PARK STORM DRAINAGE
CITY OF WICHITA, KANSAS
LINE CD-N

Scale: Horiz. 1"=50
Vert. 1"=5

References for P.O.T. Sta 159+31.56
1.98 ℄ Iron Bar
2 N.F.T. in N. Face Telegraph Pole 21.75' W SW
3 " " " E " PP 30.17' N NW
4 Top of Conc. Fndn. @ SW Cor. Sec. 06.74 NNE

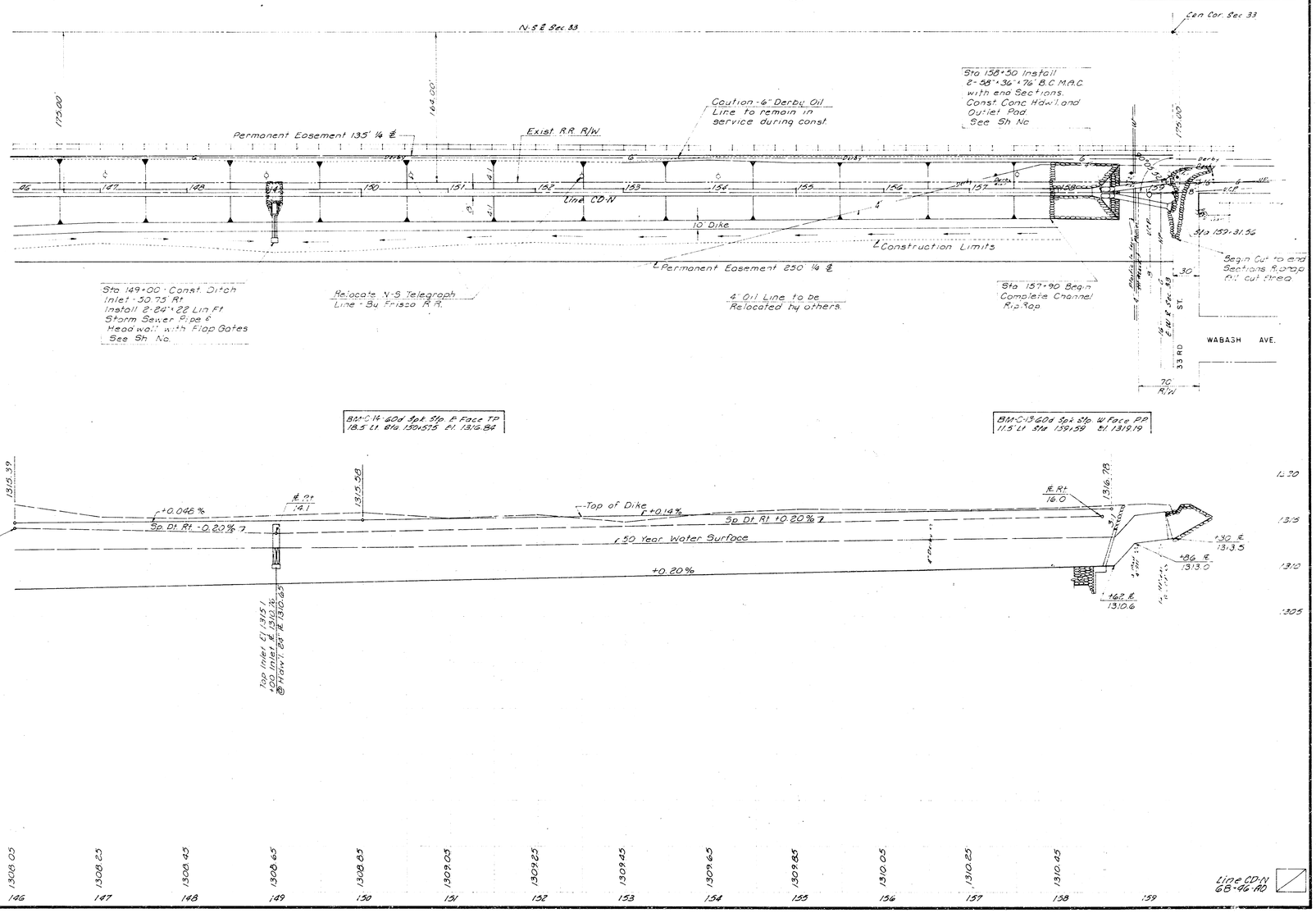

Line CD-N
GB-96-RD

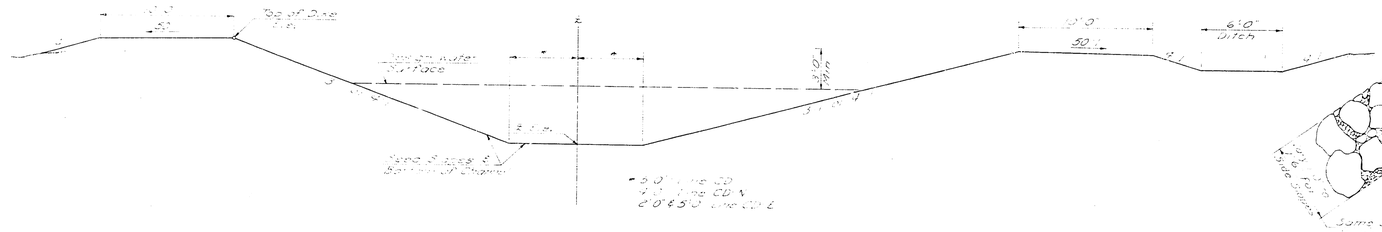

TYPICAL CHANNEL DETAILS
UNLINED BOTTOM

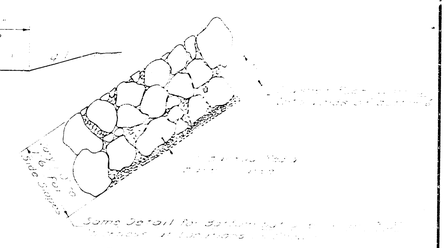

TYPICAL RIPRAP DETAILS

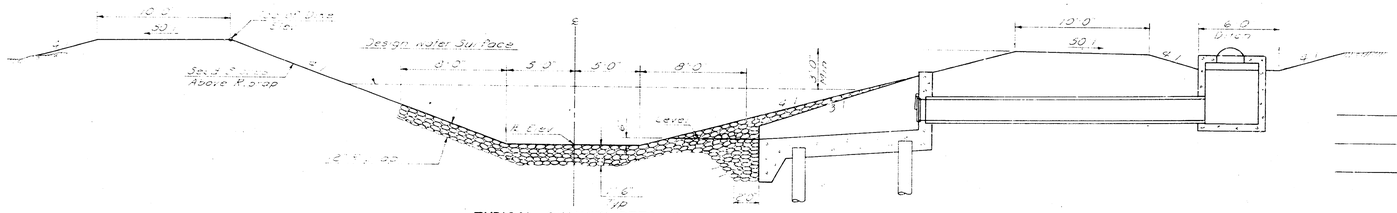

TYPICAL CHANNEL DETAILS
RIPRAP BOTTOM

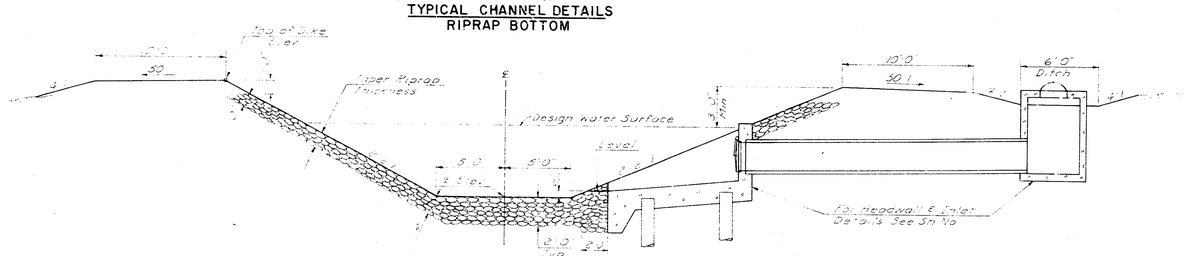

TYPICAL CHANNEL DETAILS
FULL RIPRIP

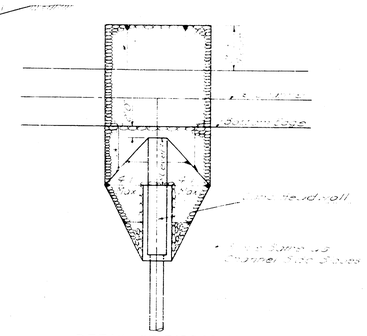

DETAIL OF RIPRAP AT
HEADWALL OUTLET

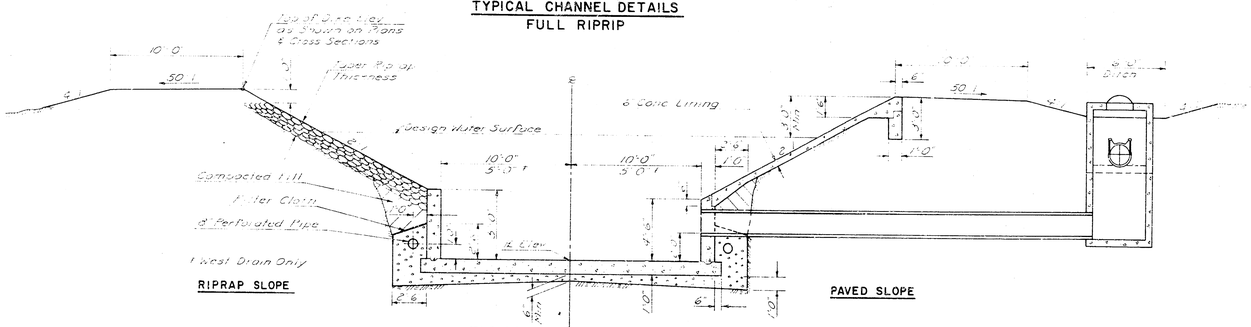

TYPICAL CHANNEL DETAILS
CONCRETE BOTTOM

DESIGN	NORTH WICHITA INDUSTRIAL PARK STORM DRAINAGE CITY OF WICHITA, KANSAS
DR BY	
CK BY	
DATE	TYPICAL CANAL LINING DETAILS
JOB NO	
	VAN DOREN-HAZARD-STALLINGS-SCHNACKE ENGINEERS-ARCHITECTS · · · TOPEKA, KANSAS
	SHEET OF

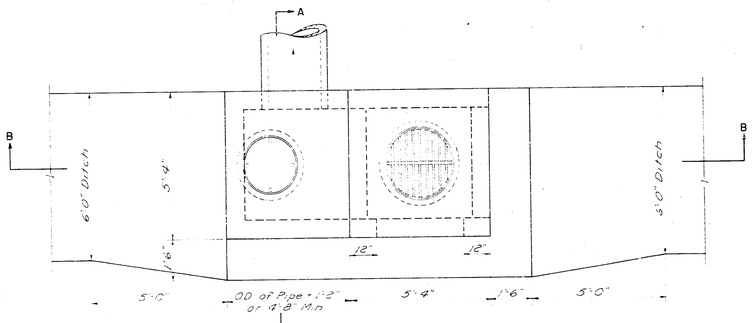

PLAN

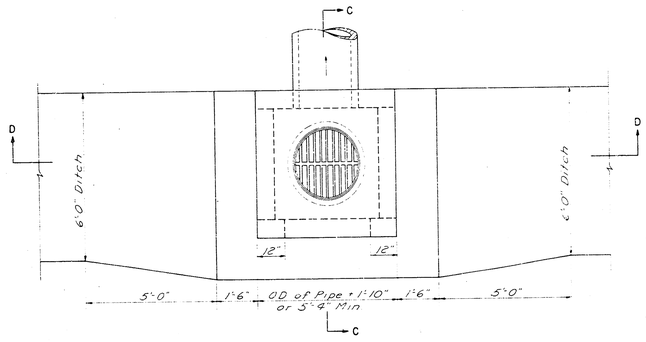

PLAN

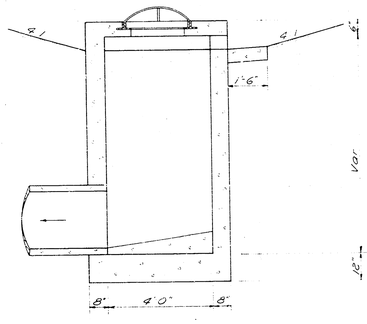

SECTION C-C

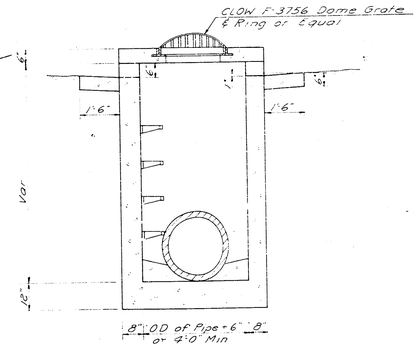

SECTION D-D

DITCH INLET TYPE I

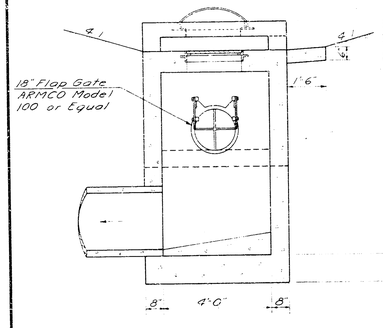

SECTION A-A

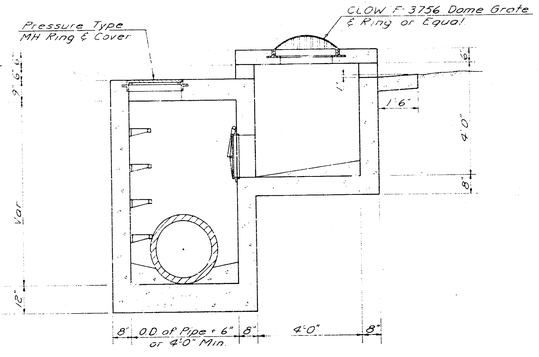

SECTION B-B

DITCH INLET TYPE II

DESIGN	NORTH WICHITA INDUSTRIAL PARK STORM DRAINAGE CITY OF WICHITA, KANSAS
DR BY	
CK BY	
DATE	DITCH INLET DETAILS
JOB NO.	
	VAN DORN-HAZARD-STALLINGS-SCHNACKE ENGINEERS ARCHITECTS · · · TOPEKA, KANSAS
	SHEET OF

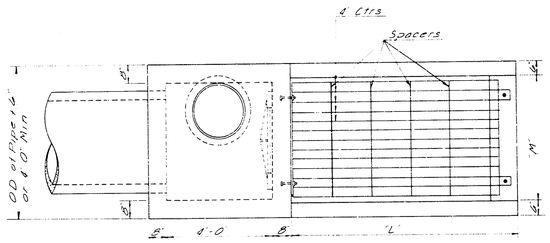

INLET HEADWALL PLAN
TYPE II

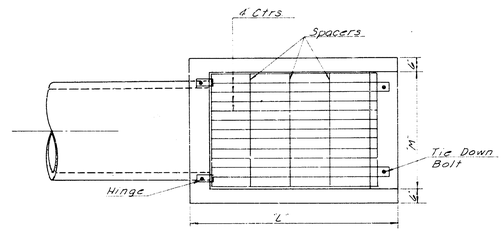

INLET HEADWALL PLAN
TYPE I

Pipe Size	'K'	'L'	'M'
36	4'-0"	7'-9"	4'-2"
48	5'-2"	9'-9"	5'-5"

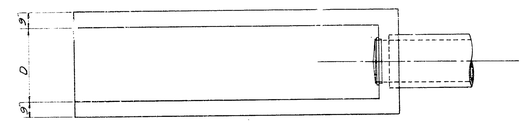

OUTLET HEADWALL PLAN

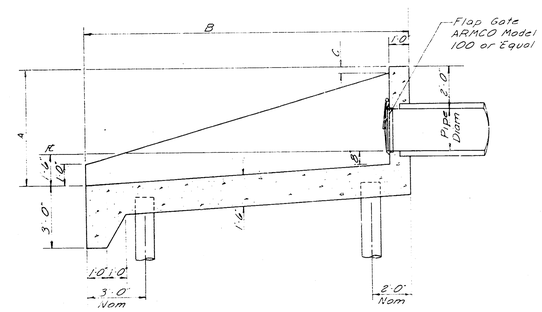

OUTLET HEADWALL SECTION

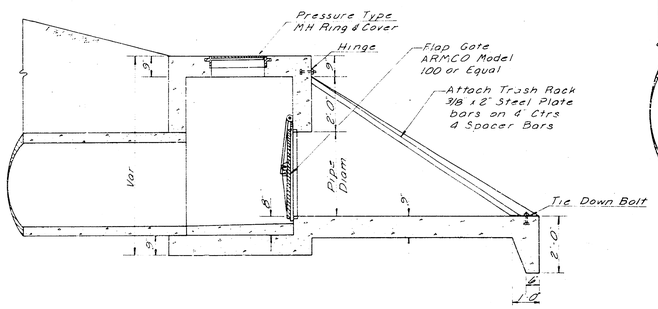

INLET HEADWALL SECTION
TYPE II

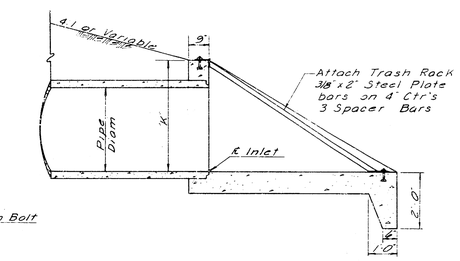

INLET HEADWALL SECTION
TYPE I

Pipe Size	A	B			C			D
		1/4:1/3:1	2/3:1/3:1	3:1/3:1	1/4:1/3:1	2/3:1/3:1	3:1/3:1	
15"	4'-9"	5'-7 1/2"	9'-4 1/2"	11'-3"	8"	5"	4"	2'-6"
18"	5'-0"	6'-0"	10'-0"	12'-0"	8"	5"	4"	3'-0"
*24"	5'-6"	6'-9"	11'-3"	13'-6"	8"	5"	4"	3'-6"
30"	6'-0"	7'-6"	12'-6"	15'-0"	8"	5"	4"	4'-0"
36"	6'-6"	8'-3"	13'-9"	16'-6"	8"	5"	4"	4'-6"
42"	7'-0"	9'-0"	15'-0"	18'-0"	8"	5"	4"	5'-0"
48"	7'-6"	9'-9"	16'-3"	19'-6"	8"	5"	4"	5'-6"
54"	8'-0"	10'-6"	17'-6"	21'-0"	8"	5"	4"	6'-0"
60"	8'-6"	11'-3"	18'-9"	22'-6"	8"	5"	4"	6'-6"

* For Dbl 24" Pipes D = 7'-0" — Allow 12" Min between pipes.

DESIGN	NORTH WICHITA INDUSTRIAL PARK STORM DRAINAGE
DR BY	
CK BY	HEADWALLS & DITCH INLET DETAILS
DATE	
JOB NO	
VAN DOREN-HAZARD-STALLINGS-SCHNACKE ENGINEERS-ARCHITECTS · · · TOPEKA, KANSAS	SHEET OF