CENTER FOR REPRODUCTIVE MEDICINE

Wichita, Kansas

Storm Sewer Engineered Project

City of Wichita Private Project No. 1301 PPS (607861)

Legal Description

Plat of Survey
Lot 4 and portion of lot 1 of block 1 of
Mediterranean Office Park Addition
to the City of Wichita,
Sedgewick County, Kansas.

Site Address

Center for Reproductive Medicine
9220 E. 29th Street
Wichita, KS 67226

Owner / Developer

GTB Enterprises
2903 E Central
Wichita, KS 67214

Engineer

Marshall Erdman & Associates, Inc.
5117 University Avenue
Madison, WI 53705
(608) 238 – 0211

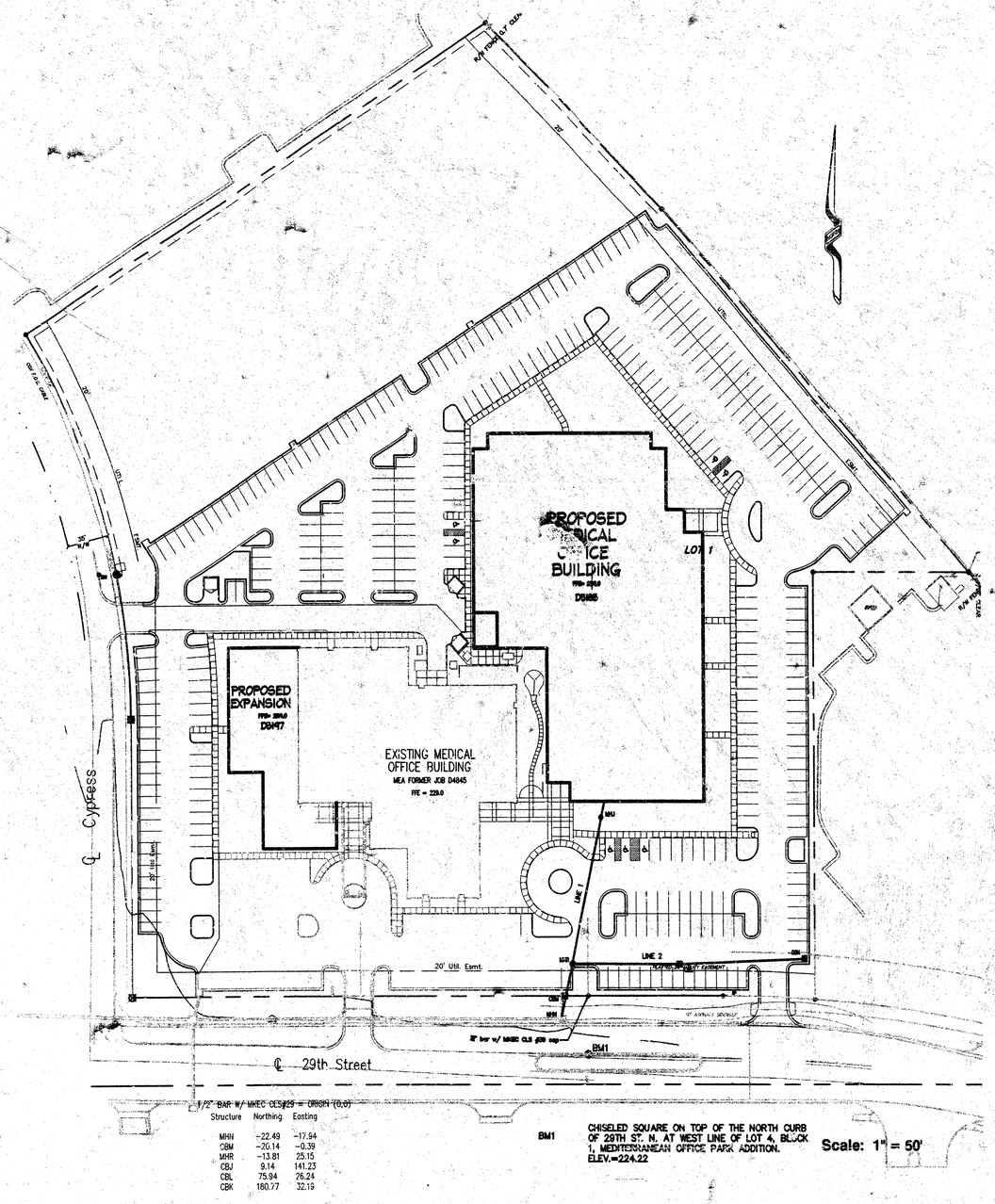

1/2" BAR W/ MKEC CES#29 = ORIGIN (0,0)

Structure	Northing	Easting
MHN	-22.49	-17.94
CBM	-20.14	-0.39
MHR	-13.81	25.15
CBJ	9.14	141.23
CBL	75.94	26.24
CBK	180.77	32.19

BM1 — CHISELED SQUARE ON TOP OF THE NORTH CURB OF 29TH ST. N. AT WEST LINE OF LOT 4, BLOCK 1, MEDITERRANEAN OFFICE PARK ADDITION. ELEV.=224.22

Scale: 1" = 50'

Site Location

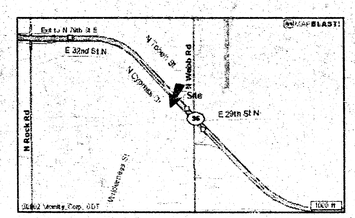

Scale: 1" = 2000'

Sheet Index

CS.T	TITLE SHEET
CS.1	SITE UTILITY PLAN
CS.2	DETAIL SHEET
CS.3	DETAIL SHEET
CS.4	DETAIL SHEET

General Notes

ANY 12-INCH OR LESS IN DIAMETER STORM DRAINS SHOWN IN THESE PLANS ARE NOT PART OF THIS PROJECT.

UNLESS SHOWN OR STATED OTHERWISE ON THESE DRAWINGS, MATERIALS AND CONSTRUCTION SHALL BE IN ACCORDANCE WITH CITY OF WICHITA STANDARD SPECIFICATIONS.

THE CONTRACTOR SHALL BE RESPONSIBLE FOR PRESERVING PROPERTY IRONS. THE CONTRACTOR WILL BE REQUIRED TO RE-ESTABLISH ANY PROPERTY IRONS WHICH ARE DAMAGED OR DESTROYED BY ITS CONSTRUCTION OPERATIONS. SUCH IRONS SHALL BE RE-ESTABLISHED BY A LICENSED LAND SURVEYOR IN ACCORDANCE WITH STATE LAWS.

EXISTING UTILITIES AND THEIR LOCATIONS, AS SHOWN ON THE PLANS REPRESENT THE BEST INFORMATION OBTAINABLE FOR DESIGN. LOCATION INFORMATION HAS BEEN OBTAINED FROM THE VARIOUS UTILITY COMPANIES AND IS EITHER FROM COMPANY RECORD DRAWINGS OR COMPANY PROVIDED FIELD LOCATIONS. THE PLAN LOCATIONS ARE NOT GUARANTEED. ADDITIONAL EXISTING UTILITIES MAY BE ENCOUNTERED.

CONTRACTOR WILL BE REQUIRED TO PROVIDE A MINIMUM ADVANCE NOTICE OF FORTY-EIGHT (48) HOURS TO UTILITY COMPANIES PRIOR TO STARTING ANY EXCAVATION AS FOLLOWS:

KANSAS ONE-CALL	1-800-344-7233
	316-687-2470 (LOCAL WICHITA)

THE CONTRACTOR MUST NOTIFY THE FOLLOWING IN CASE OF AN EMERGENCY:

SOUTHWESTERN BELL TELEPHONE COMPANY	1-800-734-7590
COX CABLEVISION	262-0661
KG&E (ELECTRIC)	383-8600
KANSAS GAS SERVICE	383-8600
CITY OF WICHITA WATER AND SEWER MAINT.	262-6000
PEOPLES NATURAL GAS	1-800-303-0357

THE TOPS OF INLETS AS NOTED ON THE PLANS MAY VARY SO AS TO MEET PROPOSED TOP OF CURB OR PAVEMENT ELEVATIONS. THE FIELD ENGINEER SHALL LOCATE INLETS WITH REFERENCE TO PROPOSED PAVING PLANS OF THE PERTINENT IMPROVEMENTS.

APPROVED AS NOTED
BY CITY ENGINEER OF WICHITA

STORM SEWERS VRH 3/26/03

16 08 02 08

Marshall Erdman & Associates

3001 Summit Ave. Suite 200
Plano, Texas 75074
Phone: (972) 881-0882
FAX: (972) 881-0514

CYRESS MEDICAL OFFICE BUILDING

Document Release

12-05-02	STORMSEWER 1
12-17-02	STORMSEWER 2

Drn: twerndli Chk: taschenbrenner

Sheet Name
TITLE SHEET

Scale: AS NOTED

Sheet Number
CS.T

WICHITA, KS
05185/5197

All rights reserved. This document, and the concepts and ideas contained herein, are the intellectual property of Marshall Erdman & Associates, Inc. Use of or work on any project, in whole or in part, without the written consent of Marshall Erdman & Associates, Inc. is prohibited. Any unauthorized use will be prosecuted to the fullest extent of the law.

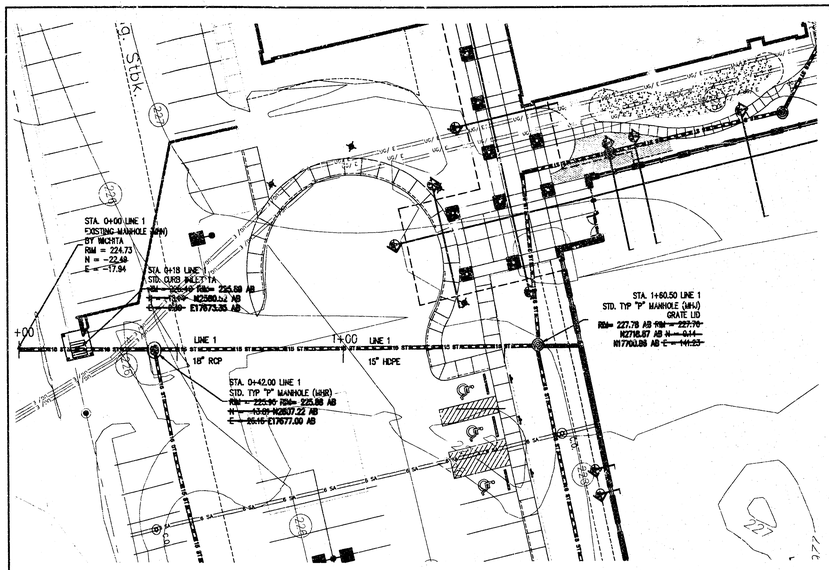

PLAN LINE 1

SCALE: 1" = 20'

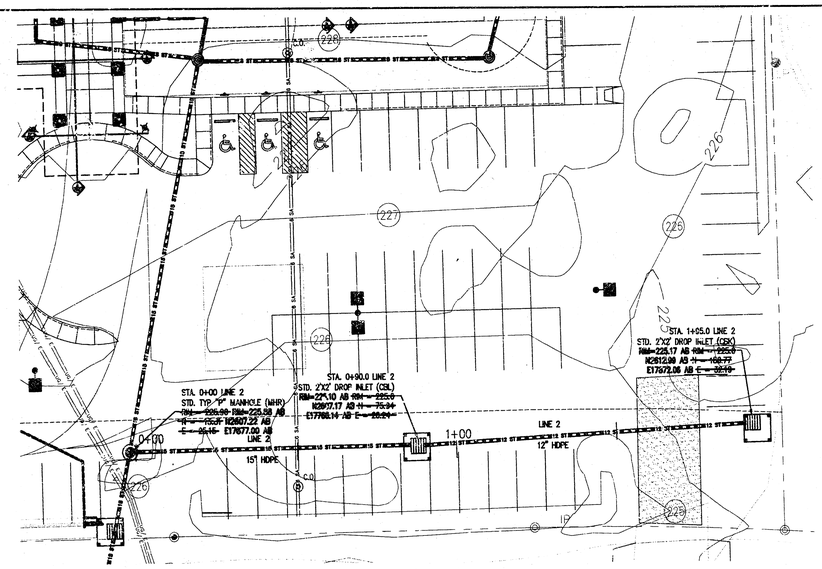

PLAN LINE 2

SCALE: 1" = 20'

PROFILE LINE 1

SCALE HORIZONTAL: 1" = 20'
SCALE VERTICAL: 1" = 5'

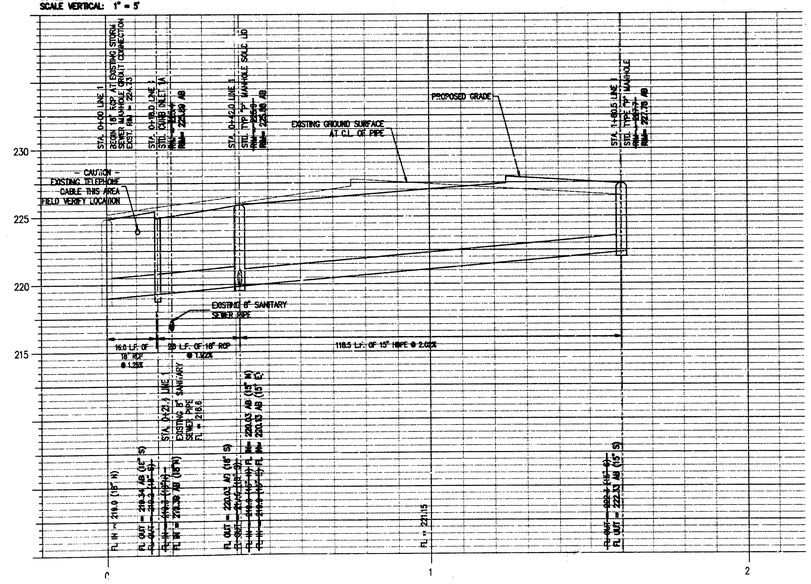

PROFILE LINE 2

SCALE HORIZONTAL: 1" = 20'
SCALE VERTICAL: 1" = 5'

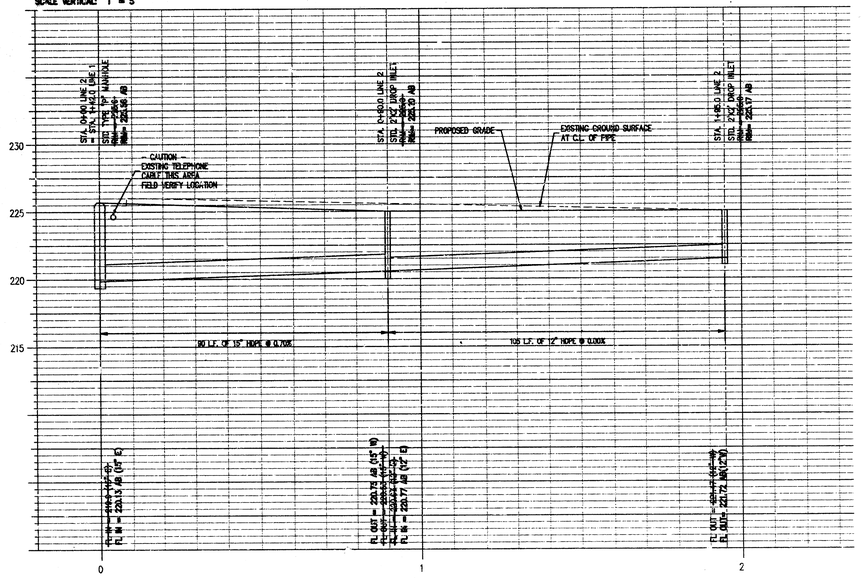

12-03-02 STORMSEWER 1
12-17-02 STORMSEWER 2
12-23-02 SITE CONTRACTOR

THERNDLI TASCHENZEICHNUNG

SITE STORM SEWER PLAN & PROFILE

AS NOTED

CS.1

1301PPS
AS-BUILT: JANUARY 2004
J:\CIVIL\03069\DWG\C_CUT_10AB

SEWER APPURTENANCES DETAILS

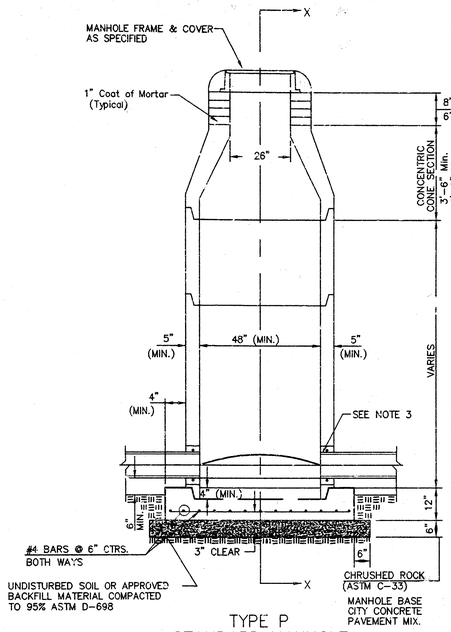

TYPE P
STANDARD MANHOLE

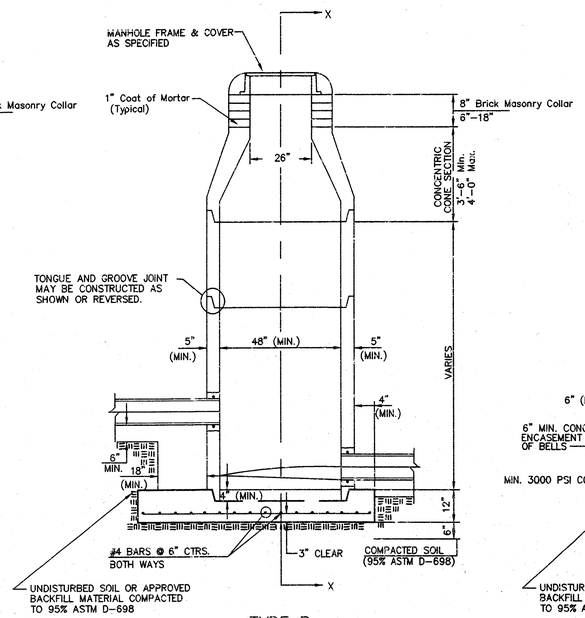

TYPE P
INSIDE DROP MANHOLE

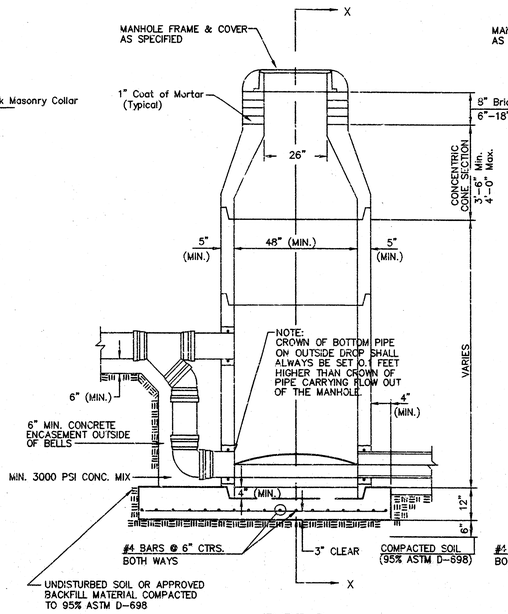

TYPE P
OUTSIDE DROP MANHOLE

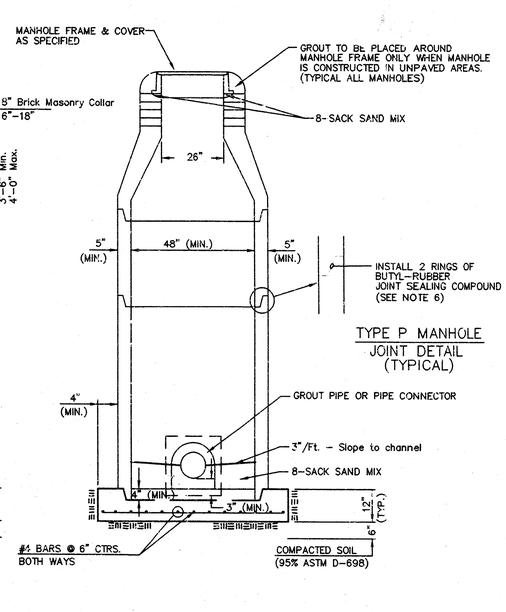

SECTION X
(TYPICAL)

GENERAL NOTES

PRECAST MANHOLE NOTES

1. ALL PRECAST CONCRETE MANHOLE SECTIONS SHALL CONFORM TO THE LATEST REVISIONS OF A.S.T.M. C478 AS MODIFIED BY THE SPECIFICATIONS.
2. NON-SHRINK GROUT SHALL BE NON-METALLIC TYPE.
3. APPROVED FLEXIBLE WATERSTOP GASKETS SHALL BE INSTALLED TO JOIN THE SEWER TO THE MANHOLE WALL WHEN A.B.S. COMPOSITE PIPE OR P.V.C. PIPE IS USED. FOR OTHER TYPES OF PIPE THE SEWER SHALL BE GROUTED IN PLACE WITH NON-SHRINK GROUT. THE SEWER PIPE SHALL BE SUPPORTED WITH CONCRETE ENCASEMENT A MINIMUM OF 3 FEET FROM THE MANHOLE WALL AND TO THE FIRST JOINT FOR V.C.P. SUCH THAT THE JOINT REMAINS FLEXIBLE.
4. ALL INSIDE SURFACES OF THE CONCRETE MANHOLE WHICH WOULD BE EXPOSED TO SEWER GAS SHALL BE COATED WITH 2 COATS THEMEC SERIES 66 HI-BUILD EPOXOLINE, DRY THICKNESS OF 8 MILS (MIN.)
5. EXTERIOR MANHOLE WALLS SHALL BE COATED WITH 1 COAT MOBILARMA 633 BITUMINOUS COATING.
6. JOINT SEALING COMPOUND SHALL BE KENT SEAL NO. 2 OR APPROVED EQUAL.
7. PRECAST MANHOLES SHALL BE SET AT LEAST 4 INCHES INTO THE MANHOLE BASE.
8. TOP OF MANHOLE FLOOR SLAB SHALL BE AT LEAST 3 INCHES BELOW THE FLOW LINE OF THE OUTLET PIPE TO INSURE SUFFICIENT MINIMUM THICKNESS OF SHAPED INVERT.
9. LIFTING HOLES SHALL BE FILLED WITH NON-SHRINK GROUT AND THE INTERIOR SURFACE COATED AS SPECIFIED.
10. MORTAR USED IN MASONRY CONSTRUCTION SHALL CONTAIN 8 SACKS OF CEMENT PER CUBIC YARD. CONCRETE USED IN MANHOLE BASES SHALL CONFORM TO THE REQUIREMENTS OF CONCRETE FOR CONCRETE PAVEMENT CONSTRUCTION AS SPECIFIED IN THE CITY STANDARD PAVING SPECIFICATIONS USING CITY CONCRETE PAVEMENT MIX WITHOUT AIR ENTRAINING ADMIXTURE. MORTAR SHALL BE PLACED AROUND THE MANHOLE RING AS SHOWN ON THE DRAWINGS WHEN MANHOLES ARE CONSTRUCTED IN UNPAVED AREAS. MANHOLES CONSTRUCTED WHERE PIPE SIZES ARE SMALLER THAN 24" SHALL HAVE AN INSIDE DIAMETER OF 4'. MANHOLES CONSTRUCTED WHERE PIPE SIZES ARE 24" OR LARGER SHALL HAVE AN INSIDE DIAMETER OF 5'. COMPLETED MANHOLE SHALL BE WITHOUT LEAKS AND WATER TIGHT.
11. REINFORCING STEEL SHALL BE INSTALLED IN THE MANHOLE BASES AND SHALL CONSIST OF NO. 4 BARS PLACED ON 6" CENTERS IN BOTH DIRECTIONS. THE MANHOLE BASE REINFORCEMENT SHALL BE PLACED AT LEAST 3" ABOVE THE BOTTOM OF THE MANHOLE BASE. ALL COSTS FOR FURNISHING AND INSTALLING REINFORCING STEEL SHALL BE INCLUDED IN THE UNIT PRICE BID FOR THE MANHOLE.
12. OPENINGS SHALL BE CUT INTO THE MANHOLE WALL WHEN OUTSIDE DROPS ARE CONSTRUCTED ON EXISTING MANHOLES. SUCH OPENINGS CUT INTO EXISTING MANHOLES SHALL BE AS SMALL AS PRACTICAL TO FACILITATE INSTALLING AND GROUTING THE NEW PIPE IN PLACE. WATERSTOP GASKETS SHALL BE USED WITH P.V.C. AND A.B.S. COMPOSITE PIPE. THE NEW PIPE SHALL BE GROUTED INTO THE OPENING USING AN APPROVED NONSHRINK GROUT FOR THE FULL MANHOLE WALL THICKNESS. THE EXTERIOR OF THE COMPLETED CONNECTION SHALL BE SEALED WITH AN APPROVED BITUMINOUS COATING SUCH THAT THE CONNECTION WILL BE WATER TIGHT. FLOOR OF MANHOLE SHALL BE MODIFIED TO FORM NEW FLOW CHANNEL FOR THE NEW CONNECTION AS INDICATED BY THE DRAWING. THIS WORK, INCLUDING MODIFICATION OF MANHOLE FLOOR, SHALL BE PAID FOR AT THE UNIT PRICE BID FOR OUTSIDE DROP STACK CONSTRUCTED ON EXISTING MANHOLE.
13. THE FLOORS OF ALL MANHOLES SHALL BE SHAPED WITH FLOW CHANNELS SUCH THAT THE MANHOLES WILL BE SELF CLEANING AND FREE OF AREAS WHERE SOLIDS COULD BE DEPOSITED AS SEWAGE FLOWS THROUGH THE MANHOLE FROM ALL INLET PIPES TO THE OUTLET PIPE. FLOW CHANNELS SHALL BE FORMED TO MATCH THE BOTTOM HALVES OF THE INFLOWING PIPES AND THE OUTFLOWING PIPE AS SHOWN BY THE DRAWINGS EXCEPT FOR INSIDE DROP MANHOLES. FLOW CHANNELS FOR INSIDE DROP MANHOLES SHALL BE CONSTRUCTED AS INDICATED BY THE DRAWING. MANHOLE FLOORS SHALL HAVE SLOPES OF 3 INCHES PER FOOT IN THE AREAS OUTSIDE OF THE FLOW CHANNELS SLOPED TOWARD THE FLOW CHANNELS. PIPES LAID THROUGH MANHOLES SHALL HAVE THE TOP HALF REMOVED TO NEAT LINES FOR THE FULL INSIDE DIAMETER OF THE MANHOLE. MANHOLE FLOORS SHALL THEN BE SHAPED AROUND THE BOTTOM HALF OF THE PIPE WHICH FORMS THE FLOW CHANNEL.
14. PIPES INSTALLED WITHIN THE EXCAVATION MADE FOR THE MANHOLE SHALL BE CRADLED WITH CONCRETE TO THE LIMITS OF THE MANHOLE EXCAVATION. WHEN CLAY PIPE IS USED, THE CRADLE SHALL EXTEND TO THE FIRST JOINT OUTSIDE THE MANHOLE. THE CRADLE SHALL BE TERMINATED AT THE CLAY PIPE JOINT IN A MANNER WHICH WILL MAINTAIN THE FLEXIBILITY OF THE JOINT. COST OF CRADLE WITHIN MANHOLE EXCAVATION OR TO CLAY PIPE JOINTS ADJACENT TO MANHOLE SHALL BE INCLUDED IN THE UNIT PRICE BID FOR THE MANHOLE.
15. MANHOLE COVER CASTINGS AND MANHOLE FRAME CASTINGS SHALL CONFORM TO THE REQUIREMENTS AS INDICATED IN THE STANDARD SPECIFICATIONS AND AS SHOWN IN THE STANDARD DETAIL DRAWING.
16. THE VERTICAL DROP IN INSIDE DROP MANHOLES SHALL NOT EXCEED 2' FOR INFLOWING PIPES SIZED 12" OR SMALLER AND 2' FOR INFLOWING PIPES LARGER THAN 12". THE CROWNS OF INFLOWING PIPES SHALL NEVER BE SET LOWER THAN THE CROWN OF THE OUTFLOWING PIPE.
17. STANDARD MANHOLES AND STANDARD INSIDE DROP MANHOLES SHALL BE BID AS STANDARD MANHOLES FOR THE TYPE AND DIAMETER INDICATED. OUTSIDE DROP MANHOLES SHALL BE BID AS STANDARD OUTSIDE DROP MANHOLES FOR THE TYPE AND DIAMETER INDICATED. ALL MANHOLE DIAMETERS WILL BE 4' UNLESS INDICATED OTHERWISE.
18. A BRICK MASONRY COLLAR SHALL BE INSTALLED BETWEEN THE CAST IRON FRAME AND THE CONCENTRIC CONE. THE COLLAR WILL HAVE 8" WALLS AND A VERTICAL HEIGHT OF 6" MINIMUM AND 18" MAXIMUM. A 1" COAT OF MORTAR WILL BE PLASTERED ON THE OUTSIDE OF THE COLLAR. THE USE OF PRE-CAST CONCRETE SPACERS FOR MANHOLE TOP ADJUSTMENT IS ALSO ALLOWED.
19. CHRUSHED ROCK CONFORMING TO ASTM C-33 WITH A GRADATION OF NO. 67 SHALL BE INSTALLED AT THE BASE OF THE MANHOLE TO A DEPTH OF NO LESS THAN 6", AND SHALL EXTEND NO LESS THAN 6" OUTSIDE THE DIAMETER OF THE CONCRETE FLOOR OF THE MANHOLE.

Marshall Erdman & Associates
3001 Summit Ave. Suite 200
Plano, Texas 75074
Phone: (972) 881-0882
FAX: (972) 881-0314

CYRESS MEDICAL OFFICE BUILDING

12/19/02

Document Release

12-03-02	STORMSEWER 1

Drn: twerndl Chk: taschenbrenner

Sheet Name

DETAIL SHEET STANDARD TYPE "P" MANHOLES

Scale: AS NOTED

Sheet Number

CS.2

WICHITA, KS
D5185/5197

All rights reserved. This document, and the concepts and ideas contained herein, are the intellectual property of Marshall Erdman & Associates, Inc. (©) and shall not be used by any other entity for this project, extension of this project, in whole or in part, or any other project. This drawing may not be reproduced or altered without the express written consent of Marshall Erdman & Associates, Inc.

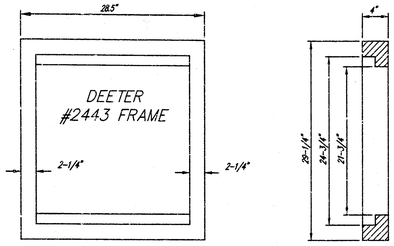

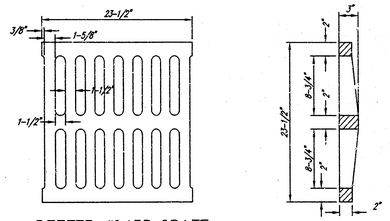

DEETER #2433 GRATE

NOTE: Grates shall be imprinted on the top surface with "CITY OF WICHITA" using letters at least 1" in height. Other marking methods may be approved by the engineer.

24" x 24" Frame and Grate Detail

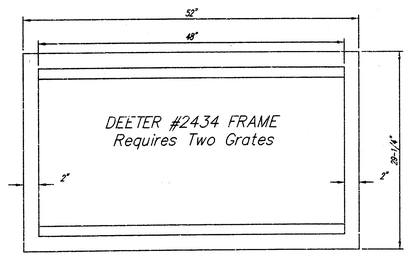

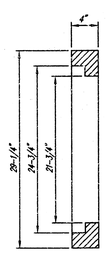

Double 24" x 24" Frame Detail

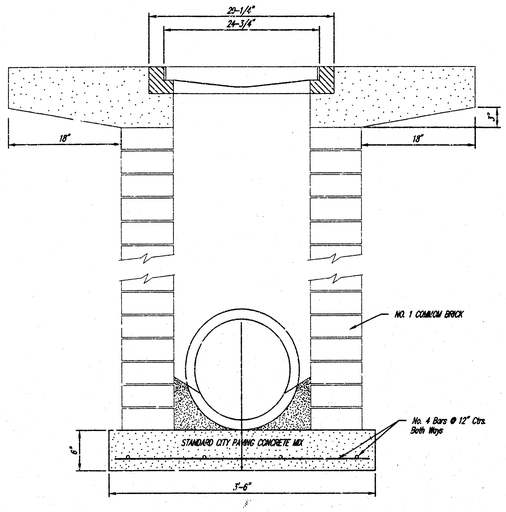

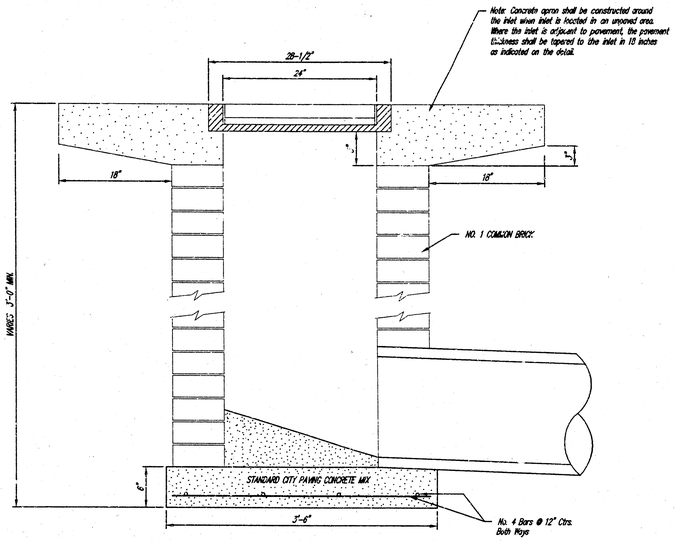

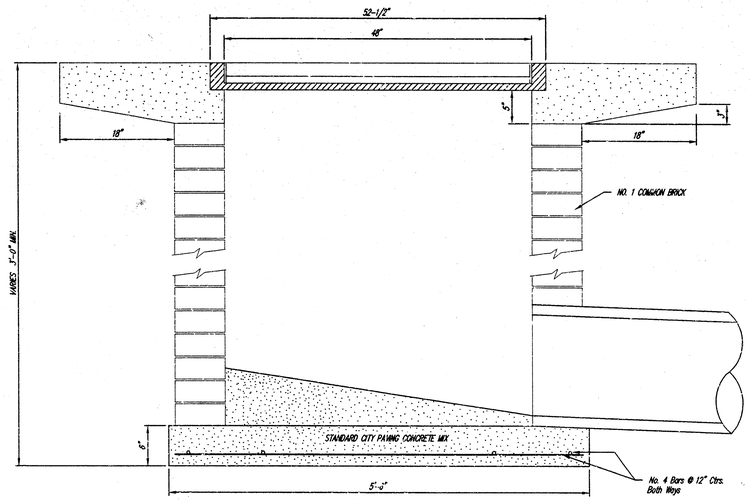

Marshall Erdman & Associates

3001 Summit Ave. Suite 200
Plano, Texas 75074
Phone: (972) 861-0802
FAX: (972) 881-0314

CYRESS MEDICAL OFFICE BUILDING

All rights reserved. This document, and the concepts and ideas contained herein, are the intellectual property of Marshall Erdman & Associates, Inc.(©) and shall not be used by any other entity for this project, extensions of this project, in whole or in part, or any other project. This drawing may not be reproduced or altered without the express written consent of Marshall Erdman & Associates, Inc.(©)

12/10/02

Document Release

12-03-02	STORMSEWER 1

Drn: twerndli Chk: taschenbrenner

Sheet Name

DETAIL SHEET DROP INLET 2'X2' / 2'X4'

Scale: AS NOTED

Sheet Number

CS.3

WICHITA, KS
D5185/5197

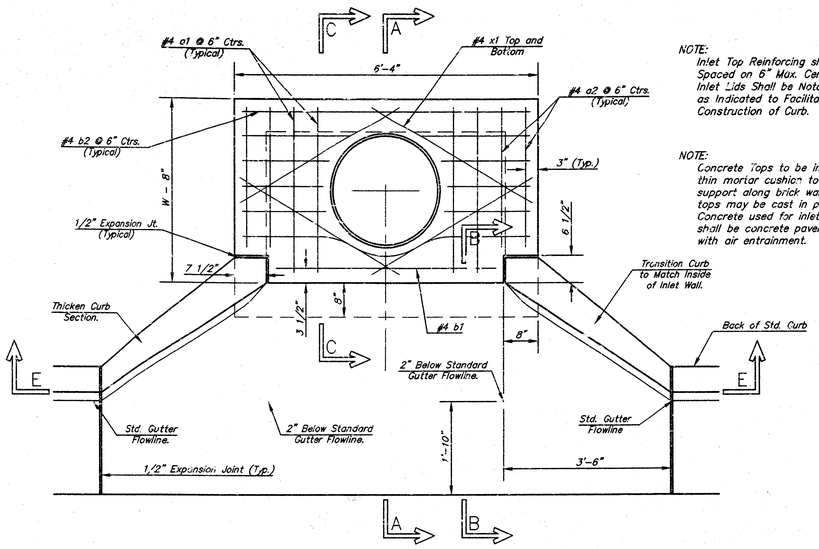

PLAN

NOTE:
Inlet Top Reinforcing shall be Spaced on 6" Max. Centers. Inlet Lids Shall be Notched Out as Indicated to Facilitate Construction of Curb.

NOTE:
Concrete Tops to be installed on thin mortar cushion to insure full support along brick walls. Concrete tops may be cast in place or precast. Concrete used for inlet construction shall be concrete pavement mix with air entrainment.

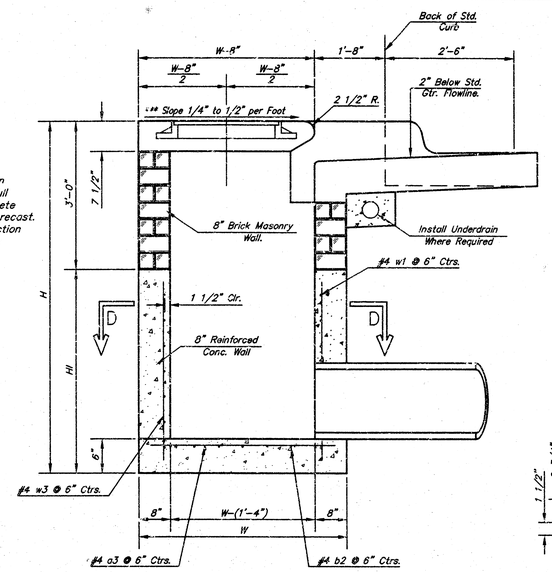

SECTION A–A

***NOTE: Slope of inlet tops to Match Sidewalk or Parking Slopes within Limits Indicated.

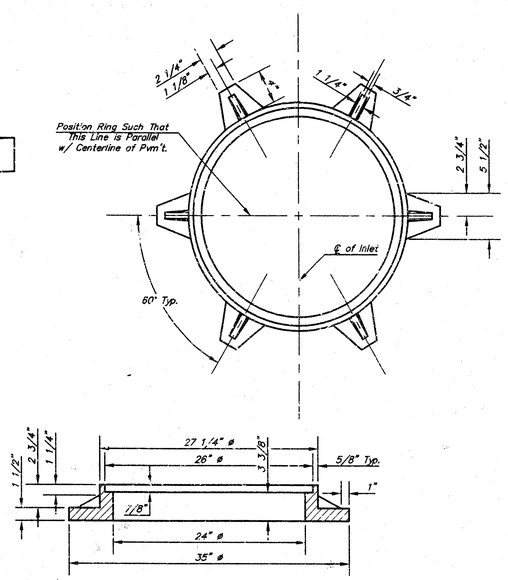

MANHOLE RING AND COVER

Weight = 180 Lbs.

*See City of Wichita Standard Manhole Ring and Cover Detail Sheet for Cover Details to Be Used With Inlet Frame.

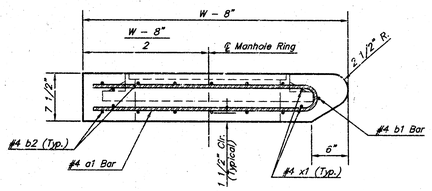

SECTION A--A

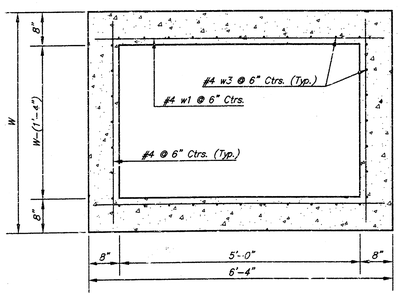

SECTION D–D

NOTE: Contractor shall have the option of constructing 8" brick masonry walls between the concrete inlet base and top on this inlet when W=6'-4" and H=7'-0" or more.

Additional curb and gutter construction necessary to connect set-back inlet to pavement will be paid for at the unit price bid for each inlet hookup.

Inlet invert shall be shaped with 8 sack sand mix concrete to create flow channels and to increase hydraulic efficiency such that the inlet will be self-cleaning between all inlet and/or outlet pipes.

The ends of all pipes installed in inlets shall be cut off flush with the inside face of the inlet wall

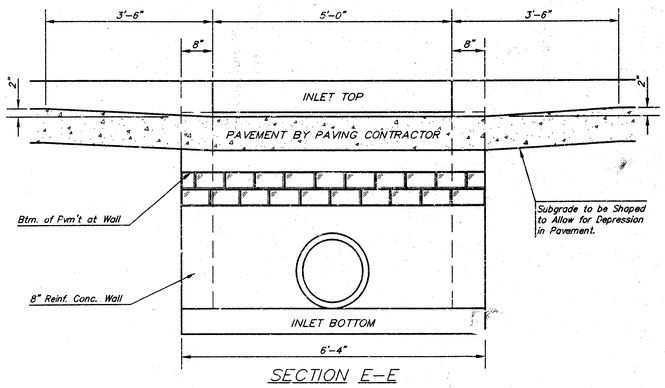

SECTION E–E

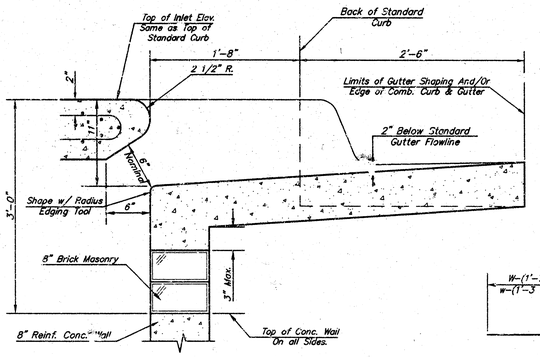

SECTION B–B

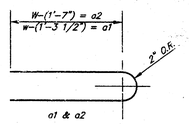

BENDING DIAGRAM

PRECAST SLAB AND FLOOR REINFORCING

		W = 3'-0"		W = 4'-0"		W = 5'-0"		W = 6'-0"		W = 7'-0"	
MARK	SIZE	NO.	LENGTH	NO.	LENGTH	NO.	LENGTH	NO.	LENGTH	NO.	LENGTH
* a1	#4	6	6'-7"	6	8'-7"	6	10'-7"	6	12'-7"	6	14'-7"
a2	#4	4	6'-0"	4	8'-0"	4	10'-0"	4	12'-0"	4	14'-0"
a3	#4	13	4'-1"	13	5'-1"	13	6'-1"	13	7'-1	13	8'-1"
b1	#4	1	4'-9"	1	4'-9"	1	4'-9"	1	4'-9"	1	4'-9"
* b2	#4	23	6'-1"	29	6'-1"	35	6'-1"	41	6'-1"	47	6'-1"
x1	#4	8	3'-10"	8	4'-2"	8	4'-6"	8	4'-10"	8	5'-2"
WALL REINFORCING											
		W = 3'-0"		W = 4'-0"		W = 5'-0"		W = 6'-0"		W = 7'-0"	
MARK	SIZE	NO.	LENGTH	NO.	LENGTH	NO.	LENGTH	NO.	LENGTH	NO.	LENGTH
w1	#4	①	6'-1"	①	6'-1"	①	6'-1"	①	6'-1"	①	6'-1"
w2	#4	①	4'-1"	①	5'-1"	①	6'-1"	①	7'-1"	①	8'-1"
w3	#4	32	②	36	②	40	②	44	②	48	②

* Field Bend or Cut Reinforcing as Required for Clearance.
① 4 (HI – 12") (HI – 21") Rounded down to nearest 0.5'
② HI – 3"

STANDARD CURB INLET PRECAST TOPS

W	PRE-CAST TOP SIZE	PIPE SIZE	CU. YD. CONC.
3'-0"	3'-8" x 6'-4" x 7 1/2"	21" & SMALLER	0.38±
4'-0"	4'-8" x 6'-4" x 7 1/2"	24" & 30"	0.51±
5'-0"	5'-8" x 6'-4" x 7 1/2"	36" & 42"	0.64±
6'-0"	6'-8" x 6'-4" x 7 1/2"	48" & 54"	0.77±
7'-0"	7'-8" x 6'-4" x 7 1/2"	60" & 66"	0.90±

THE CITY OF WICHITA

CITY ENGINEER'S OFFICE
CITY HALL – SEVENTH FLOOR
455 N. MAIN STREET
WICHITA, KANSAS 67202
(316) 268-4422
(316) 268-4114 FAX

STANDARD TYPE 1-A CURB INLET 5'-0" OPENING

M. E. LINDEBAK P.E. – CITY ENGINEER

PROJECT NUMBER	INDEX CODE
XXX-XXXXX	XXXXX
DATE: MAR 96	SHEET X OF X

REV. 8-16-01

TYPE 1-A INLET, L=5'.DWG

18 09 05 08

Marshall Erdman & Associates
3001 Summit Ave. Suite 250
Plano, Texas 75074
Phone: (972) 881-0882
FAX: (972) 881-0314

CYRESS MEDICAL OFFICE BUILDING

All rights reserved. The concepts and designs contained herein are the intellectual property of Marshall Erdman & Associates, Inc.© Copyright 2002 and not for use in any other way for this project, extensions of this project, or any other project. This drawing may not be reproduced or altered without the express written consent of Marshall Erdman & Associates, Inc.©

12/19/02

Document Release

12-17-02	STORMSEWER 2

Drn: twerndli Chk: toschenbrenner

Sheet Name

DETAIL SHEET CURB INLET TYPE 1-A

Scale: AS NOTED

Sheet Number

CS.4

WICHITA, KS
D5183/5197