PRIVATE STORM SEWER SYSTEM

TO SERVE WICHITA NORTH HIGHSCHOOL

PRIVATE PROJECT NUMBER 1340 PPS (607861)

GENERAL NOTES

1. Contractor will be required to provide a minimum advance notice of fourty-eight (48) hours to utility companies prior to starting any excavation as follows:

   Kansas One-Call 687-2470

   The Contractor must notify the following in case of an emergency:

Cox Communications	262-0661
Kansas Gas Service	383-8600
Westar	383-8600
Aquila Energy	1-800-303-0357
Southwestern Bell Telephone Company	1-800-286-8313
City of Wichita Water Department	262-6000
City of Wichita Sewer Maintenance	262-6000

2. Existing utilities and their location, as shown on the plans, represent the best information obtainable for design. Location information has been obtained from the various utility companies and is either from company record drawings or company-provided field locations. The Contractor will be required to work around existing utilities within the right-of-way which do not conflict with proposed construction.

3. A saw cut of the full depth of existing surface courses or pavement thickness shall be provided at locations where proposed construction abuts an existing surface course or pavement for which partial removal of that surface or pavement is required, except when such saw cuts are within three (3) feet of an existing joint the limits of removal shall be extended to the existing joint.

4. Rubble from the removal of miscellaneous structures and excess excavation which is to be wasted shall be disposed of on sites to be provided by the Contractor. These sites shall be approved by the Engineer as to suitability, appearance and site location. Locations that, in the opinion of the Engineer, will leave an unsightly appearance will not be approved.

5. All disposal sites must be approved by the Kansas Department of Health and Environment. Material either stockpiled or disposed of in a flood plain would require a Kansas State Board of Agriculture permit. Any material dumped in waters of the United States or wetlands is subject to U.S. Corps permitting regulations. Any material buried or stockpiled beyond approved of Engineers construction limits would require additional archeological investigations unless buried in a previously approved borrow location.

6. This project is located within the limits of a larger project which will include building construction. The General Contractor for the project will submit a Storm Water Pollution Prevention Plan for the entire project prior to beginning any work on this street project.

7. This project is to be constructed in accordance with City of Wichita Standard Specifications for the Construction of City Projects, and Policy on Construction of Public Works improvements by Private Contract.

8 No work shall begin on this project before required bonds are submitted to the City of Wichita, and the project inspector has been notified.

9. All areas of public R/W disturbed by construction of this project are to be restored in accordance with Administrative Regulation AR 72 of the City of Wichita.

10. Two-way traffic on Great Plains shall be maintained during construction.

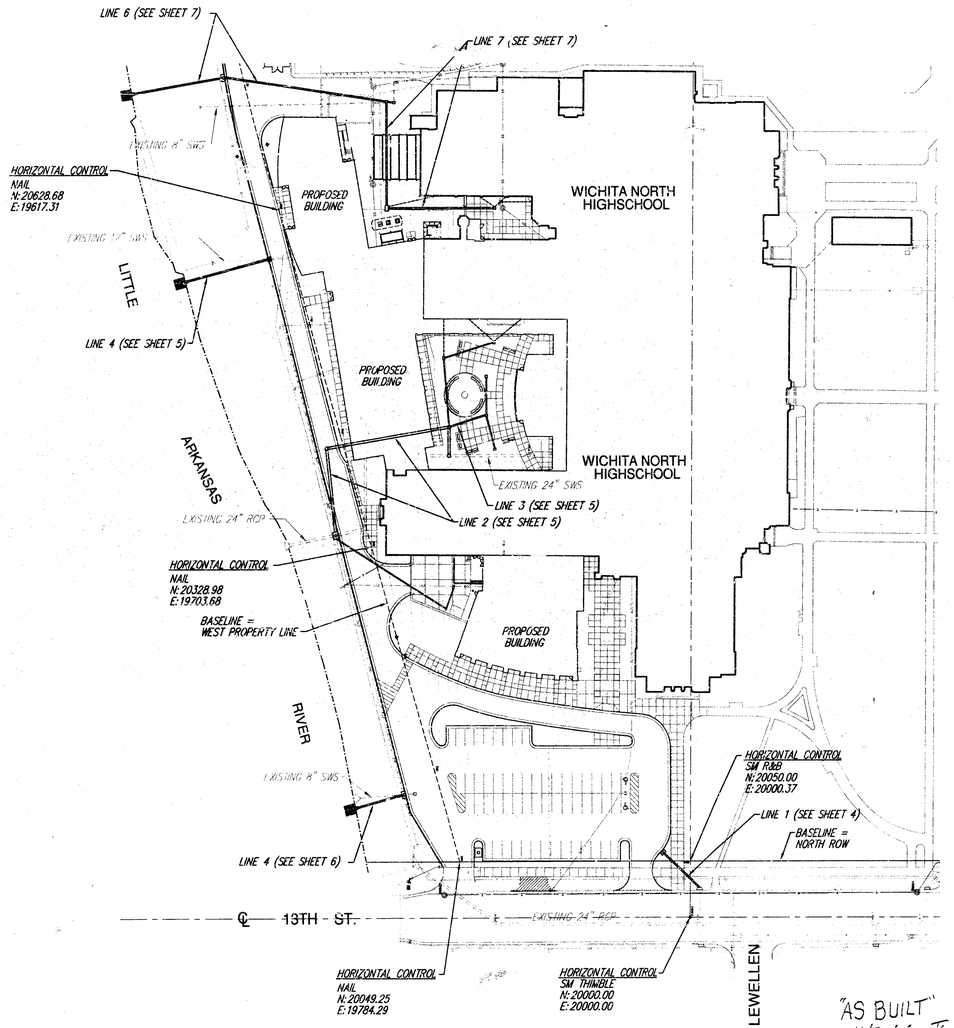

"AS BUILT"
11/30/04 B
R+B

INDEX OF SHEETS

1. INDEX SHEET
2. SITE GRADING PLAN SOUTH
3. SITE GRADING PLAN NORTH
4. STORM SEWER PLAN & PROFILE (LINE 1)
5. STORM SEWER PLAN & PROFILE (LINE 2 & 3)
6. STORM SEWER PLAN & PROFILE (LINE 4 & 5)
7. STORM SEWER PLAN & PROFILE (LINE 6 & 7)
8. TYPE I INLET DETAILS
9. TYPE II INLET DETAILS
10. DROP INLET/TRENCH DRAIN DETAILS

BENCHMARKS

BM #1 COW DISC, LITTLE ARKANSAS RIVER & 13TH STREET NE COR. OF BRIDGE ELEV. 1311.33 M.S.L.

BM #2 SQ. CUT ON TOP OF CURB 7'± EAST OF E END OF NE CURB RETURN OF ALLEY, N. SIDE OF 15TH STREET BETWEEN ARKANSAS AND JACKSON. ELEV. 1307.09 M.S.L.

APPROVED AS NOTED
BY CITY ENGINEER OF WICHITA

Sanitary Sewers _____
Storm Sewers VRH 6/9/03
Driveway Approaches _____
Water Mains _____
Paving _____

NOTE TO CONTRACTORS

Inspection and testing for this project are to be provided by a Licensed Consulting Engineering Firm under contract with the Owner/Developer. Said inspection to be in accordance with the City of Wichita standard construction engineering practices and certified by a Licensed Professional Engineer. No work shall be performed in dedicated easements or public right-of-way by the Contractor without such inspection, nor shall any work be commenced without written authorization by the City Engineer.

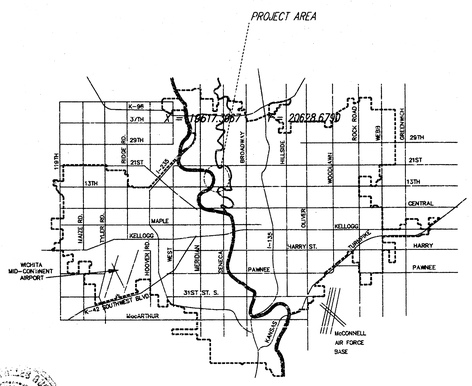

SCALE: 1"=60





Ruggles & Bohm, P.A.
Engineering, Surveying, Land Planning
924 North Main
Wichita, Kansas 67203
www.rbkansas.com
(315) 264-8008
(316) 264-4621 fax
E-mail: info@rbkansas.com

2365E

18 14 53 20

CITY OF WICHITA, KANSAS
NEIL D. CABLE, P.E., CITY ENGINEER

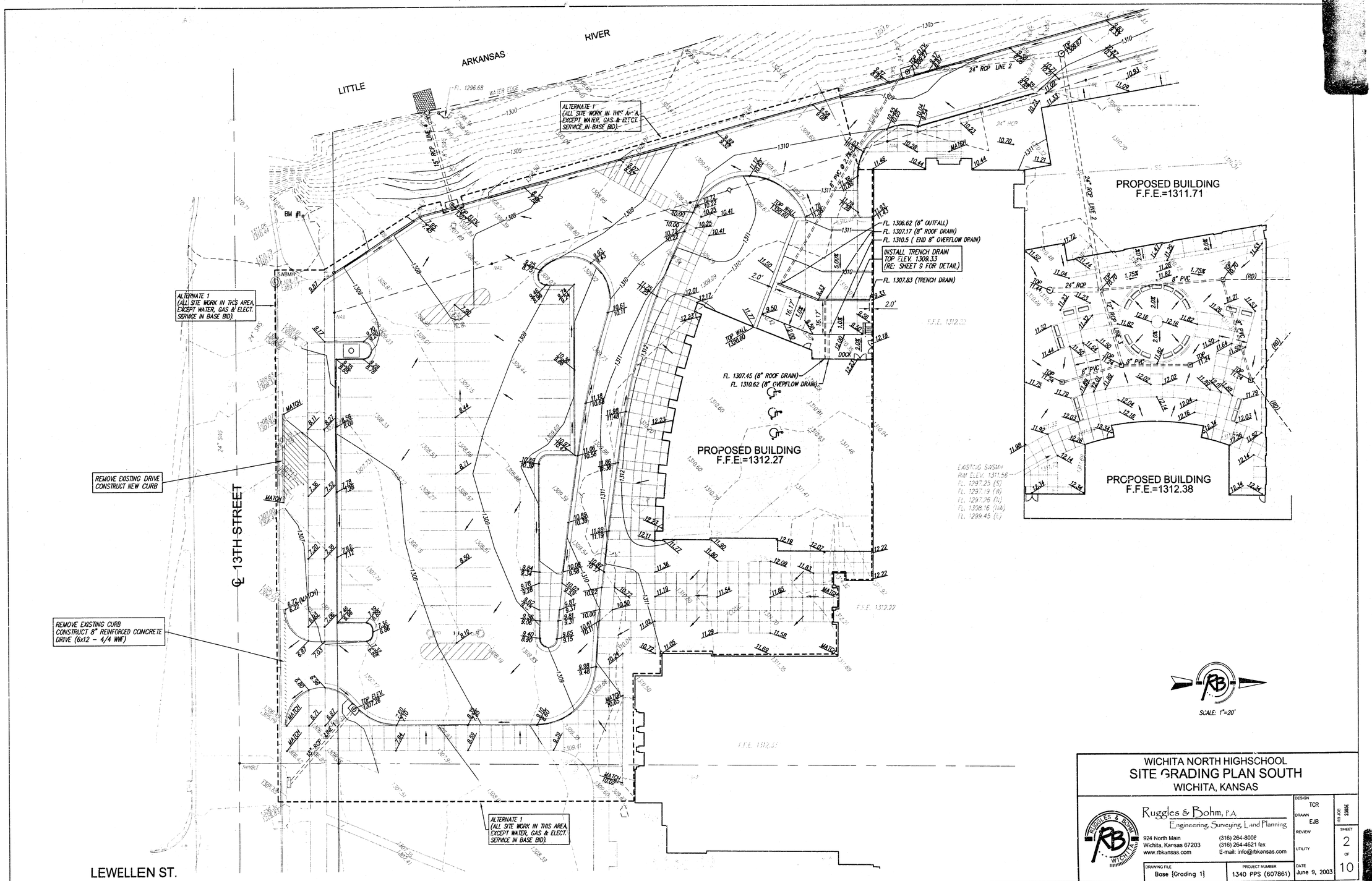

WICHITA NORTH HIGHSCHOOL

SITE GRADING PLAN SOUTH

WICHITA, KANSAS

Ruggles & Bohm, P.A.
Engineering, Surveying, Land Planning
924 North Main
Wichita, Kansas 67203
www.rbkansas.com
(316) 264-8008
(316) 264-4621 fax
E-mail: info@rbkansas.com

DESIGN	TCR
DRAWN	EJB
REVIEW	
UTILITY	
DRAWING FILE	Base {Grading 1}
PROJECT NUMBER	1340 PPS (607861)
DATE	June 9, 2003
RB JOB	2302E
SHEET	2 OF 10

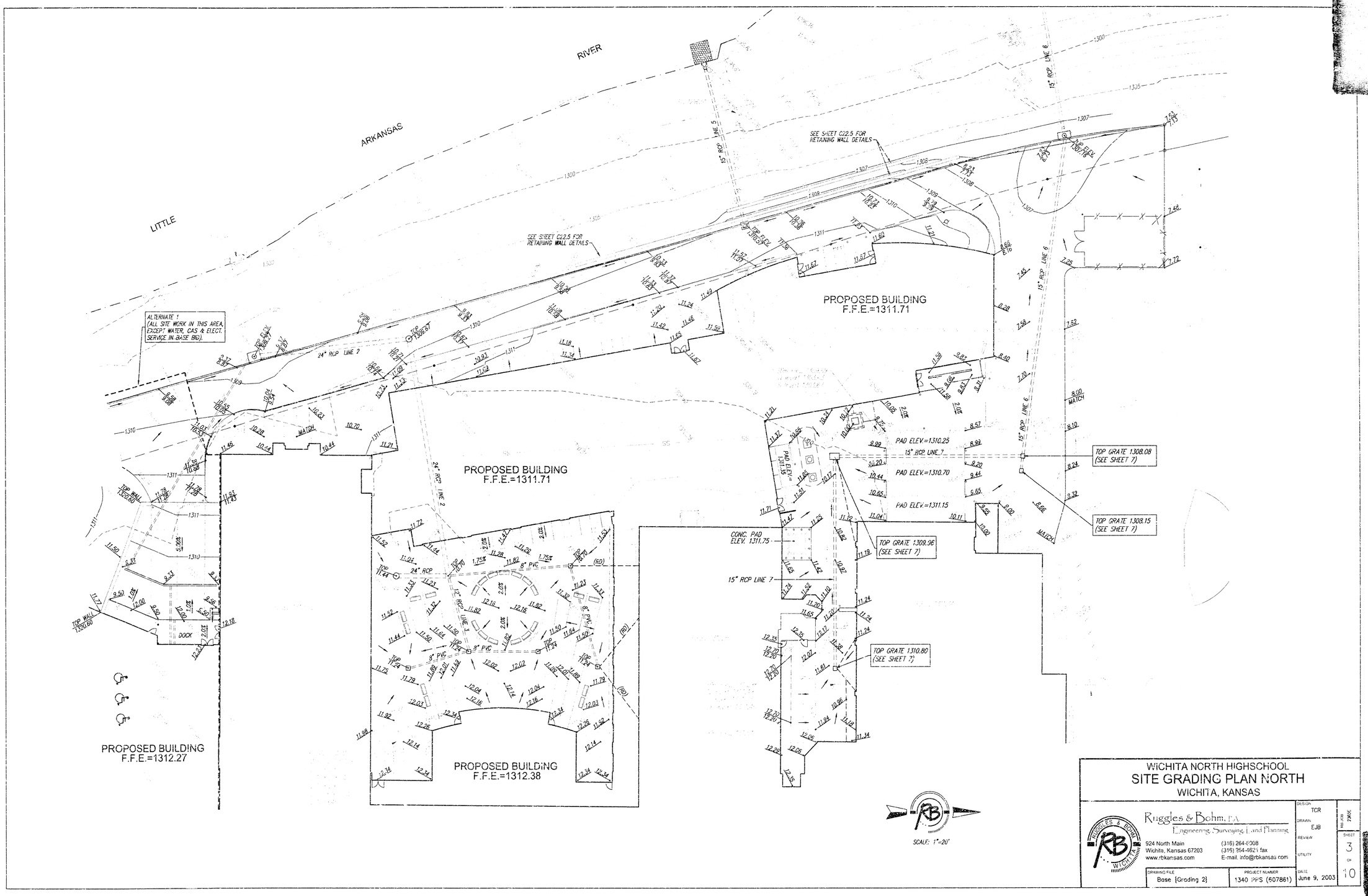

WICHITA NORTH HIGHSCHOOL

SITE GRADING PLAN NORTH

WICHITA, KANSAS

Ruggles & Bohm, P.A.
Engineering, Surveying, Land Planning
924 North Main
Wichita, Kansas 67203
www.rbkansas.com
(316) 264-6008
(316) 264-4621 fax
E-mail: info@rbkansas.com

DESIGN	TCR
DRAWN	EJB
REVIEW	
UTILITY	
DATE	June 9, 2003
DRAWING FILE	Base {Grading 2}
PROJECT NUMBER	1340 PPS (607861)
SHEET	3 OF 10

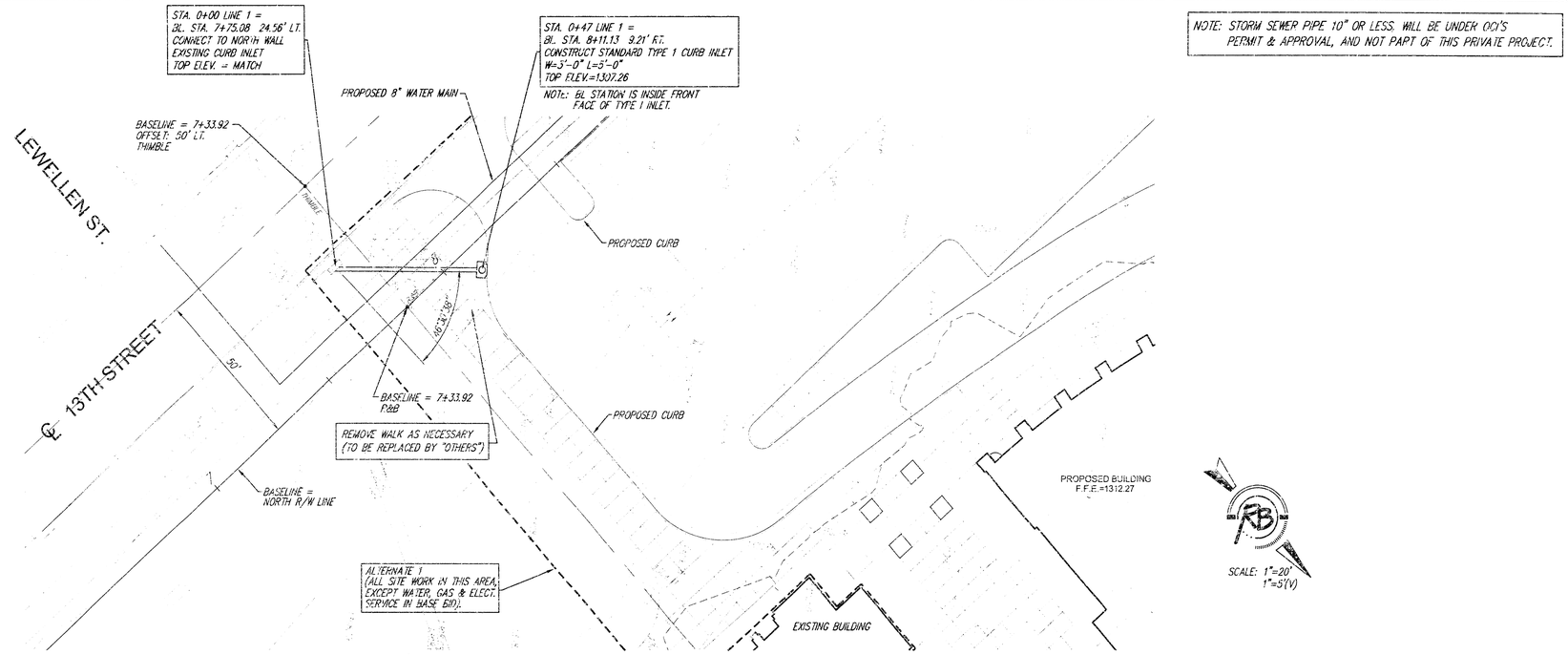

NOTE: STORM SEWER PIPE 10" OR LESS. WILL BE UNDER OCI'S PERMIT & APPROVAL, AND NOT PART OF THIS PRIVATE PROJECT.

LINE 1

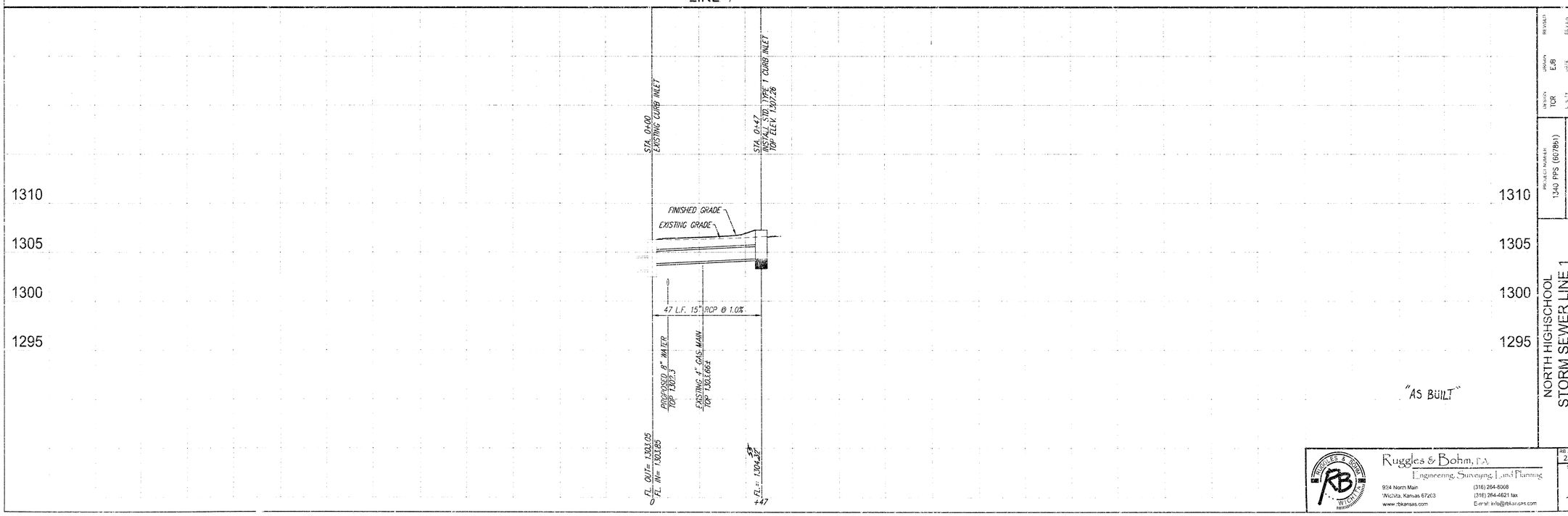

"AS BUILT"

DESIGN TCR | DRAWN EJB | REVISED | DATE June 9, 2003

PROJECT NUMBER 1340 PPS (607861) | DRAWING NAME Base (SW2 Line 1)

NORTH HIGHSCHOOL
STORM SEWER LINE 1
WICHITA, KANSAS

Ruggles & Bohm, P.A.
Engineering, Surveying, Land Planning
924 North Main
Wichita, Kansas 67203
www.rbkansas.com
(316) 264-8008
(316) 264-4621 fax
E-mail: info@rbkansas.com

RB JOB 2365E

SHEET 4 OF 10

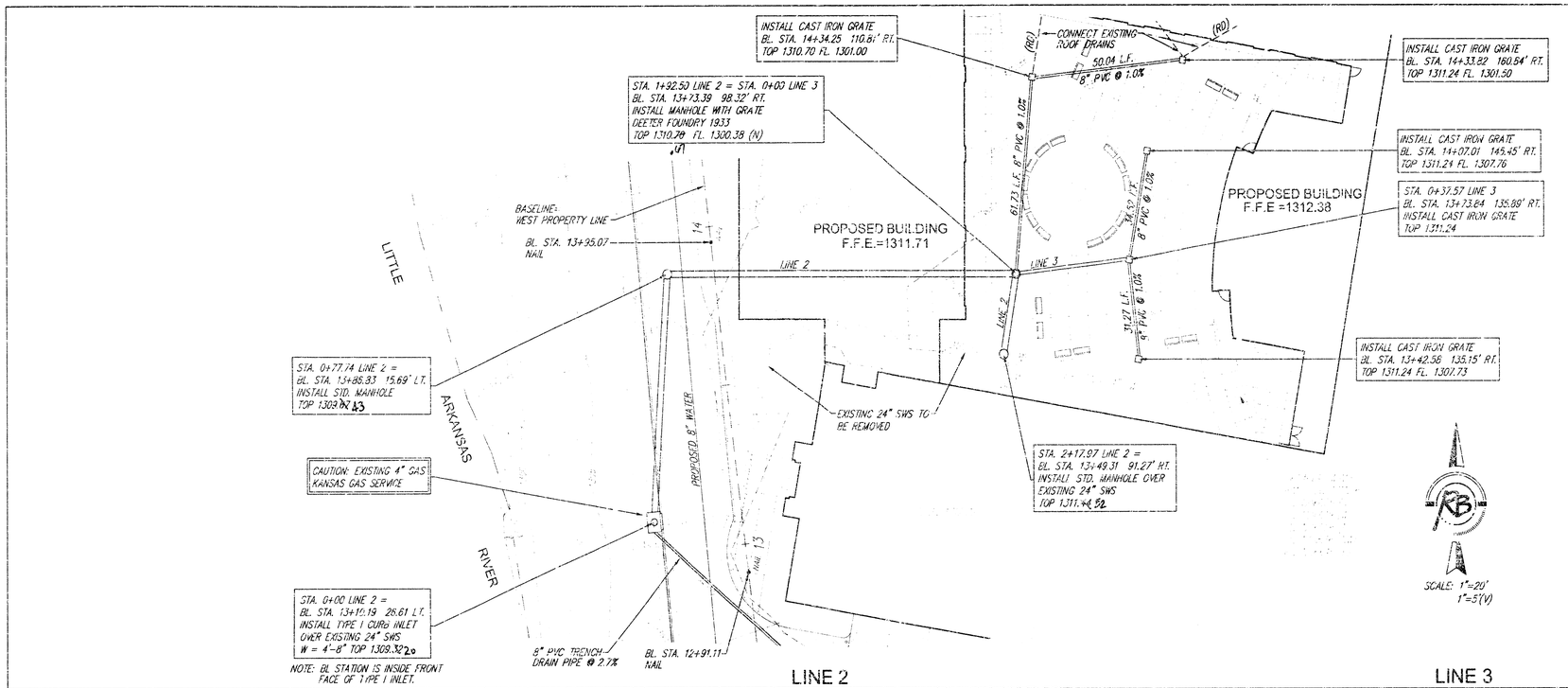

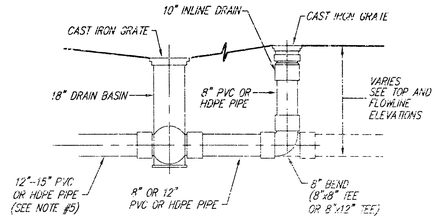

STORM WATER DRAIN CONNECTIONS TYPICAL DETAIL

1. STORM DRAIN PIPE (EXCEPT WHERE RCP IS INDICATED) TO BE PVC SDR35 PIPE RIBBED WALL PVC PIPE, OR HIGH DENSITY POLYETHYLENE CORRUGATED PIPE MEETING THE REQUIREMENTS OF AASHTO DESIGNATION M 294 (4"12 AS MFGD. BY ADVANCED DRAINAGE SYSTEMS, INC., OR APPROVED EQUAL).
2. DRAIN BASINS AND INLINE DRAINS TO BE PREFABRICATED HIGH-DENSITY POLYETHYLENE BASINS WITH FLAT SLOTTED CAST IRON GRATES (AS MFGD. BY ADS, INC.) OR APPROVED EQUAL).
3. CONNECTION OF DISSIMILAR PIPE MATERIALS SHALL BE MADE WITH ADAPTERS MADE FOR THAT PURPOSE.

NOTE: STORM SEWER PIPE 10" OR LESS, WILL BE UNDER DCI'S PERMIT & APPROVAL, AND NOT PART OF THIS PRIVATE PROJECT.

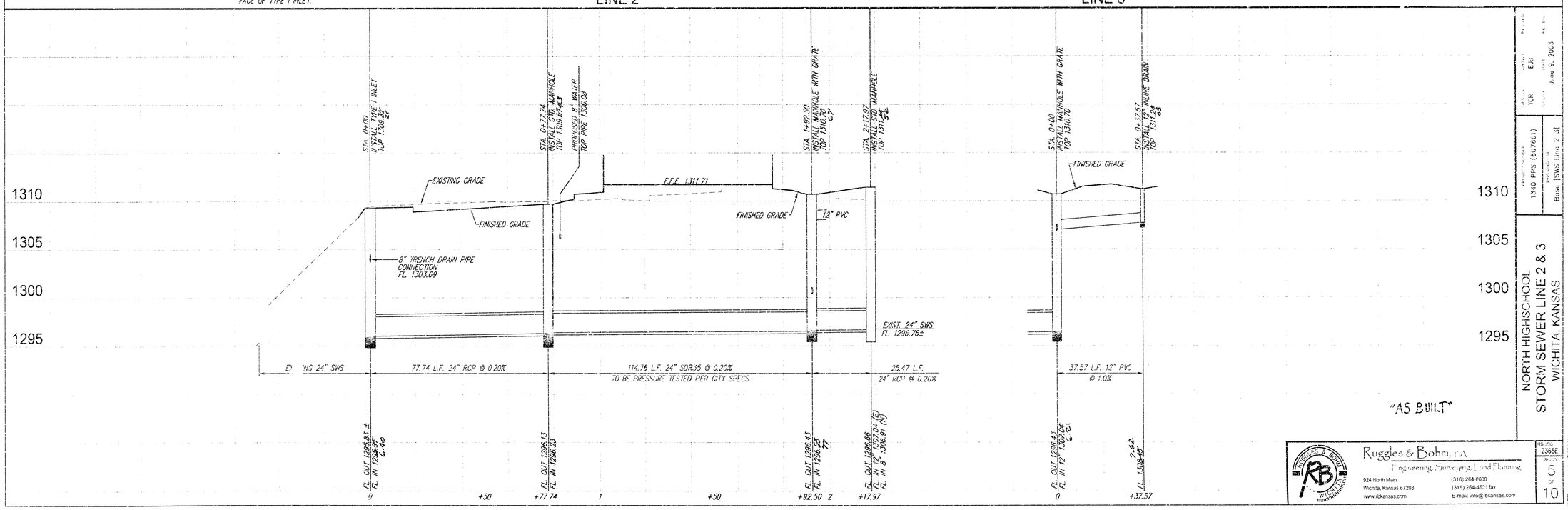

"AS BUILT"

Ruggles & Bohm, P.A.
Engineering, Surveying, Land Planning
924 North Main
Wichita, Kansas 67203
(316) 264-8008
(316) 264-4621 fax
www.rbkansas.com
E-mail: info@rbkansas.com

DRAWN:	TCH
CHECKED:	EAB
DATE:	June 9, 2003
PROJECT NUMBER	1340 PPS (607861)
DRAWING NAME	Base ISWS Line 2 3!

NORTH HIGHSCHOOL
STORM SEWER LINE 2 & 3
WICHITA, KANSAS

RB PROJECT NO. 2365E
SHEET 5 OF 10

NOTE: STORM SEWER PIPE 10" OR LESS, WILL BE UNDER OCI'S PERMIT & APPROVAL, AND NOT PART OF THIS PRIVATE PROJECT.

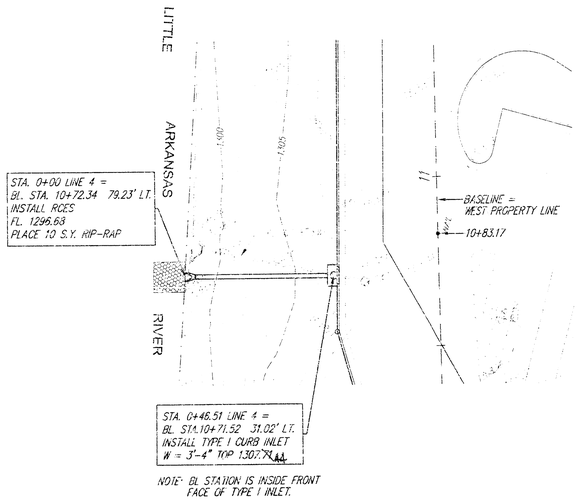

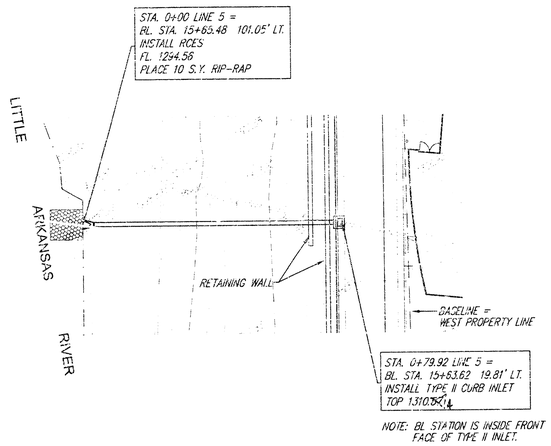

SCALE: 1"=20'
1"=5'(V)

LINE 4

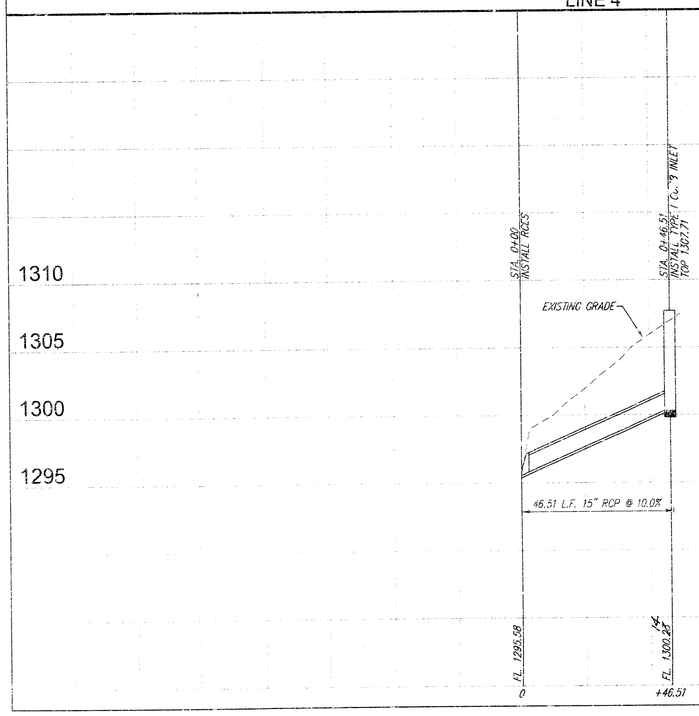

LINE 5

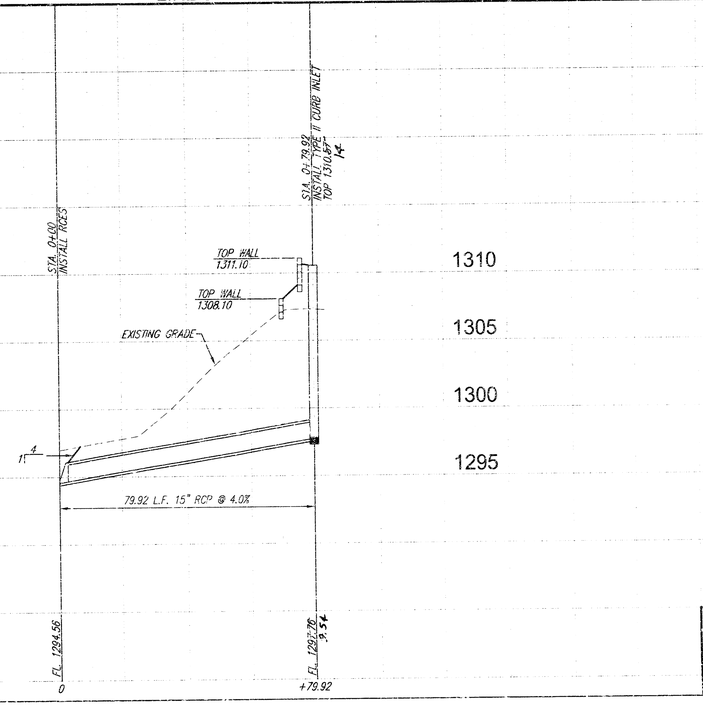

"AS BUILT"

NORTH HIGHSCHOOL
STORM SEWER LINE 4 & 5
WICHITA, KANSAS

PROJECT NUMBER: 1340 PPE (607861)
DRAWING NAME: Base (SWS Line 4 & 5)
DR. CHK. TGK
DRAWN: EJB
DATE: June 9, 2003

Ruggles & Bohm, P.A.
Engineering, Surveying, Land Planning
924 North Mead
Wichita, Kansas 67203
www.rbkansas.com
(316) 264-8008
(316) 264-4621 fax
E-mail: info@rbkansas.com

RB JOB NO. 2365E
SHEET 6 OF 10

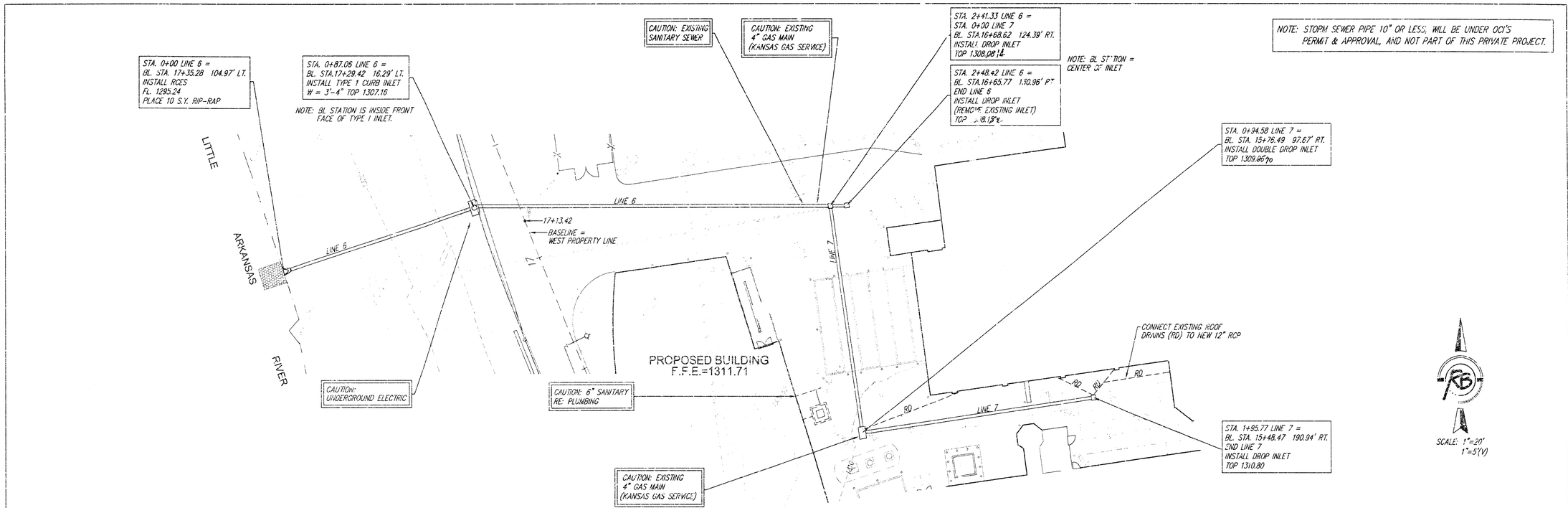

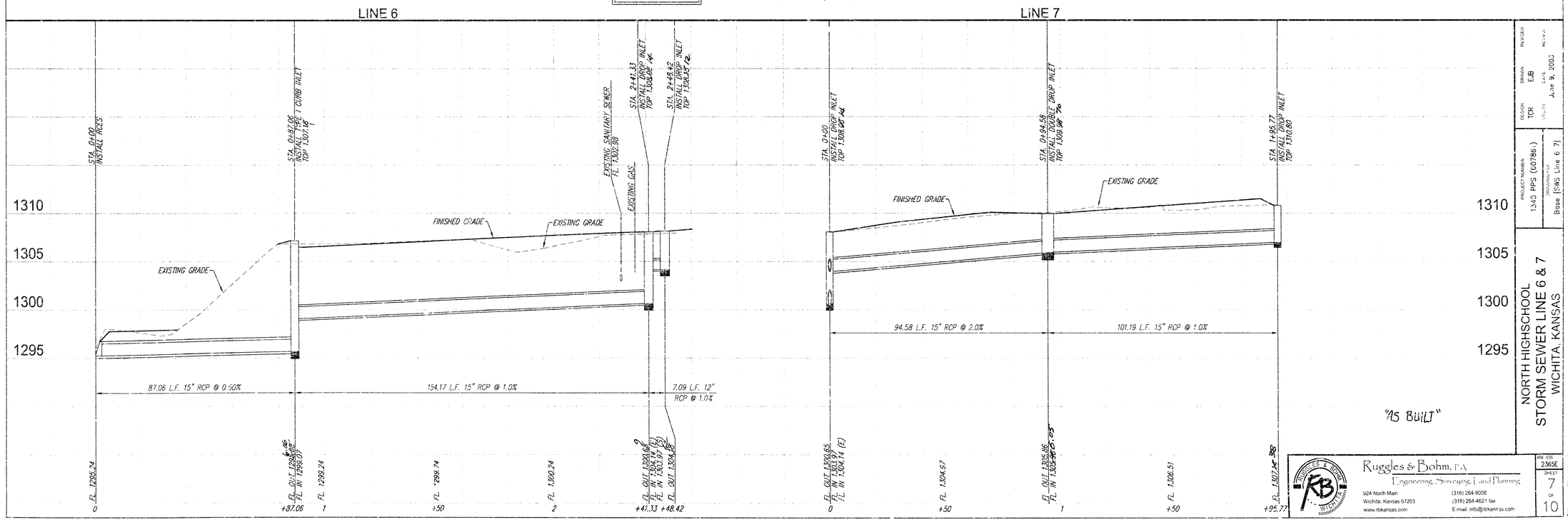

DESIGN TCR
DRAWN EJB
CHECKED
DATE June 9, 2000
REVISED

PROJECT NUMBER 1340 PPS (60786-)
DRAWING FILE Base (SW) Line 6 & 7

NORTH HIGHSCHOOL
STORM SEWER LINE 6 & 7
WICHITA, KANSAS

Ruggles & Bohm, P.A.
Engineering, Surveying, Land Planning
924 North Main
Wichita, Kansas 67203
www.rbkansas.com
(316) 264-8008
(316) 264-4621 fax
E-mail: info@rbkansas.com

RB JOB 2365E
SHEET 7 OF 10

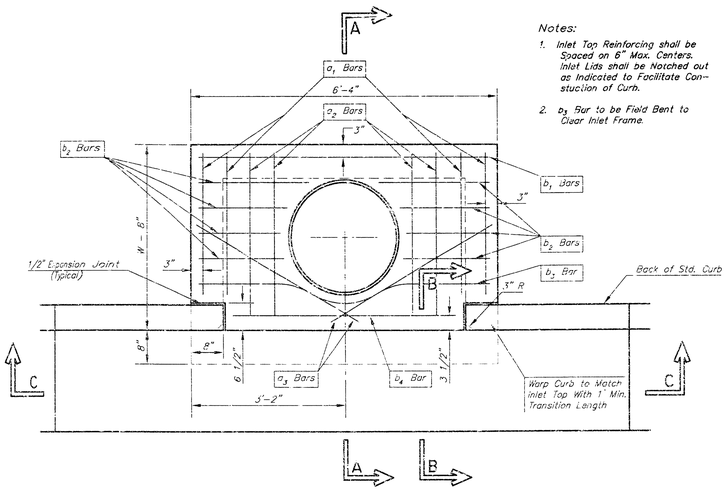

PLAN

Notes:

1. Inlet Top Reinforcing shall be Spaced on 6" Max. Centers. Inlet Lids shall be Notched out as Indicated to Facilitate Construction of Curb.
2. a_3 Bar to be Field Bent to Clear Inlet Frame.

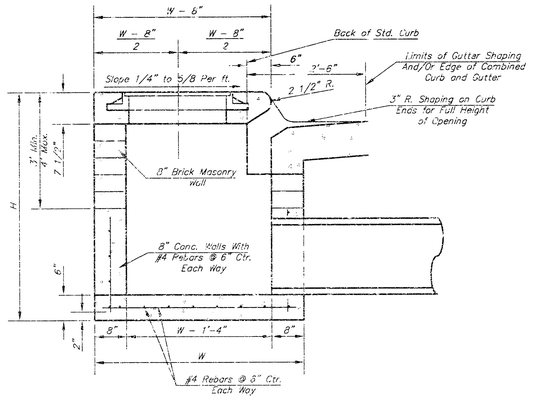

SECTION A-A

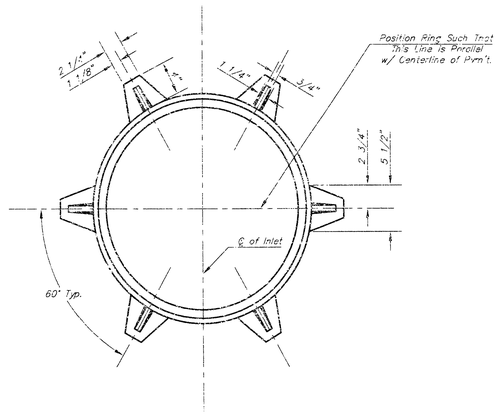

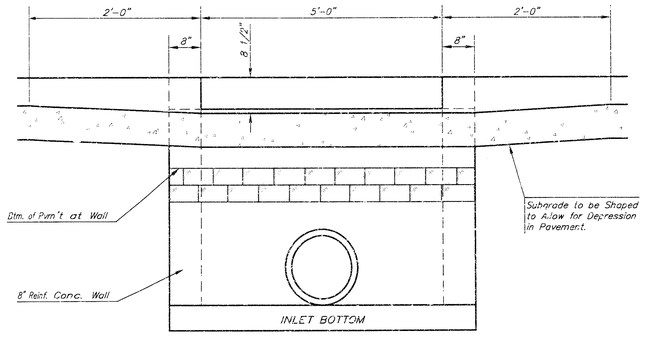

SECTION C-C

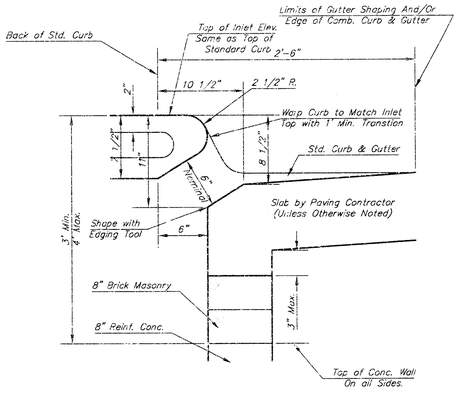

SECTION B-B

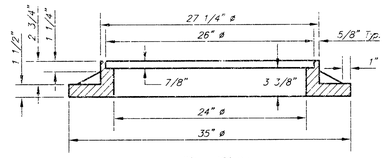

WT. = 180 lbs.

MANHOLE RING AND COVER

*See City of Wichita Standard Manhole Ring and Cover Detail Sheet for Cover Details to Be Used With Inlet Frame.

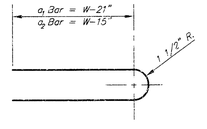

BENDING DIAGRAM

STEEL SCHEDULE

BAR		a_1	a_2	a_3	b_1 W=4'-4"	b_1 W=5'-4"	b_1 W=6'-4"	b_1 W=7'-4"	b_1 W=8'-4"	b_2	b_3	b_4	Wt. Lbs.
NUMBER		4	4	2	1	3	5	7	9	6	1	1	
SIZE		#4	#4	#4	#4	#4	#4	#4	#4	#4	#4	#6	
LENGTH	W=4'-4"	5'-7"	6'-7"	4'-0"	6'-1"	–	–	–	–	1'-9"	6'-2"	4'-8"	60±
	W=5'-4"	7'-7"	8'-7"	5'-0"	–	6'-1"	–	–	–	1'-9"	6'-2"	4'-8"	81±
	W=6'-4"	9'-7"	10'-7"	6'-0"	–	–	6'-1"	–	–	1'-9"	6'-2"	4'-8"	101±
	W=7'-4"	11'-7"	12'-7"	7'-0"	–	–	–	6'-1"	–	1'-9"	6'-2"	4'-8"	121±
	W=8'-4"	13'-7"	14'-7"	8'-0"	–	–	–	–	6'-1"	1'-9"	6'-2"	4'-8"	141±

Note: a_3 Bars to be Placed Approx. 2" Below Top of Inlet Cover.

STANDARD CURB INLET PRECAST TOPS			
W	PRE-CAST TOP SIZE	PIPE SIZE	CU. YD. CONC.
4'-4"	3'-8" 6'-4" 7 1/2"	21" & SMALLER	0.38±
5'-4"	4'-8" 6'-4" 7 1/2"	24" & 30"	0.51±
6'-4"	5'-8" 6'-4" 7 1/2"	36" & 42"	0.64±
7'-4"	6'-8" 6'-4" 7 1/2"	48" & 54"	0.77±
8'-4"	7'-8" 6'-4" 7 1/2"	60" & 66"	0.90±

GENERAL NOTES

1. Concrete tops to be installed on thin mortar cushion to insure full support along brick walls. Concrete tops may be cast in place or precast. Concrete used for inlet construction shall be concrete pavement mix.
2. Contractor shall have the option of constructing 8" brick masonry walls between the concrete inlet base and top on this inlet when W=6'-4" and H=7'-0" or less.
3. Inlet invert shall be shaped with 8 sack sand mix concrete to create flow channels and to increase hydraulic efficiency such that the inlet will be self cleaning between all inlet and/or outlet pipes.
4. The ends of all pipes installed in inlets shall be cut off flush with the inside face of the inlet wall.

THE CITY OF WICHITA

CITY ENGINEER'S OFFICE
CITY HALL - SEVENTH FLOOR
455 NORTH MAIN STREET
WICHITA, KANSAS 67202
(316) 268-4501
(316) 268-4114 FAX

STANDARD TYPE 1 CURB INLET OPENING = 6"x5'-0"

M. E. LINDEBAK P.E. - CITY ENGINEER

PROJECT NUMBER 1340 PPS (607861)

OCA #

DATE MAR 96

SHEET 8 OF 10

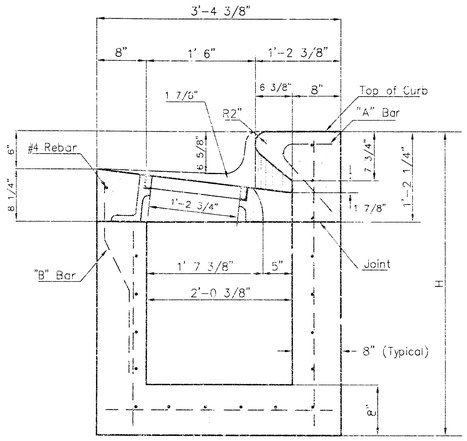

SECTION A-A

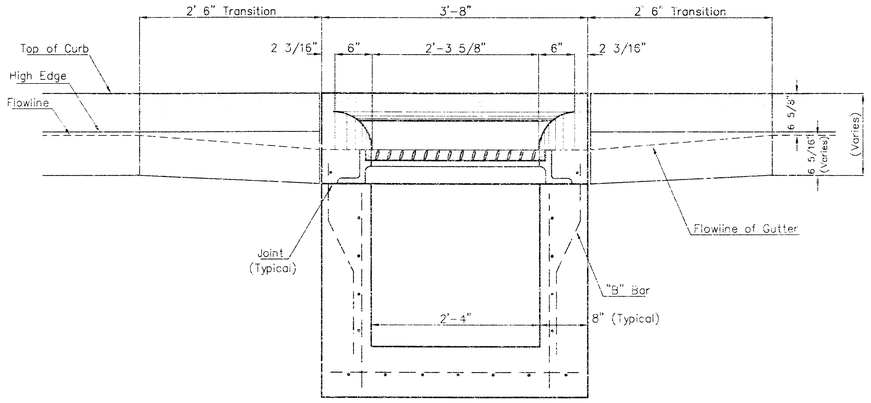

SECTION C-C

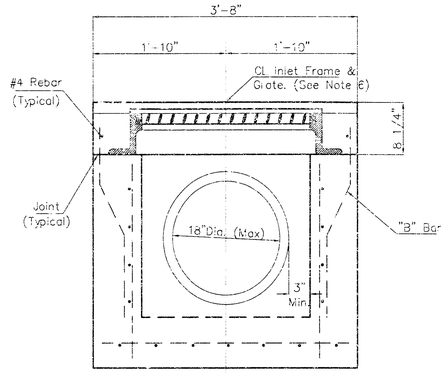

SECTION D-D

REAR WALL

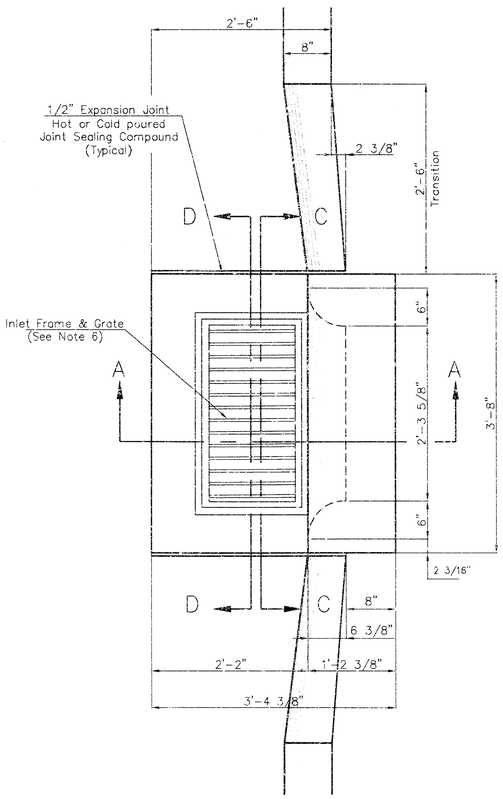

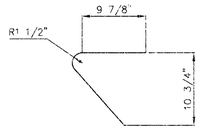

"A" Bar

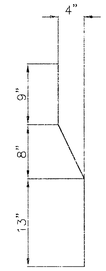

"B" Bar

General Notes

1. Use the concrete mix specified for the City of Wichita concrete pavement througnout. All exposed es shall be finished with an edging tool. Reinforcing bars shall be bent around pipe.
2. Inlet invert shall be shaped with 8 sack mix concrete to create flow channels and to increase hydraulic efficiency such that the inlet will be self cleaning between all inlet and/or outlet pipes.
3. All bars are #4 with 6" spacing and shall have a minimum clearance of 1 1/2" inches unless otherwise noted on the plans.
4. When directed by the Engineer, a small opening may be required in the back of the inlet in order to drain a low area. Reinforcing bars will extend through the openings. No deductions in concrete quantities will be made for these openings.
5. No deductions will be made in pay length of curb, gutter, or curb and gutter through the inlet area.
6. Use Neenah R-3289 HV Single Inlet Frame and Grate or approved equal. Inlet frame to be proof load tested to 40,000 lbs. on unsupported side.
7. Reinforcing bars shall be cut or bent around pipes. No deduction in concrete quantities shall be made for pipe openings.
8. The vanes of the grate shall be oriented with respect to the flow arrows shown on the plans.

THE CITY OF WICHITA
CITY ENGINEER'S OFFICE
CITY HALL - SEVENTH FLOOR
455 NORTH MAIN STREET
WICHITA, KANSAS 67202
(316) 268-4501
(316) 268-4114 FAX

STANDARD TYPE II CURB INLET INLET OPENING = 6"x2'-3 5/8"

M. E. LINDEBAK P.E. - CITY ENGINEER

PROJECT NUMBER 1340 PPS (607861) | CCA #

DATE MAR 96 | SHEET 9 OF 10

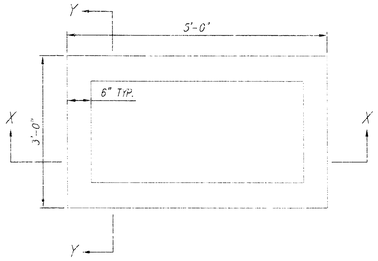

PLAN

NOTE: FRAME AND GRATE TO BE DEETER FOUNDRY 2410 OR APPROVED EQUAL INLET MAY BE PRECAST OR CAST-IN-PLACE.

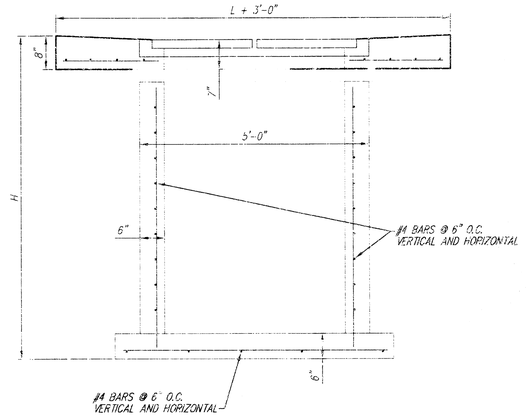

SECTION X-X

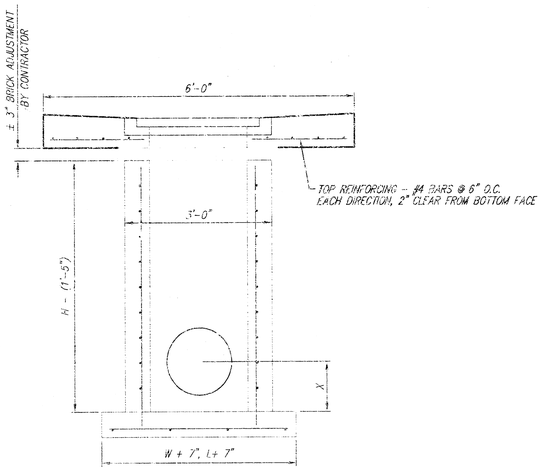

SECTION Y-Y

DOUBLE DROP INLET DETAIL

GENERAL NOTES:

1. MORTAR USED IN MASONRY CONSTRUCTION SHALL CONTAIN 8 SACKS OF CEMENT PER CUBIC YARD. CONCRETE USED IN INLET WALLS AND BASES SHALL CONFORM TO THE REQUIREMENTS FOR CONCRETE PAVEMENT CONSTRUCTION AS SPECIFIED IN THE CITY STANDARD PAVING SPECIFICATIONS, USING CITY CONCRETE PAVEMENT MIX WITHOUT AIR ENTRAINING ADMIXTURE. MORTAR SHALL BE PLACED AROUND THE INLET FRAME AS SHOWN ON THE DRAWINGS WHEN INLETS ARE CONSTRUCTED IN UNPAVED AREAS. COMPLETED INLET SHALL BE WITHOUT LEAKS AND WATER TIGHT.
2. THE FLOORS OF ALL INLETS SHALL BE SHAPED WITH FLOW CHANNELS SUCH THAT THE INLETS WILL BE SELF CLEANING. USING 8-SACK SAND MIX CONCRETE. FLOW CHANNELS SHALL BE FORMED TO MATCH THE BOTTOM HALVES OF THE INFLOWING PIPES AND THE OUTFLOWING PIPE. INLET FLOORS SHALL HAVE SLOPES OF 3 INCHES PER FOOT IN THE AREAS OUTSIDE OF THE FLOW CHANNELS SLOPED TOWARD THE FLOW CHANNELS.
3. INLET COVER CASTINGS AND INLET FRAME CASTINGS SHALL CONFORM TO THE REQUIREMENTS AS INDICATED IN THE STANDARD SPECIFICATIONS AND AS SHOWN IN THE STANDARD DETAIL DRAWING.
4. THE ENDS OF ALL PIPES IN INLETS SHALL BE CUT OFF FLUSH WITH THE INSIDE FACE OF INLET WALL.

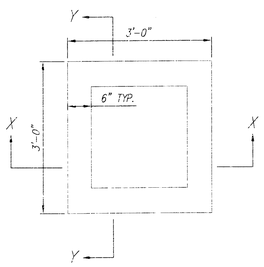

PLAN

NOTE: FRAME AND GRATE TO BE DEETER FOUNDRY 2410 OR APPROVED EQUAL INLET MAY BE PRECAST OR CAST-IN-PLACE.

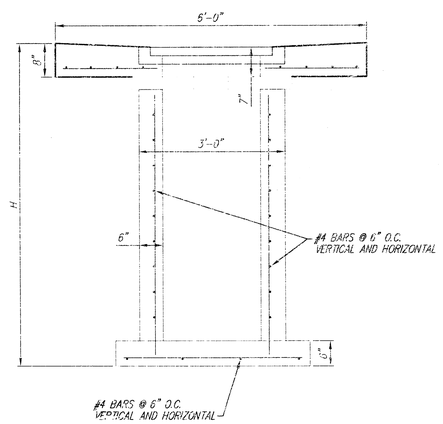

SECTION X-X

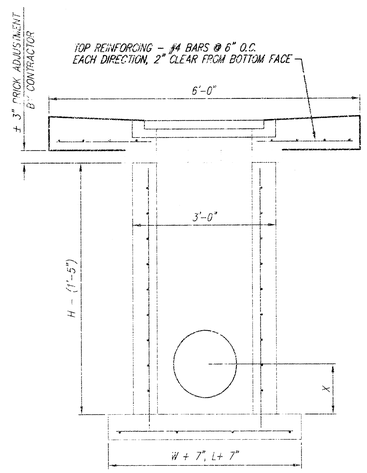

SECTION Y-Y

SINGLE DROP INLET DETAIL

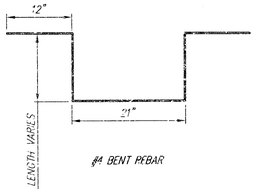

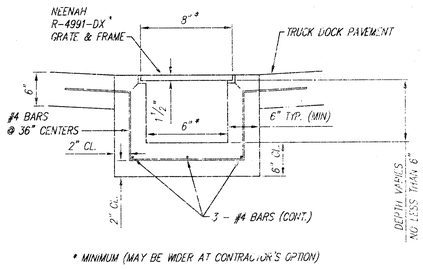

* MINIMUM (MAY BE WIDER AT CONTRACTOR'S OPTION)

TRENCH DRAIN DETAIL

WICHITA NORTH HIGHSCHOOL
DROP INLET/TRENCH DRAIN DETAIL
WICHITA, KANSAS

Ruggles & Bohm, P.A.
Engineering, Surveying, Land Planning
924 North Main
Wichita, Kansas 67203
www.rbkansas.com
(316) 264-8008
(316) 264-4621 fax
E-mail: info@rbkansas.com

DESIGN	TCR
DRAWN	EJB
REVIEW	
UTILITY	
DATE	June 9, 2003
SHEET	10 OF 10
DRAWING FILE	Base (Details)
PROJECT NUMBER	1340 PPS (607861)

IC 14 03 30