APPROVED AS NOTED

BY CITY ENGINEER OF WICHITA

STORM SEWERS VRH 5/27/03

NOTE TO CONTRACTOR

INSPECTION AND TESTING FOR THIS PROJECT IS TO BE PROVIDED BY A LICENSED CONSULTING ENGINEERING FIRM UNDER CONTRACT WITH THE OWNER/DEVELOPER. SAID INSPECTION TO BE IN ACCORDANCE WITH THE CITY OF WICHITA STANDARD CONSTRUCTION ENGINEERING PRACTICES AND CERTIFIED BY A LICENSED PROFESSIONAL ENGINEER. NO WORK SHALL BE PERFORMED IN DEDICATED EASEMENTS OR THE PUBLIC RIGHT-OF-WAY BY THE CONTRACTOR WITHOUT SUCH INSPECTION NOR SHALL ANY WORK BE COMMENCED IN DEDICATED EASEMENTS OR PUBLIC RIGHT-OF-WAY WITHOUT WRITTEN AUTHORIZATION BY THE CITY ENGINEER.

GENERAL NOTES

1. UNLESS SHOWN OR OTHERWISE STATED ON THESE DRAWINGS, MATERIALS AND CONSTRUCTION SHALL BE IN ACCORDANCE WITH THE CITY OF WICHITA STANDARD SPECIFICATIONS.
2. THE TOPS OF INLETS AND MANHOLES AS NOTED ON THE PLANS MAY VARY SO AS TO MEET PROPOSED TOP OF CURB ELEVATIONS OF PAVEMENT ELEVATIONS. THE FIELD ENGINEER SHALL LOCATE INLETS AND MANHOLES WITH REFERENCE TO PROPOSED PAVING PLANS OF THE PERTINENT STREETS.
3. ALL CONCRETE SHALL BE STANDARD PAVING MIX UNLESS OTHERWISE NOTED.
4. THE CONTRACTOR SHALL BE RESPONSIBLE FOR PRESERVING PROPERTY IRONS. THE CONTRACTOR SHALL BE REQUIRED TO RE-ESTABLISH ANY PROPERTY IRONS WHICH ARE DAMAGED OR DESTROYED BY HIS CONSTRUCTION OPERATIONS. SUCH IRONS SHALL BE RE-ESTABLISHED BY A LICENSED LAND SURVEYOR IN ACCORDANCE WITH STATE LAWS.
5. TREES TO BE REMOVED ARE MARKED ⊗. ALL TREES WHICH IN THE OPINION OF THE FIELD ENGINEER CAN BE SAVED, SHALL BE SAVED.
6. CONTRACTOR SHALL NOTIFY UTILITY COMPANIES OF CONSTRUCTION SCHEDULING.
7. EXISTING UTILITIES AND THEIR LOCATIONS, AS SHOWN ON THE PLANS REPRESENT THE BEST INFORMATION OBTAINABLE FOR DESIGN. LOCATION INFORMATION HAS BEEN OBTAINED FROM THE VARIOUS COMPANIES AND IS EITHER FROM COMPANY UTILITY DRAWINGS OR COMPANY PROVIDED FIELD LOCATIONS. THE PLAN LOCATIONS SHOWN ARE NOT GUARANTEED. ADDITIONAL EXISTING UTILITIES MAY ALSO BE ENCOUNTERED.
8. CONTRACTOR WILL BE REQUIRED TO PROVIDE A MINIMUM ADVANCE NOTICE OF SEVENTY-TWO (72) HOURS TO UTILITY COMPANIES TO STARTING ANY EXCAVATION AS FOLLOWS:

   KANSAS ONE-CALL 800-344-7233 OR 687-2470 (LOCAL WICHITA)

   THE CONTRACTOR MUST NOTIFY THE FOLLOWING IN CASE OF EMERGENCY:

COX COMMUNICATIONS (CABLE)	262-0061
WESTAR (ELECTRIC)	261-6512
KANSAS GAS SERVICE (GAS)	832-3101
SBC (TELEPHONE)	800-870-8390
CITY OF WICHITA WATER & SEWER	262-5000
AQUILA (GAS)	946-0096

9. RUBBLE FROM THE REMOVAL OF MISCELLANEOUS STRUCTURES AND EXCESS EXCAVATION WHICH IS TO BE WASTED SHALL BE DISPOSED OF ON SITES TO BE PROVIDED BY THE CONTRACTOR. THESE SITES SHALL BE APPROVED BY THE ENGINEER AS TO SUITABILITY, APPEARANCE AND SITE LOCATION. LOCATIONS THAT, IN THE OPINION OF THE ENGINEER, WILL LEAVE AN UNSIGHTLY APPEARANCE WILL NOT BE APPROVED. ALL DISPOSAL SITES MUST BE APPROVED BY THE KANSAS DEPARTMENT OF HEALTH AND ENVIRONMENT. MATERIAL EITHER STOCKPILED OR DISPOSED OF IN A FLOOD PLAIN WOULD REQUIRE A KANSAS STATE BOARD OF AGRICULTURE PERMIT. ANY MATERIAL DUMPED IN WATERS OF THE UNITED STATES OR WETLANDS IS SUBJECT TO U.S. CORPS OF ENGINEERS PERMITTING REGULATIONS. ANY MATERIAL BURIED OR STOCKPILED BEYOND APPROVED CONSTRUCTION LIMITS WOULD REQUIRE ADDITIONAL ARCHAEOLOGICAL INVESTIGATIONS UNLESS BURIED IN A PREVIOUSLY APPROVED BORROW LOCATION.
10. CONTRACTOR SHALL RESEED AND MULCH ALL DISTURBED AREAS. COST SHALL BE CONSIDERED SUBSIDIARY TO SITE RESTORATION.

PRIVATE STORM WATER SEWER PLANS FOR

HANLEY COMMERCIAL ADDITION

AN ADDITION TO THE CITY OF WICHITA

SEDGWICK COUNTY, KANSAS

JIM ARMOUR, P.E. - ACTING CITY ENGINEER

PRIVATE PROJECT NO. 1339PPS (607861)

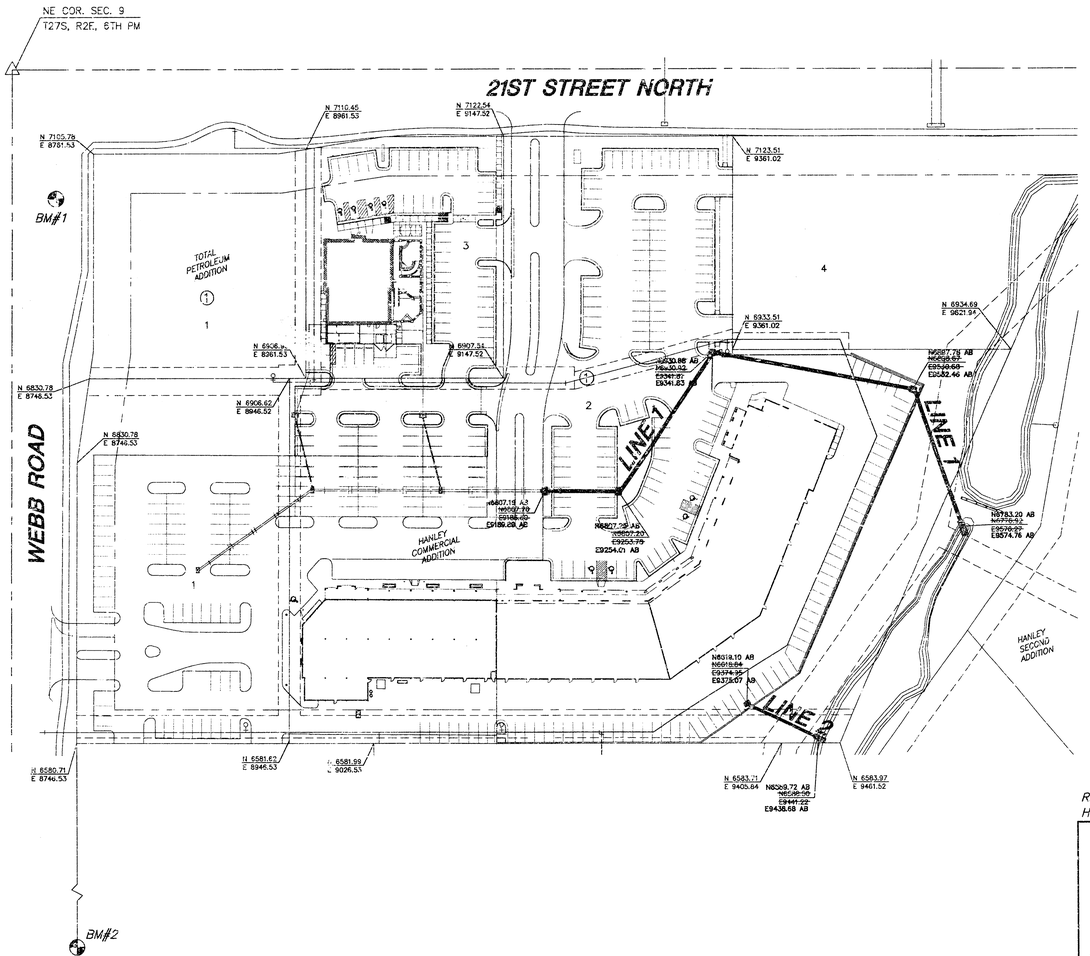

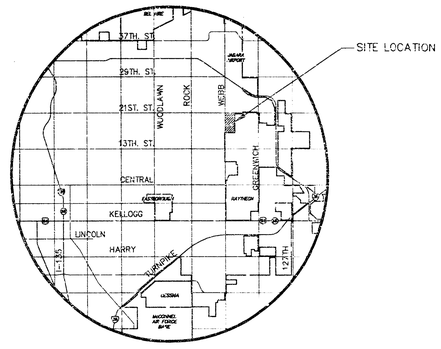

LOCATION MAP

INDEX TO DRAWINGS

SHEET NO.	DESCRIPTION
1	TITLE SHEET
2-3	INLET DETAILS
4-5	LINES 1 & 2
6	EARTHWORK
7-10	BMPS
11	FINAL PLAT

N

SCALE: 1" = 60'

BENCHMARK

BM#1 "T" CUT TOP OF CURB, EAST SIDE OF WEBB RD. ±115' SOUTH OF THE CENTERLINE OF 21ST STREET NORTH. ELEV. = 202.85

BM#2 "T" CUT TOP OF CURB, NORTHEAST CORNER OF REINFORCED CONCRETE BOX HEADWALL 853' SOUTH AND 50' EAST 21ST STREET NORTH WEBB RD. ELEV. = 198.02

AS-BUILT: OCTOBER 2004

REVISED: MAY 2004 - CHANGE INLET TYPE AND LOCATION

H:\CIVIL\01168\DWG\PH2\SWS\CONSTRUCTION_DWGS_9_10_04\AS-BUILT\01168_DT

MKEC ENGINEERING CONSULTANTS

411 N. WEBB ROAD

WICHITA, KS. 67206

316-684-9600

HANLEY COMMERCIAL ADDITION
PROJECT NAME

TITLE SHEET
SHEET TITLE

MKEC	DAC	JTC
DESIGN BY:	DRAWN BY:	CHECKED BY:
MARCH 2004	01168_DT	1 / 11
DATE	DRAWING NAME	SHEET / OF

C:\Civil\01168\dwg\ph2\sws\construction_dwgs_9_10_04\01168_dt

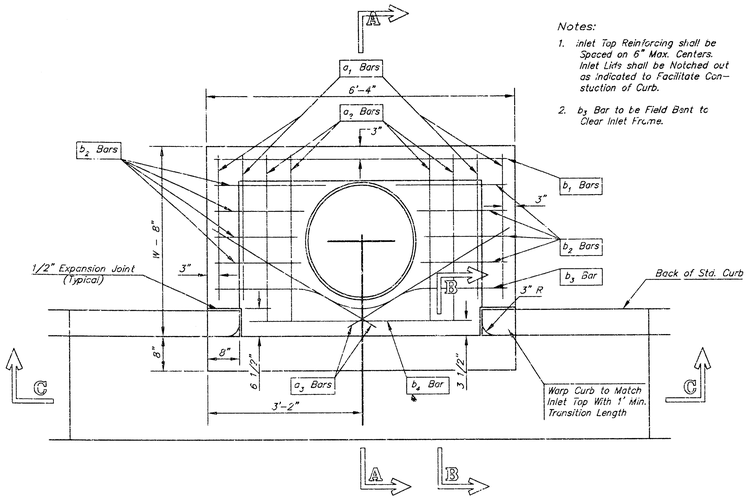

PLAN

Notes:

1. Inlet Top Reinforcing shall be Spaced on 6" Max. Centers. Inlet Lids shall be Notched out as Indicated to Facilitate Construction of Curb.
2. b_3 Bar to be Field Bent to Clear Inlet Frame.

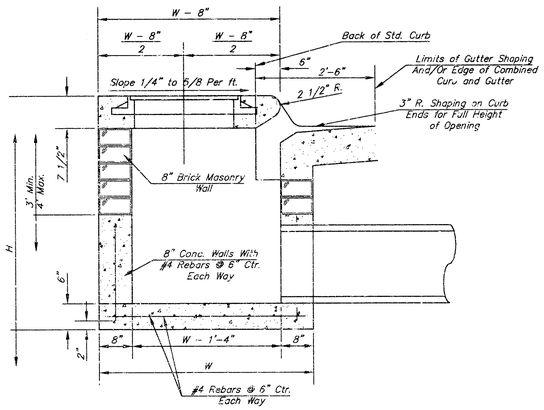

SECTION A–A

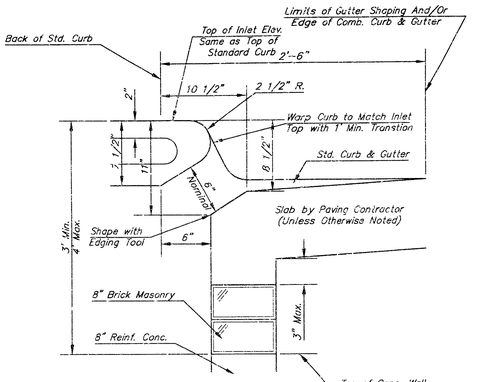

SECTION B–B

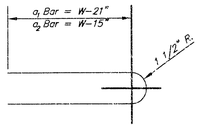

BENDING DIAGRAM

GENERAL NOTES

1. Concrete tops to be installed on thin mortar cushion to insure full support along brick walls. Concrete tops may be cast in place or precast. Concrete used for inlet construction shall be concrete pavement mix.
2. Contractor shall have the option of constructing 8" brick masonry walls between the concrete inlet base and top on this inlet when W=6'-4" and H=7'-0" or less.
3. Inlet invert shall be shaped with 8 sack sand mix concrete to create flow channels and to increase hydraulic efficiency such that the inlet will be self cleaning between all inlet and/or outlet pipes.
4. The ends of all pipes installed in inlets shall be cut off flush with the inside face of the inlet wall.

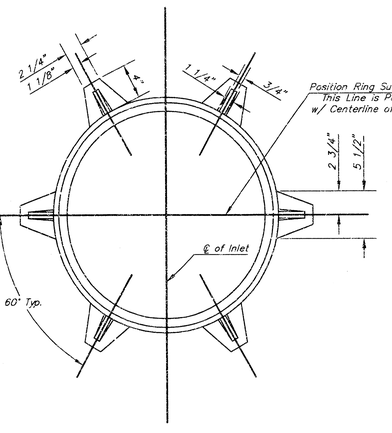

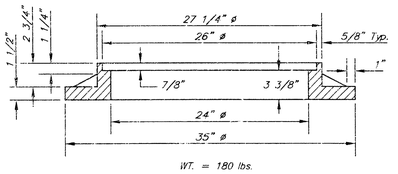

WT. = 180 lbs.

MANHOLE RING AND COVER

*See City of Wichita Standard Manhole Ring and Cover Detail Sheet for Cover Details to Be Used With Inlet Frame.

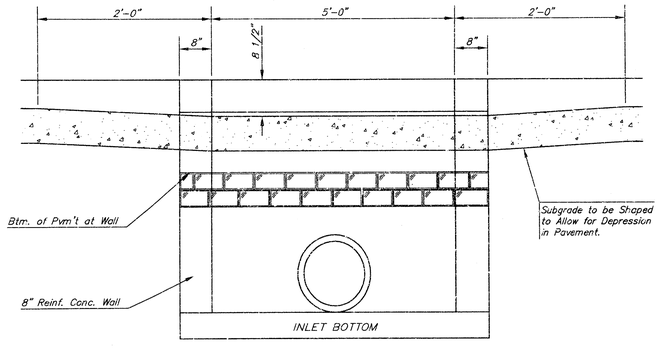

SECTION C–C

STEEL SCHEDULE

BAR		a_1	a_2	a_3	b_1 W=4'-4"	b_1 W=5'-4"	b_1 W=6'-4"	b_1 W=7'-4"	b_1 W=8'-4"	b_2	b_3	b_4	Wt. Lbs.
NUMBER		4	4	2	1	3	5	7	9	6	1	1	
SIZE		#4	#4	#4	#4	#4	#4	#4	#4	#4	#4	#6	
LENGTH	W=4'-4"	5'-7"	6'-7"	4'-0"	6'-1"	–	–	–	–	1'-9"	6'-2"	4'-8"	60±
	W=5'-4"	7'-7"	8'-7"	5'-0"	–	6'-1"	–	–	–	1'-9"	5'-2"	4'-8"	81±
	W=6'-4"	9'-7"	10'-7"	6'-0"	–	–	6'-1"	–	–	1'-9"	6'-2"	4'-8"	101±
	W=7'-4"	11'-7"	12'-7"	7'-0"	–	–	–	6'-1"	–	1'-9"	6'-2"	4'-8"	121±
	W=8'-4"	13'-7"	14'-7"	8'-0"	–	–	–	–	6'-1"	1'-9"	6'-2"	4'-8"	141±

Note: a_3 Bars to be Placed Approx. 2" Below Top of Inlet Cover.

STANDARD CURB INLET PRECAST TOPS			
W	PRE-CAST TOP SIZE	PIPE SIZE	CU. YD. CONC.
4'-4"	3'-8" 6'-4" 7 1/2"	21" & SMALLER	0.38±
5'-4"	4'-8" 6'-4" 7 1/2"	24" & 30"	0.51±
6'-4"	5'-8" 6'-4" 7 1/2"	36" & 42"	0.64±
7'-4"	6'-8" 6'-4" 7 1/2"	48" & 54"	0.77±
8'-4"	7'-8" 6'-4" 7 1/2"	60" & 66"	0.90±

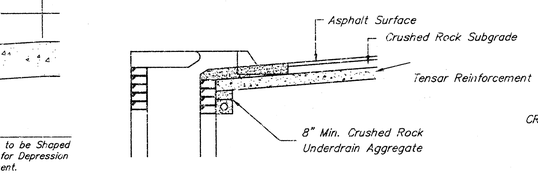

CRUSHED ROCK GRADATION REQUIREMENTS

Percent of Aggregate Retained

1 1/2"	0
3/4"	15–60
# 4	40–80
#40	74–92
P–200	4–12

Rock Quality Shall Be The Same As Specified For Coarse Aggregate For Asphalt Concrete Mixes.

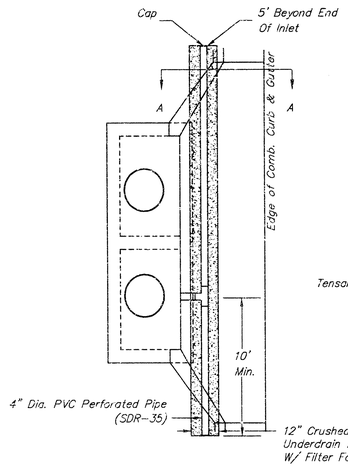

Type 1–A Inlet

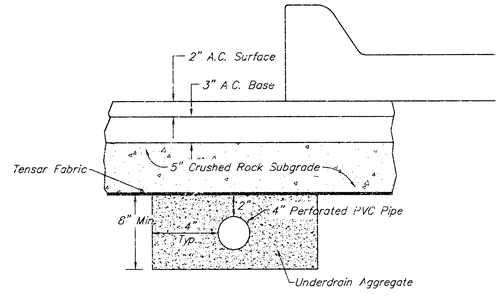

NOTE: Place 4" PVC Perforated Pipe at all drainage sump locations.

Cost of Underdrain System to be Subsidiary to the Inlet Structure.

PAVEMENT UNDERDRAIN DETAIL

THE CITY OF WICHITA

CITY ENGINEER'S OFFICE
CITY HALL — SEVENTH FLOOR
455 NORTH MAIN STREET
WICHITA, KANSAS 67202
(316) 268-4501
(316) 268-4114 FAX

STANDARD TYPE 1 CURB INLET OPENING = 6" x 5'-0"

M. E. LINDEBAK P.E. – CITY ENGINEER

PROJECT NUMBER	INDEX CODE
1339 PPS	607861
DATE: MAR 96	SHEET 2 OF 10

HANLEY COMMERICAL ADD.
STORM WATER SEWER
LINE 1 - Revised MAY 2004

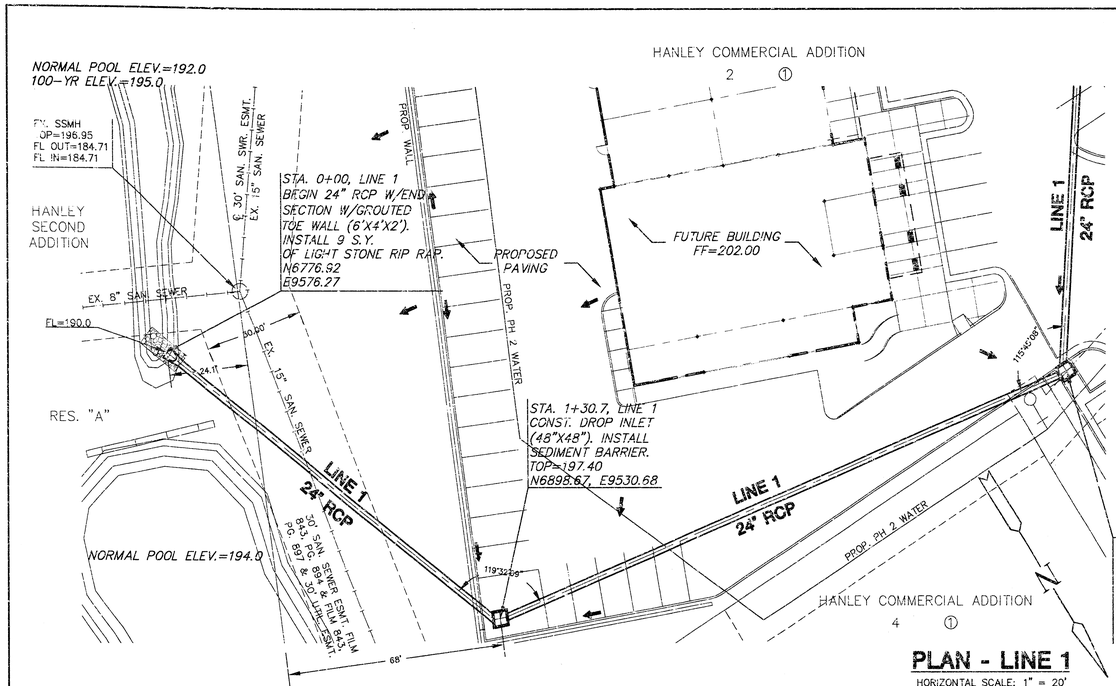

PLAN - LINE 1

HORIZONTAL SCALE: 1" = 20'

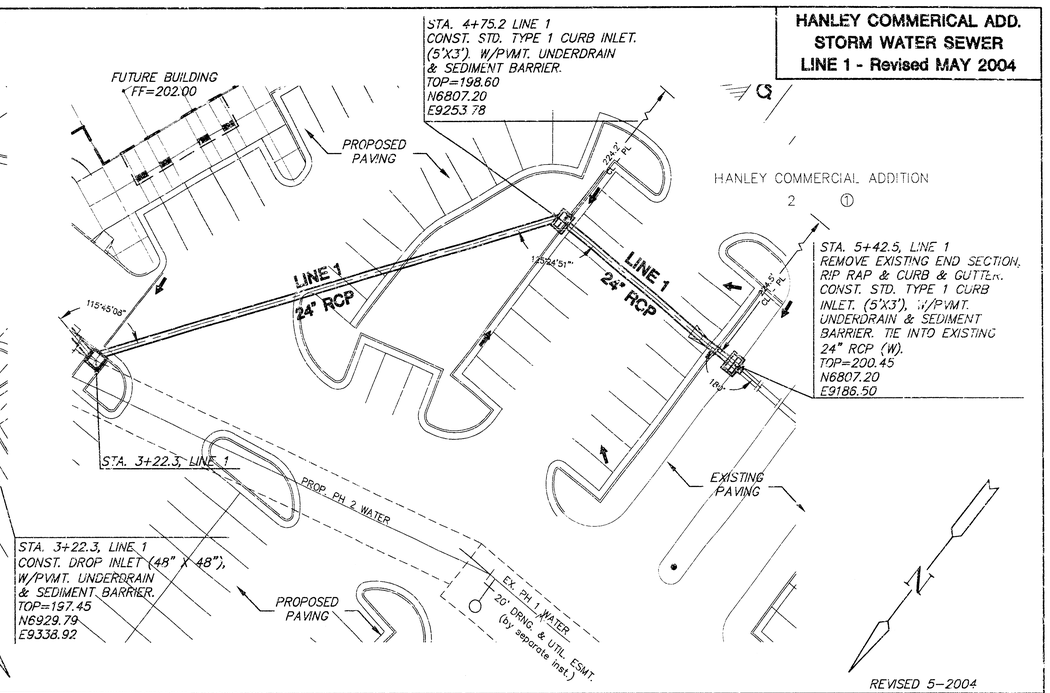

REVISED 5-2004

PROFILE - LINE 1

HORIZONTAL SCALE: 1" = 20'
VERTICAL SCALE: 1" = 5'

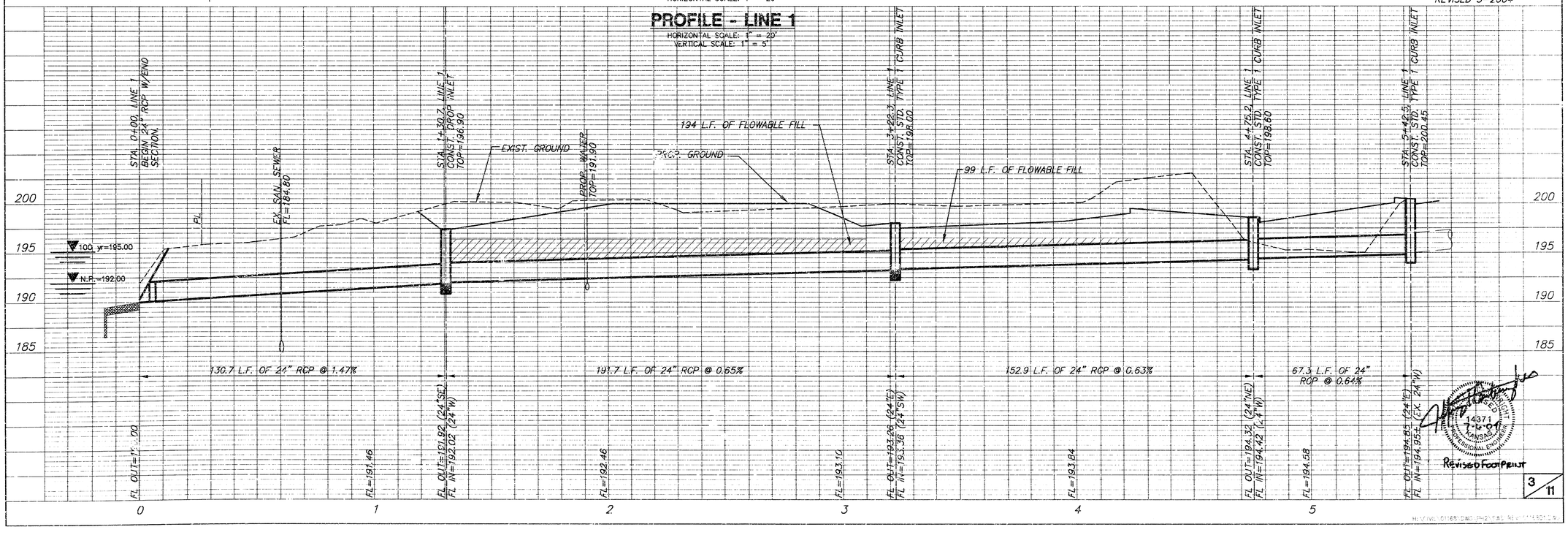

REVISED FOOTPRINT

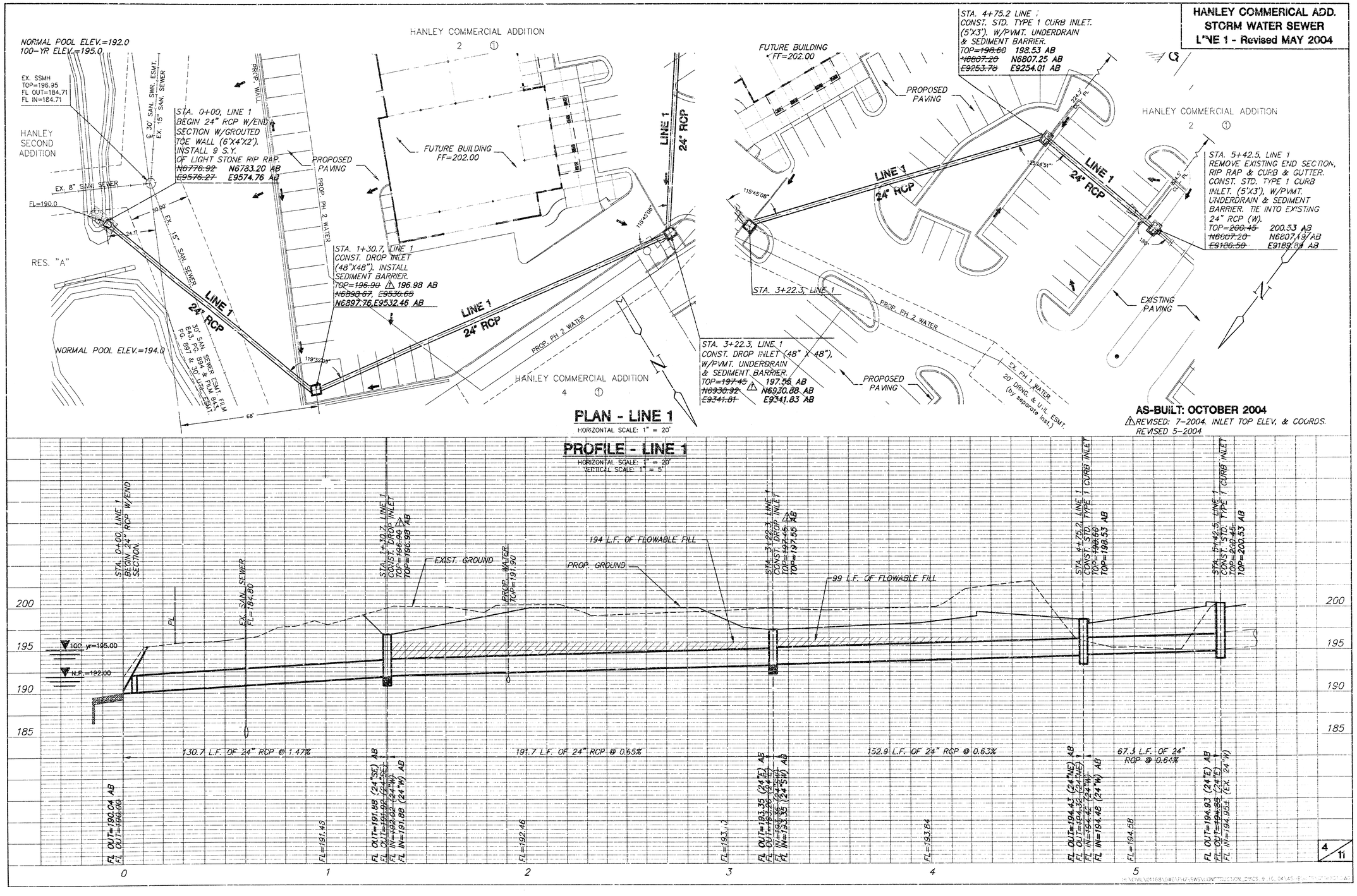
HANLEY COMMERICAL ADD.
STORM WATER SEWER
LINE 1 - Revised MAY 2004
NORMAL POOL ELEV.=192.0
100-YR ELEV.=195.0
EX. SSMH
TOP=196.95
FL OUT=184.71
FL IN=184.71
HANLEY SECOND ADDITION
EX. 8" SAN. SEWER
FL=190.0
RES. "A"
NORMAL POOL ELEV.=194.0
30' SAN. SEWER ESMT. FILM 843, PG. 894 & FILM 843, PG. 897 & 30' UTIL. ESMT.
EX. 15" SAN. SEWER
30' SAN. SWR. ESMT.
EX. 15" SAN. SEWER
STA. 0+00, LINE 1
BEGIN 24" RCP W/END SECTION W/GROUTED TOE WALL (6'X4'X2'). INSTALL 9 S.Y. OF LIGHT STONE RIP RAP.
N6776.92 N6783.20 AB
E9576.27 E9574.76 AB
PROP. WALL
PROPOSED PAVING
PROP. PH 2 WATER
HANLEY COMMERCIAL ADDITION
2 ①
FUTURE BUILDING
FF=202.00
STA. 1+30.7, LINE 1
CONST. DROP INLET (48"X48"). INSTALL SEDIMENT BARRIER.
TOP=196.90 196.98 AB
N6898.67, E9530.68
N6897.76, E9532.46 AB
LINE 1
24" RCP
PROP. PH 2 WATER
HANLEY COMMERCIAL ADDITION
4 ①
68'
STA. 3+22.3, LINE 1
CONST. DROP INLET (48" X 48"), W/PVMT. UNDERDRAIN & SEDIMENT BARRIER.
TOP=197.45 197.55 AB
N6930.92 N6930.88 AB
E9341.81 E9341.83 AB
PROPOSED PAVING
EX. FH 1 WATER
20' DRNG. & UTIL. ESMT. (by separate inst.)
STA. 4+75.2 LINE 1
CONST. STD. TYPE 1 CURB INLET. (5'X3'). W/PVMT. UNDERDRAIN & SEDIMENT BARRIER.
TOP=198.60 198.53 AB
N6807.20 N6807.25 AB
E9253.78 E9254.01 AB
FUTURE BUILDING
FF=202.00
PROPOSED PAVING
HANLEY COMMERCIAL ADDITION
2 ①
STA. 5+42.5, LINE 1
REMOVE EXISTING END SECTION, RIP RAP & CURB & GUTTER. CONST. STD. TYPE 1 CURB INLET. (5'X3'), W/PVMT. UNDERDRAIN & SEDIMENT BARRIER. TIE INTO EXISTING 24" RCP (W).
TOP=200.45 200.53 AB
N6807.20 N6807.19 AB
E9186.50 E9189.89 AB
EXISTING PAVING
AS-BUILT: OCTOBER 2004
REVISED: 7-2004, INLET TOP ELEV. & COORDS.
REVISED 5-2004
PLAN - LINE 1
HORIZONTAL SCALE: 1" = 20'
PROFILE - LINE 1
HORIZONTAL SCALE: 1" = 20'
VERTICAL SCALE: 1" = 5'
STA. 0+00, LINE 1
BEGIN 24" RCP W/END SECTION.
EX. SAN. SEWER
FL=184.80
STA. 1+30.7, LINE 1
CONST. DROP INLET
TOP=196.90
TOP=196.98 AB
EXIST. GROUND
PROP. WATER
TOP=191.90
194 L.F. OF FLOWABLE FILL
PROP. GROUND
STA. 3+22.3, LINE 1
CONST. DROP INLET
TOP=197.45
TOP=197.55 AB
99 L.F. OF FLOWABLE FILL
STA. 4+75.2, LINE 1
CONST. STD. TYPE 1 CURB INLET
TOP=198.60
TOP=198.53 AB
STA. 5+42.5, LINE 1
CONST. STD. TYPE 1 CURB INLET
TOP=200.45
TOP=200.53 AB
100 yr=195.00
N.P.=192.00
200
195
190
185
130.7 L.F. OF 24" RCP @ 1.47%
191.7 L.F. OF 24" RCP @ 0.65%
152.9 L.F. OF 24" RCP @ 0.63%
67.3 L.F. OF 24" RCP @ 0.64%
FL OUT=190.04 AB
FL OUT=190.00
FL=191.45
FL OUT=191.88 (24"SE) AB
FL OUT=191.92 (24"SE)
FL IN=192.02 (24"W)
FL IN=191.88 (24"W) AB
FL=192.46
FL=193.13
FL OUT=193.35 (24"E) AB
FL OUT=193.26 (24"E)
FL IN=193.36 (24"SW)
FL IN=193.35 (24"SW) AB
FL=193.84
FL OUT=194.43 (24"NE) AB
FL OUT=194.32 (24"NE)
FL IN=194.42 (24"W)
FL IN=194.48 (24"W) AB
FL=194.58
FL OUT=194.93 (24"E) AB
FL OUT=194.88 (24"E)
FL IN=194.95± (EX. 24"W)
0
1
2
3
4
5
4
11

HANLEY COMMERICAL ADD.
STORM WATER SEWER
LINE 2 - Revised

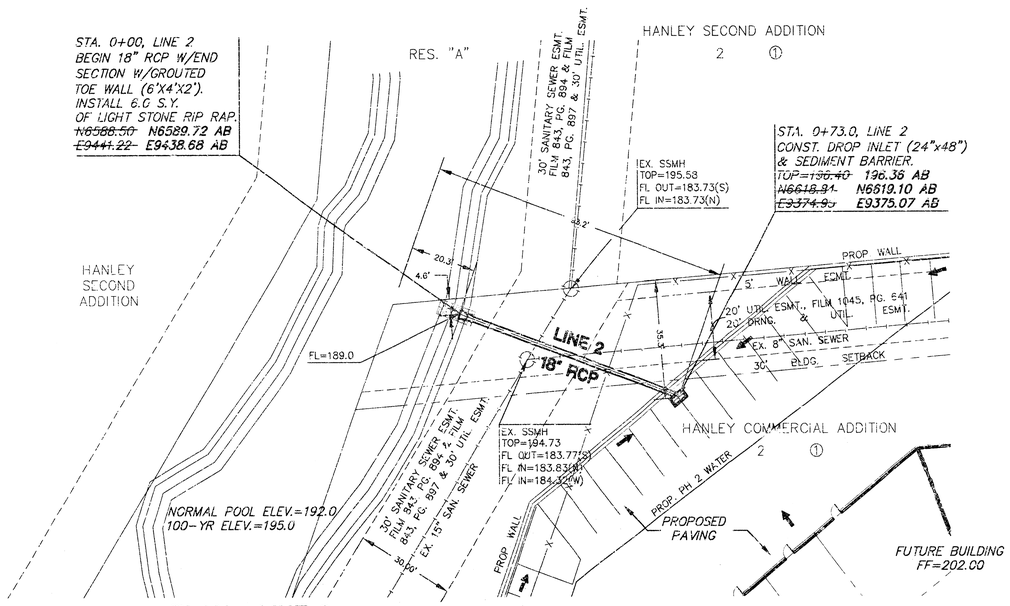

PLAN - LINE 2

HORIZONTAL SCALE: 1" = 20'

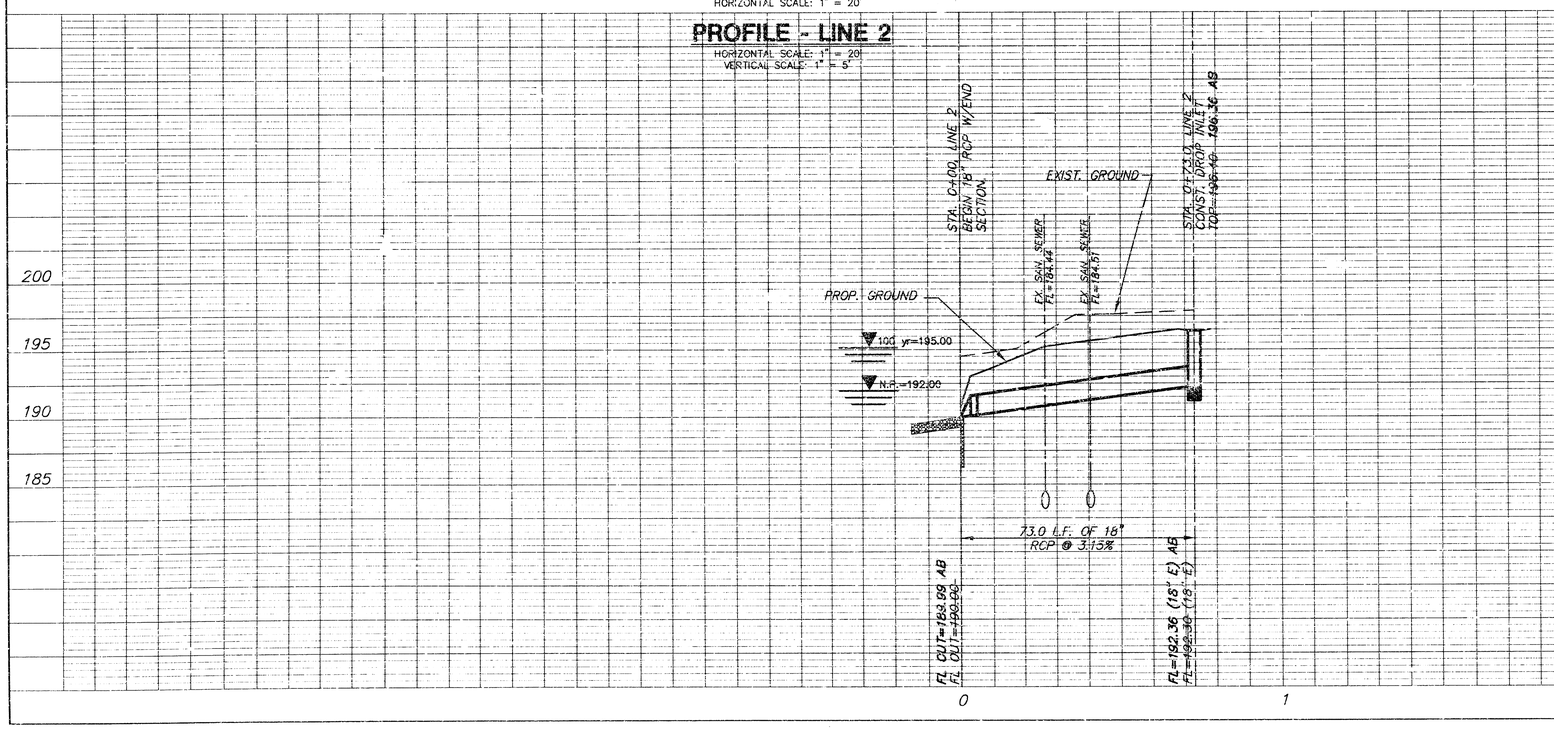

AS-BUILT: OCTOBER 2004

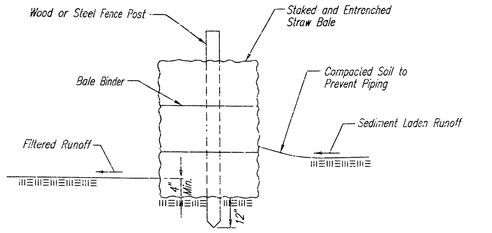

STRAW BALE BARRIERS

Material Specification:

Bale slope barriers may be constructed of wheat straw, oat straw, prairie hay, or bromegrass hay that is free of weeds declared noxious by the Kansas State Board of Agriculture.
The stakes used to anchor the bales should be a hardwood material with the following minimum dimensions: 2" square (nominal) by 4' long.

Placement:

A slope barrier should be used at the toe of a slope when a ditch does not exist. The slope barrier should be placed on nearly level ground 5' to 10' away from the toe of a slope. The barrier is placed away from the toe of the slope to provide adequate storage for settling out sediment.
When practicable, bale slope barriers should be placed along contours to avoid a concentration of flow.
Bale slope barriers can also be placed along right-of-way fence lines to keep sediment from crossing onto adjacent property. When placed in this manner, the slope barrier will not likely follow contours.

Proper installation method:

Excavate a trench the length of the planned slope barrier that is 4" deep and a bale's width wide. Make sure that the trench is excavated along a single contour. When practicable, slope barriers should be placed along contours to avoid a concentration of flow. Place the soil on the upslope side of the trench for later use.
Place the bales in the trench, making sure that they are butted tightly. Two stakes should be driven through each bale along the centerline of the ditch check, approximately 6" to 8" in from the bale ends. Stakes should be driven at least 12" into the ground.
Once all the bales have been installed and anchored, place the excavated soil against the upslope side of the check and compact it. The compacted soil should be no more than 3" to 4" deep.

List of common placement/installation mistakes to avoid:

When practicable, do not place bale slope barriers across contours. Slope barriers should be placed along contours to avoid a concentration of flow. Concentrated flow over a slope barrier creates a scour hole on the downslope side of the barrier. The scour hole eventually undermines the bales and the barrier fails.
Do not place bale slope barriers in areas with shallow soils underlain by rock. If the barrier is not anchored sufficiently, it will wash out.
Bale slope barriers must be dug into the ground. Bales at ground level do not work because they allow water to flow under the barrier.

Inspection and Maintenance:

Bale slope barriers should be inspected every 7 days and within 24 hours of a rainfall of 1/2" or more. The following is a list of questions that should be addressed during each inspection:

Are there any points along the slope barrier where water is concentrating?
Does water flow under the slope barrier?
Does water flow through spaces between abutting bales?
Are any bales dislodged?
Are bales decomposing due to age and/or water damage?
Does sediment need to be removed from behind the slope barrier?

NOTE: Point A must be higher than Point B so that water flows over the bales and not around them.

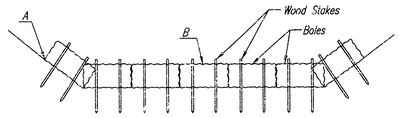

STRAW BALE DITCH CHECKS

Material Specification:

Bale ditch checks may be constructed of wheat straw, oat straw, prairie hay, or bromegrass hay that is free of weeds declared noxious by the Kansas State Board of Agriculture.
The stakes used to anchor the bales should be a hardwood material with the following minimum dimensions: 2" square (nominal) by 4' long.
Optional: Use a downstream scour apron should be constructed of a double-netted straw erosion-control blanket at least 6' wide.
Optional: The metal landscape staples used to anchor the erosion-control blanket should be at least 8" long.

Placement:

Bale ditch checks should be placed perpendicular to the flowline of the ditch.
The ditch check should extend far enough so that the ground level at the ends of the check is higher than the top of the lowest center bale. This prevents water from flowing around the check.
Checks should not be placed in ditches where high flows are expected. Rock checks should be used instead.
Bales should be placed in ditches with slopes of 6% or less. For slopes steeper than 6%, rock checks should be used.
The following table provides check spacing for a given ditch grade:

Ditch Check Spacing

Ditch grade (%)	Check Spacing (feet)
0.5	200
1.0	200
2.0	100
3.0	65
4.0	50
5.0	40
6.0	30

Proper installation method:

Excavate a trench perpendicular to the ditch flowline that is 4" deep and a bale's width wide. Extend the trench in a straight line along the entire length of the proposed ditch check. Place the soil on the upstream side of the trench-it will be used later.
Optional: On the downstream side of the trench, roll out a length of erosion-control blanket (scour apron) equal to the length of the trench. Place the upstream edge of the erosion-control blanket along the bottom upstream edge of the trench. The erosion control blanket should be anchored in the trench with one row of 8" landscape staples placed on 18" centers. The remainder of the erosion-control blanket (the portion that is not lying in the trench) will serve as the downstream scour apron. This section of the blanket should be anchored to the ground with 8" landscape staples placed around the perimeter of the blanket on 18" centers. The remainder of the blanket should be anchored using two evenly spaced rows of 8" landscape staples on 18" centers placed perpendicular to the flowline of the ditch.
Place the bales in the trench, making sure that they are butted tightly. Two stakes should be driven through each bale along the centerline of the ditch check, approximately 6" to 8" in from the bale ends. Stakes should be driven at least 12" into the ground.
Once all the bales have been installed and anchored, place the excavated soil against the upstream side of the check and compact it. The compacted soil should be no more than 3" to 4" deep and extend upstream no more than 24".

List of common placement/installation mistakes to avoid:

Do not place a bale ditch check directly in front of a culvert outlet. It will not stand up to the concentrated flow.
Do not place bale ditch checks in ditches that will likely experience high flows. They will not stand up to concentrated flow.
Follow prescribed ditch-check spacing guidelines. If spacing guidelines are exceeded, erosion will occur between the ditch checks.
Do not allow water to flow around the ditch check. Make sure that the ditch check is long enough so that the ground level at the ends of the check is higher than the top of the lowest center bale.
Do not place bale ditch checks in channels with shallow soils underlain by rock. If the check is not anchored sufficiently, it will wash out.
Bale ditch checks must be dug into the ground. Bales at ground level do not work because they allow water to flow under the check.

Inspection and Maintenance:

Bale ditch checks should be inspected every 7 days and within 24 hours of a rainfall of 1/2" or more. The following is a list of questions that should be addressed during each inspection:

Does water flow around the ditch check?
Does water flow under the ditch check?
Does water flow through spaces between abutting bales?
Are any bales and/or scour aprons (optional) dislodged?
Are bales decomposing due to age and/or water damage?
Does sediment need to be removed from behind the ditch check?

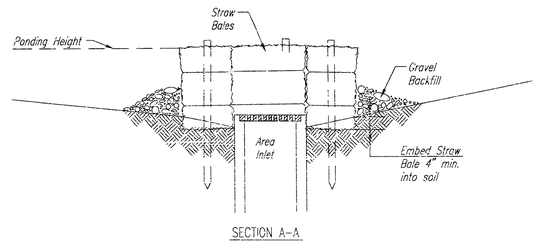

SECTION A-A

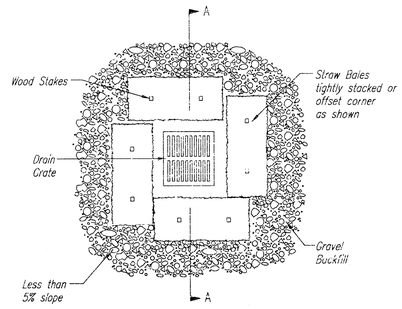

STRAW BALE BARRIERS FOR AREA INLETS
(INLET PROTECTION)

Material Specification:

Bale area inlet barriers should be constructed of wheat straw, oat straw, prairie hay, or bromegrass hay that is free of weeds declared noxious by the Kansas State Board of Agriculture.
The stakes used to anchor the bales should be a hardwood material with the following minimum dimensions: 2" square (nominal) by 4' long.

Placement:

Bale area inlet barriers should be placed directly around the perimeter of a drop inlet.
When a bale area inlet barrier is located near an inlet that has steep approach slopes, the storage capacity behind the barrier is drastically reduced. Timely removal of sediment must occur for a barrier to operate properly in this location.

Proper Installation Method:

Excavate a trench around the perimeter of the area inlet that is at least 4" deep by a bale's width wide.
Place the bales in the trench, making sure that they are butted tightly. Some bales may need to be shortened to fit into the trench around the area inlet. Two stakes should be driven through each bale, approximately 6" to 8" in from the bale ends.
Stakes should be driven at least 12" into the ground.
Once all the bales have been installed and anchored, place the excavated soil against the receiving side of the barrier and compact it. The compacted soil should be no more than 3" to 4" deep.
Note: When a bale area inlet barrier is placed in a shallow median ditch, make sure that the top of the barrier is not higher than the paved road. In this configuration, water may spread onto the roadway causing a hazardous condition.

List of common placement installation mistakes to avoid:

Bales should be placed directly against the perimeter of the area inlet. This allows overtopping water to flow directly into the inlet instead of onto nearby soil causing scour.
Bale area inlet barriers must be dug into the ground. Bales at ground level do not work because they allow water to flow under the barrier.

Inspection and Maintenance:

Bale area inlet barriers should be inspected every 7 days and within 24 hours of a rainfall 1/2" or more. The following is a list of questions that should be addressed during each inspection:

Does water flow under the area inlet barrier?
Does water flow through spaces between abutting bales?
Are any bales dislodged?
Are bales decomposing due to age and/or water damage?
Does sediment need to be removed from behind the area inlet barrier?

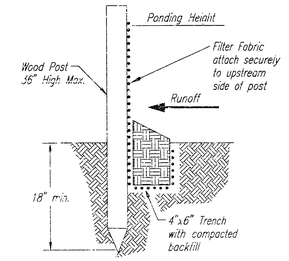

SILT FENCE BARRIERS

SILT FENCE BARRIERS

Material Specification:

Silt fence fabric should conform to the AASHTO M288 96 silt fence specification.
The posts used to support the silt fence fabric should be a hardwood material with the following minimum dimensions: 2" square (nominal) by 4' long.
Silt fence fabric should be attached to the wooden posts with staples, wire, zip ties, or nails.

Placement:

A slope barrier should be used at the toe of a slope when a ditch does not exist. The slope barrier should be placed on nearly level ground 5' to 10' away from the toe of a slope. The barrier is placed away from the toe of the slope to provide adequate storage for settling out sediment.
When practicable, silt fence slope barriers should be placed along contours to avoid a concentration of flow.
Silt fence slope barriers can also be placed along right-of-way fence lines to keep sediment from crossing onto adjacent property. When placed in this manner, the slope barrier will not likely follow contours.

Proper installation method:

Excavate a trench the length of the planned slope barrier that is 6" deep by 4" wide.
Make sure that the trench is excavated along a single contour. When practicable, slope barriers should be placed along contours to avoid a concentration of flow. Place the soil on the upslope side of the trench for later use.
Roll out a continuous length of silt fence fabric on the downslope side of the trench.
Place the edge of the fabric in the trench starting at the top upslope edge. Line all three sides of the trench with the fabric. Backfill over the fabric in the trench with the excavated soil and compact. After filling the trench, approximately 24" to 36" of silt-fence fabric should remain exposed.
Lay the exposed silt fence upslope of the trench to clear an area for driving in the posts.
Just downslope of the trench, drive posts into the ground to a depth of at least 18".
Place posts no more than 4' apart
Attach the silt fence to the anchored post with staples, wire, zip ties, or nails.

List of common placement/installation mistakes to avoid:

When practicable, do not place silt fence slope barriers across contours. Slope barriers should be placed along contours to avoid a concentration of flow. When the flow concentrates, it overtops the barrier and the silt fence slope barrier quickly deteriorates.
Do not place silt-fence posts on the upslope side of the silt fence fabric. In this configuration, the force of the water is not restricted by the posts, but only by the staples (wire, zip ties, nails, etc.). The silt fence will rip and fail.
Do not place silt fence slope barriers in areas with shallow soils underlain by rock. If the barrier is not sufficiently anchored, it will wash out.
Silt fence slope barriers must be dug into the ground-silt fence at ground level does not work because water will flow underneath.

inspection and Maintenance:

Silt fence slope barriers should be inspected every 7 days and within 24 hours of a rainfall of 1/2" or more. The following is a list of questions that should be addressed during each inspection:

Are there any points along the slope barrier where water is concentrating?
Does water flow under the slope barrier?
Do the silt fences sag excessively?
Has the silt fence torn or become detached from the posts?
Does sediment need to be removed from behind the slope barrier?

CITY OF WICHITA

SOIL EROSION BMP DETAILS

CHRISTOPHER M. CARRIER, P.E.
STORM WATER ENGINEER

PROJECT NUMBER	OCA NO.
1339PPS	607861
DATE: MAY 2003	SHEET 6 OF 10

H:\CIVIL\01168\DWGS\PH2\SWS\BMP_1

JSNG: DEP OPER: DEP SCALE: 1=1.00
X:\LIBRARY\CIVIL\EROSION\WICHITA\BMP\STORM\SEBMP_PFC_DTLS1-R14.DWG 04/02/03 09:08:33 AM CST

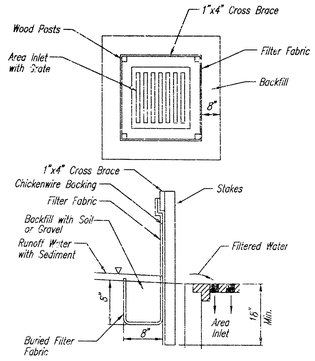

SILT FENCE BARRIERS FOR AREA INLETS
(INLET PROTECTION)

Material Specification:

Silt fence fabric should conform to the AASHTO M288 96 silt fence specification.
The wire or polymeric mesh backing used to help support the silt fence fabric should conform to the AASHTO M288 96 silt fence specification.
The posts used to support the silt fence fabric should be a hardwood material with the following minimum dimensions: 2" square (nominal) by 4' long.
The material used to frame the tops of the posts should be 1" by 4" boards.
Silt fence fabric and support backing should be attached to the wooden posts and frame with staples, wire, zip ties, or nails.

Placement:

Place a silt fence drop inlet barrier in a location where it is unlikely to be overtopped.
Water should flow through silt fence, not over it. Silt fence barriers for area inlets often fail when repeatedly overtopped.
When used as a barrierfor area inlets, silt fence fabric and posts must be supported at the top by a wooden frame.
When a silt fence barrier for area inlets is located near an inlet that has steep approach slopes, the storage capacity behind the barrier is drastically reduced. Timely removal of sediment must occur for a barrier to operate properly in this location.

Proper installation method:

Excavate a trench around the perimeter of the area inlet that is at least 8" deep by 8" wide.
Drive posts to a depth of at least 18" around the perimeter of the area inlet.
The distance between posts should be 4' or less. If the distance between two adjacent corner posts is more than 4', add another post(s) between them.
Connect the tops of all the posts with a wooden frame made of 1" by 4" boards. Use nails or screws for fastening.
Attach the wire or polymeric-mesh backing to the outside of the post/frame structure with staples, wire, zip ties, or nails.
Roll out a continuous length of silt fence fabric long enough to wrap around the perimeter of the area inlet. Add more length for overlapping the fabric joint. Place the edge of the fabric in the trench, starting at the outside edge of the trench. Line all three sides of the trench with the fabric. Backfill over the fabric in the trench with the excavated soil and compact. After filling the trench, approximately 24" to 36" of silt fence fabric should remain exposed.
Attach the silt fence to the outside of the post/frame structure with staples, wire, zip ties, or nails. The joint should be overlapped to the next post.

Note: When a silt fence barrier for area inlet is placed in a shallow median ditch, make sure that the top of the barrier is not higher than the paved road. In this configuration, water may spread onto the roadway causing a hazardous condition.

List of common placement/installation mistakes to avoid:

Water should flow through a silt fence barrier for area inlet-not over it. Place a silt fence barrier for area inlet in a location where it is unlikely to be overtopped. Silt fence barrier for area inlets often fail when repeatedly overtopped.
Do not place posts on the outside of the silt fence barrier for area inlet. In this configuration, the force of the water is not resisted by the posts, but only by the staples (wire, zip-ties, nails, etc.). The silt fence will rip and fail.
Do not install silt fence barrier for area inlets without framing the top of the posts.
The corner posts around area inlets are stressed in two directions whereas a normal silt fence is only stressed in one direction. This added stress requires more support.

Inspection and Maintenance:

Silt fence barrier for area inlets should be inspected every 7 days and within 24 hours of a rainfall of 1/2" or more. The following is a list of questions that should be addressed during each inspection:

Does water flow under the silt fence?
Does the silt fence sag excessively?
Has the silt fence torn or become detached from the posts?
Does sediment need to be removed from behind the area inlet barrier?

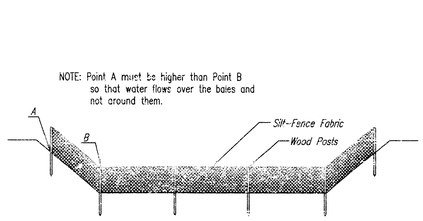

ELEVATION

SILT FENCE DITCH CHECKS
(STREAM PROTECTION)

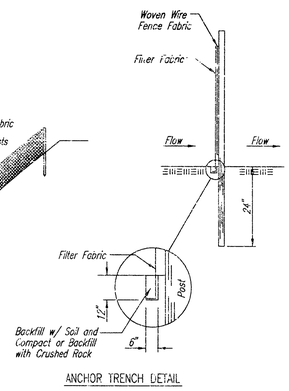

ANCHOR TRENCH DETAIL

Material Specification:

Silt fence fabric should conform to the AASHTO M288 96 silt fence specification.
The posts used to support the silt fence fabric should be a hardwood material with the following minimum dimensions: 2" square (nominal) by 4' long.
Silt fence fabric should be attached to the wooden posts with staples, wire, zip ties, or nails.

Placement:

Place silt fence in ditches where it is unlikely that it will be overtopped.
Water should flow through a silt fence ditch check, not over it. Silt fence ditch checks often fail when overtopped.
Silt fence ditch checks should be placed perpendicular to the flowline of the ditch.
The silt fence should extend far enough so that the ground level at the ends of the fence is higher than the top of the low point of the fence. This prevents water from flowing around the check.
Checks should not be placed in ditches where high flows are expected. Rock checks should be used instead.
Silt fence should be placed in ditches with slopes of 6% or less. For slopes steeper than 6%, rock checks should be used.

The following table provides check spacing for a given ditch grade:

Ditch Check Ditch grade (%)	Spacing Check Spacing (feet)
0.5	200
1.0	200
2.0	100
3.0	65
4.0	50
5.0	40
6.0	30

Proper installation method:

Excavate a trench perpendicular to the ditch flowline that is at least 12" deep by 6" wide.
Extend the trench in a straight line along the entire length of the proposed ditch check.
Place the soil on the upstream side of the trench for later use.
Roll out a continuous length of silt fence fabric on the downstream side of the trench.
Place the edge of the fabric in the trench starting at the top upstream edge of the trench.
Line two sides of the trench with the fabric as shown on detail. Backfill over the fabric in the trench with the excavated soil and compact. After filling the trench, approximately 24" to 36" of silt fence fabric should remain exposed.
Lay the exposed silt fence on the upstream side of the trench to clear an area for driving in the posts. Just downstream of the trench, drive posts into the ground to a depth of at least 24". Place posts no more than 4' apart.
Attach the silt fence to the anchored post with staples, wire, zip ties, or nails.

List of common placement/installation mistakes to avoid:

Water should flow through a silt fence ditch check-not over it. Place silt fence in ditches where it is unlikely that it will be overtopped. Silt fence installations quickly deteriorate when water overtops them.
Do not place silt fence posts on the upstream side of the silt fence fabric. In this configuration, the force of the water is not restricted by the posts, but only by the staples (wire, zip ties, nails, etc.). The silt fence will rip and fail.
Do not place a silt fence ditch check directly in front of a culvert outlet. It will not stand up to the concentrated flow.
Do not place silt fence ditch checks in ditches that will likely experience high flows. They will not stand up to concentrated flow.
Follow prescribed ditch check spacing guidelines. If spacing guidelines are exceeded, erosion will occur between the ditch checks.
Do not allow water to flow around the ditch check. Make sure that the ditch check is long enough so that the ground level at the ends of the fence is higher than the low point on the top of the fence.
Do not place silt fence ditch checks in channels with shallow soils underlain by rock. If the check is not anchored sufficiently, it will wash out.

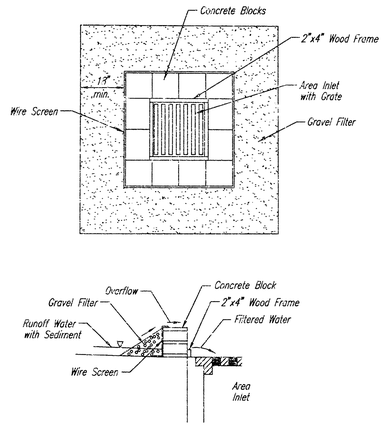

CONCRETE BLOCK FILTER FOR AREA DRAIN
(INLET PROTECTION)

Gravel barriers provide little filtering of large inflow waters. However, when installed correctly and maintained, they can effectively treat low runoff flows.

Placement of gravel filters around area drains must be completed in a manner that will not cause local flooding.

Gravel filters can be used if the immediate and adjacent area to the area drain consists of soil or pavement.

Only gravel filters are to be installed on top of the pavement.

Instructions for Installing:

STEP 1: Place concrete blocks around the grate. The blocks can be stacked one or two high and should be supported by a 2"x4" board.
STEP 2: Wrap 1/2" mesh wire screen around the concrete blocks.
STEP 3: Place 1" to 1-1/2" diameter rock around the blocks and wire screen. Be sure the rock extends down from the top of the concrete block.
STEP 4: To prevent damage to vehicles, signs warning drivers about the structures may be necessary.

An alternative method is use of gravel bags that are supported to prevent collapsing.

Use of rock having diameters smaller than 1" may result in clogging of pores and reduce the amount of water flowing into an inlet.

Maintenance:

All gravel filters installed around area drains should be inspected and repaired after each runoff event. Sediment should be removed when material is within 3" of the top of any block. Periodically, the gravel should be raked to increase infiltration and filtering of runoff waters. Accumulated sediment is to be removed immediately from roads and streets after every runoff event.

Inspection and Maintenance:

Silt fence ditch checks should be inspected every 7 days and within 24 hours of a rainfall of 1/2" or more. The following is a list of questions that should be addressed during each inspection:

Does water flow around the ditch check?
Does water flow under the ditch check?
Does the silt fence sag excessively?
Has the silt fence torn or become detached from the posts?
Does sediment need to be removed from behind the ditch check?

CITY OF WICHITA

SOIL EROSION
BMP DETAILS

CHRISTOPHER M. CARRIER, P.E.
STORM WATER ENGINEER

PROJECT NUMBER	OCA NO.
1339PPS	607861
DATE: MAY 2001	SHEET 7 OF 10

USNR: DEP OPER: DEP SCALE: 1=1.00
I:\STANDARD\Standards Wichita\SERMP_PEC_DTL.S2 06-05-2001 01:59:26 pm

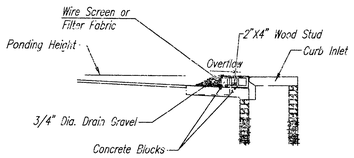

SECTION A-A

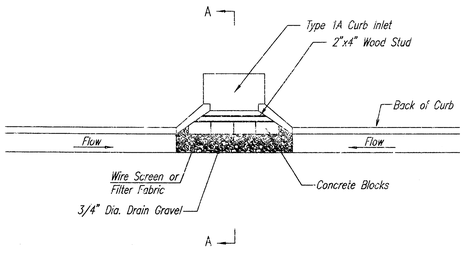

CURB INLET GRAVEL FILTERS
(INLET PROTECTION-RESIDENTIAL STREETS ONLY)

NOTE: Other types of curb inlet protection may be approved by the city so long as equal protection is provided.

A gravel inlet filter shall be installed at sump locations on residential streets. This type of protection is not to be used on arterial or collector streets at any time that it would pose an undue traffic hazard.

Instructions for Installing:

STEP 1: Place concrete blocks around the inlet as shown on drawing. Insert 2x4 board as shown.
STEP 2: Wrap 1/2" mesh wire screen around the concrete blocks.
STEP 3: Place 1" to 1-1/2" diameter rock around the blocks and wire screen. Be sure the rock extends down from the top of the concrete block.
STEP 4: To prevent damage to vehicles, signs warning drivers about the structures may be necessary. An alternative installation is the use of gravel bags supported by a 2"x4" board to prevent collapsing.

Use of rock with diameters smaller than 1" in the bag may result in clogging of pores and reduce the amount of water flowing into an inlet.

Maintenance:

All curb inlet gravel filters shall be inspected and repaired after each runoff event. Sediment deposits are to be removed once material is within 8 cm (3 inches) of the top of any block. Periodically, the gravel shall be raked to increase infiltration and filtering of runoff waters. Accumulated sediment is to be removed immediately from roads and streets.

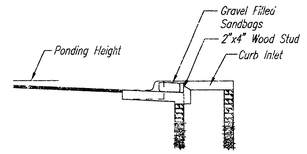

SECTION B-B

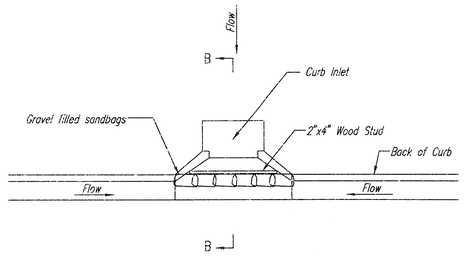

CURB INLET SANDBAG FILTERS
(INLET PROTECTION)

NOTE: Other types of curb inlet protection may be approved by the City so long as equal protection is provided.

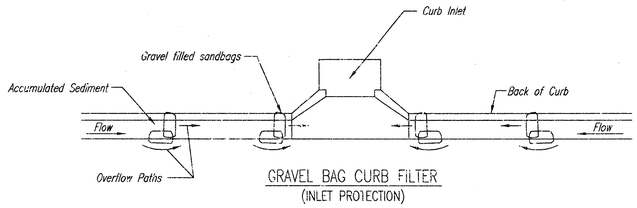

GRAVEL BAG CURB FILTER
(INLET PROTECTION)

NOTE: Place two or more sets of bags in a manner that results in maximum support. The flow line bag must be lower than top of curb.

CURB SEDIMENT TRAPS

When inlets are located on streets having a grade (i.e., sump conditions do not exist), installing gravel (or sand) bags in the gutter flow line to create small sediment traps can be considered. Gravel bags are recommended over sand bags to allow for drainage.

If the spacing between bags becomes too large, little sediment may be trapped. Spacing of bags should be completed using the table or graph that illustrates placement distances based upon street slope. When installed in the gutter, bag tops must be lower than the sidewalk.

Spacing:

Gravel bags are to be placed according to street grades using the following table or graph that appears below.

GRADE (%)	SPACING (FEET)
0.5	75
1.0	45
2.0	18
3.0	12
4.0	9
5.0	6

Maintenance:

Collected sediment shall be removed after every runoff event. Bags that are destroyed by vehicular traffic or through natural deterioration are to be immediately replaced.

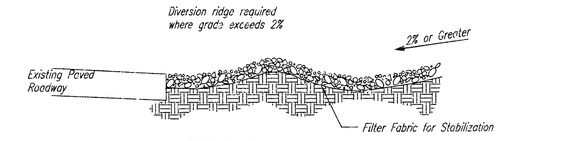

SECTION C-C

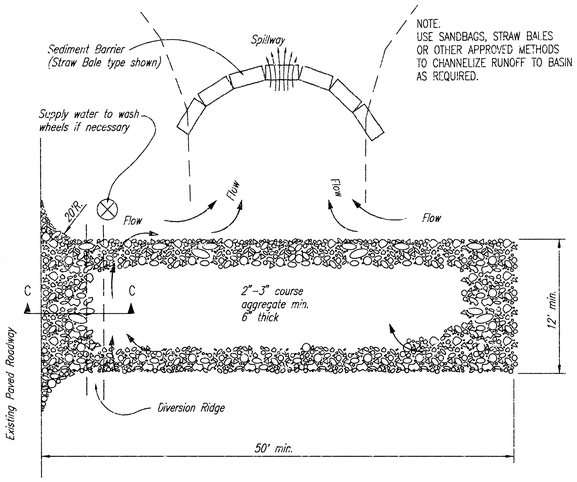

STABILIZED CONSTRUCTION ENTRANCE

NOTES:

1. THE ENTRANCE SHALL BE MAINTAINED IN A CONDITION THAT WILL PREVENT TRACKING OR FLOWING OF SEDIMENT ONTO PUBLIC RIGHTS-OF-WAY. THIS MAY REQUIRE TOP DRESSING, REPAIR AND/OR CLEANOUT OF ANY MEASURES USED TO TRAP SEDIMENT.
2. WHEN NECESSARY, WHEELS SHALL BE CLEANED PRIOR TO ENTRANCE ONTO PUBLIC RIGHT-OF-WAY.
3. WHEN WASHING IS REQUIRED, IT SHALL BE DONE ON AN AREA STABILIZED WITH CRUSHED STONE THAT DRAINS INTO AN APPROVED SEDIMENT TRAP OR SEDIMENT BASIN, AS SHOWN ABOVE.
4. DRIVE ENTRANCES ONTO RESIDENTIAL LOTS WILL NOT BE REQUIRED TO HAVE THE SEDIMENT BARRIER SHOWN, BUT WHEEL WASHING MAY BE REQUIRED IF STABILIZED ENTRANCE IS NOT SUFFICIENT TO KEEP MUD FROM BEING TRACKED ONTO ADJACENT STREET. ENTRANCE SHALL EXTEND FROM BACK OF CURB TO DWELLING.

CITY OF WICHITA

SOIL EROSION BMP DETAILS

CHRISTOPHER M. CARRIER, P.E.
STORM WATER ENGINEER

PROJECT NUMBER	OCA NO.
133gPPS	607861
DATE: MAR 2003	SHEET 8 OF 10

H:\CIVIL\01168\DWG\PH2\SWS\BMP3

DSNR: DEP OPER: DEP SCALE: 1=1.0C
Z:\STANDARD\Standards Wichita\SEBMP_PEC_DTLS3 06-05-2001 02:03:06 pm

PHASE 1 – INITIAL EARTHWORK AND UTILITIES (EXCEPT STORM SEWER)

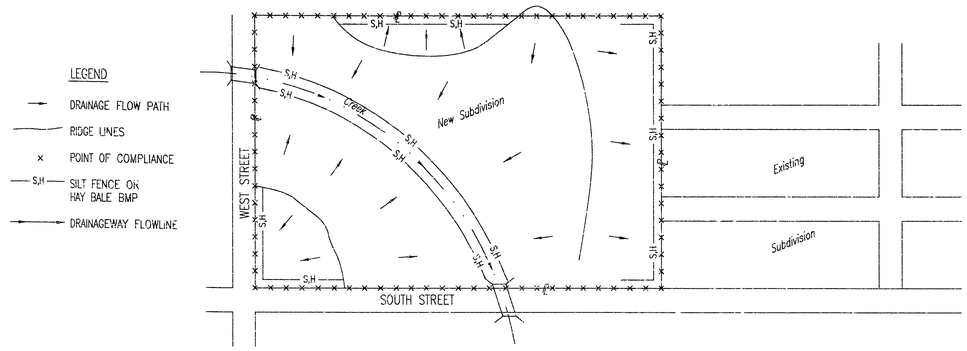

1. DURING THIS PHASE OF SUBDIVISION CONSTRUCTION, THE POINTS OF COMPLIANCE ARE THE PERIMETER BOUNDARIES AND ANY DRAINAGE WAYS OR STORM SEWERS DRAINING THROUGH OR FROM THE SITE. SHOULD LAKES BE CONSTRUCTED WITHIN THE SUBDIVISION THAT WILL DISCHARGE DURING STORMS, THEY ARE ALSO A POINT OF COMPLIANCE.
2. HAYBALES OR SILT FENCE MUST BE CONSTRUCTED ALONG THE PROPERTY LINE WHERE ON SITE WATER CAN DRAIN OFF THE PROPERTY. THESE BMP'S WILL ALSO BE INSTALLED ALONG ANY DRAINAGE DITCH OR LAKE THAT CAN DISCHARGE.
3. SHOULD SILT OR SEDIMENT ENTER THE DITCHES OR GUTTERLINES ON THE ADJACENT BOUNDRY STREETS, APPROPRIATE BMP'S WILL BE PLACED WITHIN THE SUBDIVISION TO PREVENT THIS.
4. ANY MUD TRACKED ONTO ADJACENT STREETS WILL BE REMOVED AT THE END OF EACH WORK DAY.
5. CONTRACTORS WORKING WITHIN THE SITE WILL NOT BE REQUIRED TO USE INDIVIDUAL BMP'S AS LONG AS THOSE SPECIFIED ABOVE ARE IN PLACE AND EFFECTIVE. CONTRACTORS WORKING ON THE BOUNDRY LINE STREETS OR ON ADJACENT PROPERTIES TO EXTEND UTILITIES ARE EXPECTED TO USE BMP'S AT THEIR WORK LOCATIONS, AS NEEDED.
6. UTILIZE STABILIZED CONSTRUCTION ENTRANCE AT ENTRANCE AND EXIT ONTO ANY EXISTING PUBLIC STREETS.
7. THE SUBDIVISION DEVELOPER (OWNER) SHALL INSTALL AND MAINTAIN THE ON-SITE BMP'S.

PHASE 2 – INSTALLATION OF STORM SEWER

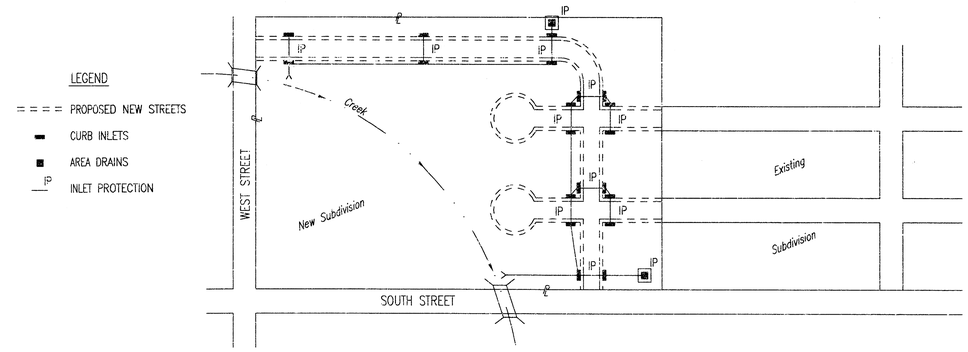

1. DURING THIS PHASE OF SUBDIVISION DEVELOPMENT, ALL BMP'S REQUIRED IN PHASE 1 SHALL REMAIN IN PLACE AND BE MAINTAINED.
2. AS NEW STORM SEWERS, WITH INLETS, ARE INSTALLED, THE STORM SEWERS MUST NOW BE PROTECTED SO ALL NEW INLETS BECOME POINTS OF COMPLIANCE.
3. AREA DRAINS – AS SOON AS WATER CAN FLOW INTO THESE DRAINS, HAYBALE OR SILT FENCE PROTECTION WILL BE INSTALLED AROUND THEM.
4. CURB OPENING INLETS – AS SOON AS WATER CAN FLOW INTO THESE DRAINS, INLET PROTECTION BMP'S MUST BE INSTALLED. SEE PHASE 3 – STREET CONSTRUCTION.
5. THE STORM SEWER CONTRACTOR WILL BE RESPONSIBLE FOR INSTALLING THESE BMP'S. IF WATER CANNOT FLOW INTO CURB INLETS UNTIL STREET CONSTRUCTION IS COMPLETE, THEN STREET CONTRACTOR WILL INSTALL INLET PROTECTION.
6. THE SUBDIVISION DEVELOPER WILL MAINTAIN THESE BMP'S ONCE INSTALLED.
7. ONCE ALL DISTURBED GROUND DRAINING TO AN INLET HAS BEEN RESTABILIZED WITH GRASS OR SOD, THE SUBDIVISION DEVELOPER WILL BE RESPONSIBLE FOR PERMANENTLY REMOVING THE INLET PROTECTION.

PHASE 3 – STREET CONSTRUCTION

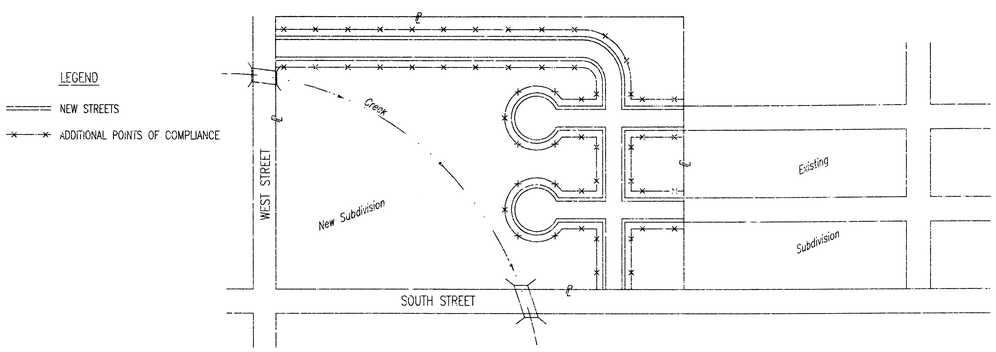

1. DURING THIS PHASE OF SUBDIVISION CONSTRUCTION, NEW STREETS ARE INSTALLED. ALL BMP'S INSTALLED DURING PHASE 1 AND 2 MUST STILL BE MAINTAINED. THE POINT OF COMPLIANCE NOW SHIFTS TO THE BACK OF CURB ALONG EACH STREET.
2. CURB OPENING INLET PROTECTION:
   A. SUMP AREAS – INLET PROTECTION SHALL BE PROVIDED WHEN STREET SUBGRADE WORK IS COMPLETED.
   B. NON-SUMP LOCATIONS – PROVIDE INLET PROTECTION AS SOON AS BASE COURSE ASPHALT IS INSTALLED, BEFORE THE SURFACE COURSE LIFT.
3. BMP'S WILL BE REQUIRED BACK OF CURB WHEREVER WATER CAN FLOW OVER THE CURB AND THE CURB HAS BEEN BACKFILLED TO WITHIN 3" OR LESS OF THE TOP OF CURB (SEE CURB BACKFILL DETAIL). FOR CURBS NOT YET ENTIRELY BACKFILLED (3" OR MORE BELOW TOP OF CURB), BMP'S WILL BE REQUIRED AT POINTS WHERE WATER BREAKS OVER CURB WHICH COULD RESULT IN THE PLACEMENT OF SEDIMENT IN THE CUTTER.
4. SEE DETAIL THIS SHEET ON BACK OF CURB PROTECTION.
5. THE BACK OF CURB PROTECTION SPECIFIED ON THIS PLAN MAY HAVE TO BE SUPPLIMENTED WITH HAYBALE OR SILT FENCE BMP'S AT LOCATIONS WHERE CONCENTRATED FLOW RESULTS IN SEDIMENT BEING CARRIED OVER THE EXCELSIOR MATS.
6. THE STREET CONTRACTOR WILL BE RESPONSIBLE FOR INSTALLING BACK OF CURB BMP'S.
7. THE INDIVIDUAL LOT OWNERS WILL BE RESPONSIBLE FOR MAINTAINING THE BACK OF CURB BMP'S IN FRONT OF THEIR LOTS UNTIL SUCH TIME AS ADJACENT DISTURBED EARTH IS STABILIZED WITH GRASS OR SOD.

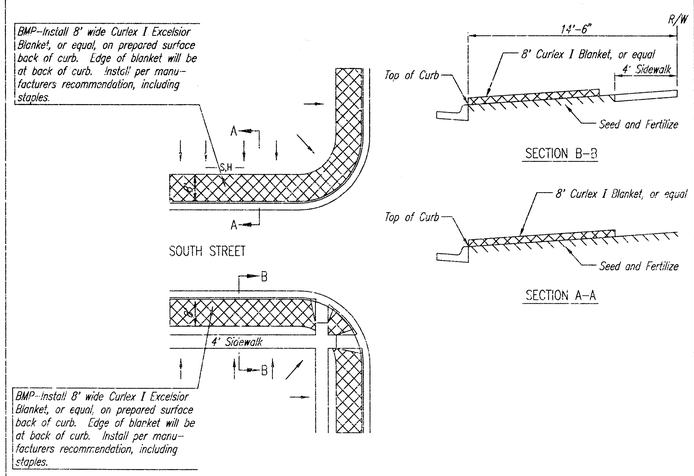

BACK OF CURB PROTECTION DETAIL

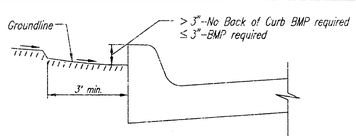

CURB BACKFILL DETAIL

GENERAL NOTES:

1. THE INTENT OF ALL BEST MANAGEMENT PRACTICES (B.M.P.'S) IS TO PREVENT ERODED SOIL FROM ENTERING DITCHES, STORM SEWERS, OR ANY OTHER DRAINAGE FEATURE.
2. THIS SHEET IS INTENDED TO PROVIDE GUIDELINES AS TO WHAT TYPE OF BMP'S WILL BE INSTALLED DURING THE CONSTRUCTION PROCESS. CONTRACTORS ARE EXPECTED TO BID PROJECTS ACCORDINGLY.
3. BMP'S SHALL BE MAINTAINED DURING THE CONSTRUCTION PROCESS TO REMAIN EFFECTIVE. MAINTENANCE SHALL BE AS INDICATED ON THE BMP DETAIL SHEETS.
4. PERSONS DESTROYING BMP'S SHALL BE RESPONSIBLE FOR IMMEDIATELY REPAIRING THEM OR INSTALLING SUITABLE REPLACEMENT BMP'S.
5. THE DEVELOPMENT OF ANY SUBDIVISION THAT DISTURBS 5 ACRES OR MORE WILL REQUIRE A FEDERAL/STATE NPDES STORMWATER PERMIT. THE PREPARATION OF A STORMWATER POLLUTION PREVENTION PLAN IS REQUIRED. EROSION CONTROL BMP'S ARE REQUIRED. THE DETAILS SHOWN ON THIS SHEET ARE THE MINIMUM STANDARDS TO BE SHOWN ON POLLUTION PREVENTION PLAN.
6. FOR SUBDIVISIONS SMALLER THAN 5 ACRES, SOIL EROSION BMP'S ARE REQUIRED. ALSO, DEVELOPERS AND CONTRACTORS ARE ENCOURAGED TO DEVELOP POLLUTION PREVENTION PLANS FOR EACH PROJECT PRIOR TO CONSTRUCTION.
7. FAILURE TO USE AND MAINTAIN BMP'S IS A VIOLATION OF SECTION 16.32 OF THE CITY CODE AND WILL SUBJECT THE SUBDIVISION DEVELOPER AND CONTRACTORS TO THE PENALTIES PROVIDED THEREIN.
8. THE APPLICATION OF BMP'S SHOWN ON THIS SHEET IS FOR SITUATIONS NORMALLY ENCOUNTERED. FROM TIME TO TIME, SITUATIONS WILL ARISE THAT MAY REQUIRE A DIFFERENT BMP OTHER THAN THAT SHOWN. BMP'S, OTHER THAN THOSE SHOWN, MAY BE UTILIZED SO LONG AS THEY ARE EFFECTIVE AND MAINTAINED.
9. A STABILIZED EARTH SURFACE IS DEFINED AS ONE THAT IS HARD SURFACED WITH CONCRETE, ASPHALT, OR THE LIKE, OR ONE ON WHICH 70% OF THE GRASS HAS GERMINATED ON THE ENTIRE SURFACE.

CITY OF WICHITA

SOIL EROSION BMPS SUBDIVISION DEVELOPMENT PROCESS

CHRISTOPHER M. CARRIER, P.E.
STORM WATER ENGINEER

PROJECT NUMBER	OCA NO.
1339PPS	607861
DATE: MAY 2001	SHEET 9 OF 10

H:\CIVIL\GT168\DWG\PH2\SWS\BMP4

DSNR: DEP OPER: DEP SCALE: 1=1.00
K:\STANDARD\Standards Wichita\SEBMP_SUBDIVISION 06-05-2001 01:57:53 pm

FINAL PLAT OF

HANLEY SECOND ADDITION

AN ADDITION TO WICHITA, SEDGWICK COUNTY, KANSAS

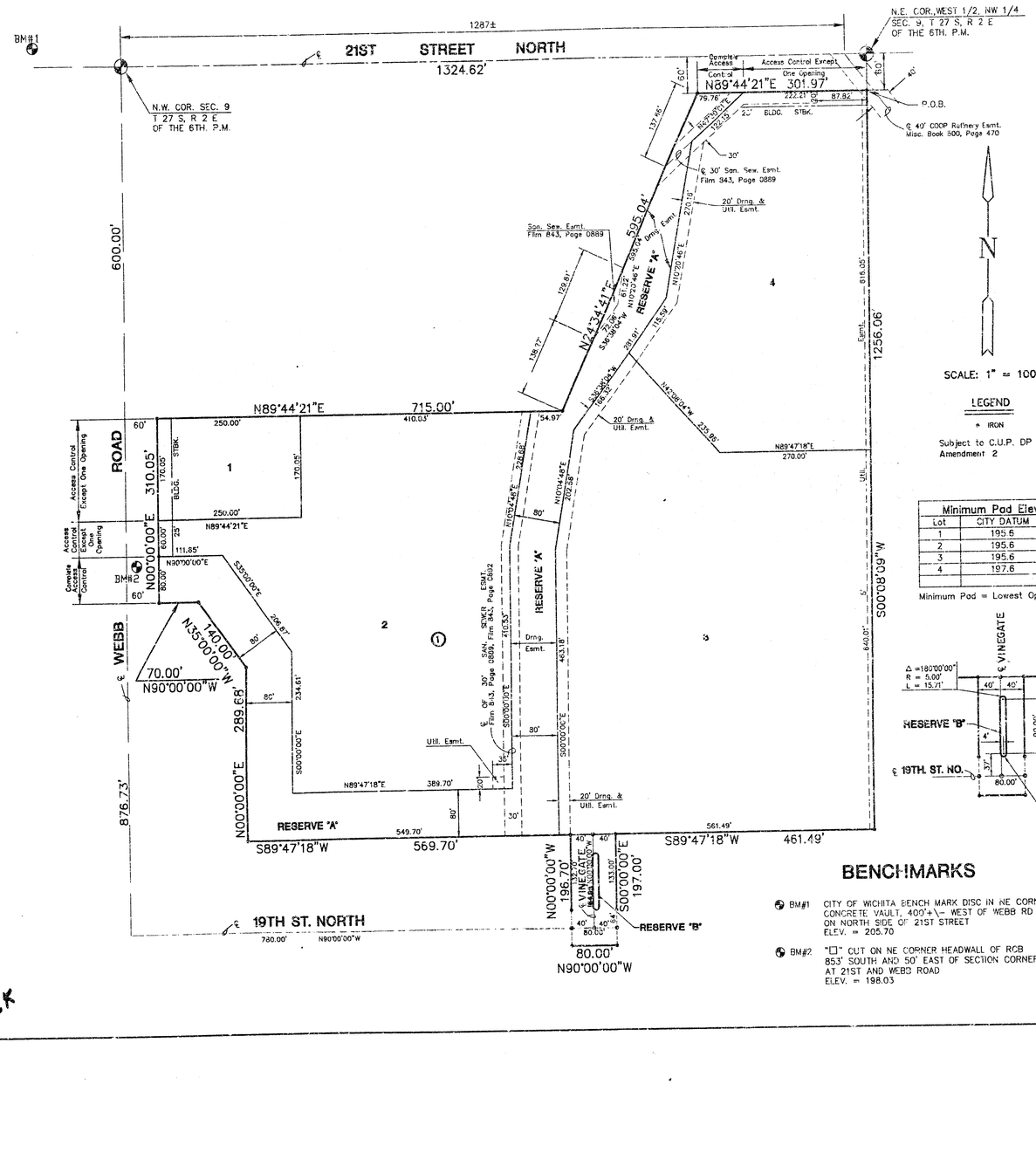

Minimum Pad Elevation		
Lot	CITY DATUM	USGS
1	195.6	1383.0
2	195.6	1383.0
3	195.6	1383.0
4	197.6	1385.0

Minimum Pad = Lowest Opening

BENCHMARKS

BM#1 CITY OF WICHITA BENCH MARK DISC IN NE CORNER CONCRETE VAULT, 400'+\- WEST OF WEBB RD ON NORTH SIDE OF 21ST STREET
ELEV. = 205.70

BM#2 "□" CUT ON NE CORNER HEADWALL OF RCB 853' SOUTH AND 50' EAST OF SECTION CORNER AT 21ST AND WEBB ROAD
ELEV. = 198.03

I, Kenneth H. Bengtson, a Registered Land Surveyor in Kansas, do hereby certify that I have been in responsible charge of surveying and plotting of "HANLEY SECOND ADDITION", an addition to Wichita, Sedgwick County, Kansas, into lots, a block, reserves and streets the same being accurately set forth in the accompanying plat and described herein:

A replat of Lots 2, 3, 4, 5, Reserve A, and Reserve B of Hanley Addition, an addition to Wichita, Sedgwick County, Kansas, and a portion of the West 1/2 of the NW 1/4, Sec. 9, T27S, R2E of the 6th. P.M., more particularly described as follows:

Beginning at a point on the East line and 60.00 feet South of the Northeast corner of said West Half; thence S 00° 08' 09" W, 1256.08 feet to a point lying 14 feet North of the South line of the North Half of said West Half; thence S 89° 47' 18" W, 461.49 feet; thence S 00° 00' 00"E, 197.00 feet; thence N 90° 00' 00" W, 80.00 feet; thence N 00° 00' 00" W, 196.70 feet to a point lying 14 feet North of said South line; thence S 89° 47' 18" W, 569.70 feet parallel with said South line; thence N 00° 00' 00" E, 289.68 feet; thence N 35° 00' 00" W, 140.00 feet; thence N 90° 00' 00" W, 70.00 feet to a point lying 60.00 feet East of the West line of said West Half; thence N 00° 00' 00" E, 310.05 feet parallel with said West line to a point lying 600 feet South of the North line of said West Half; thence N 89° 44' 21' E, 715.00 feet parallel with said North line; thence N 24° 34' 41" E, 595.04 feet to a point lying 60.00 feet South of said North line; thence N 89° 44' 21" E, 301.97 feet to the point of beginning.
All lots, blocks, streets, setbacks, reserves, and access control within the above described property are hereby vacated and replatted by virtue of K.S.A. 12-512 (b).

I hereby certify that the details of this plat are correct to the best of my knowledge and belief this 30 day of March 1998.

Kenneth H. Bengtson, P.E., R.L.S. #922
Mid-Kansas Engineering Consultants, Inc.
411 N. Webb Road
Wichita, KS 67206

KENNETH H. BENGTSON REGISTERED L.S. 922 KANSAS LAND SURVEYOR

KENNETH H. BENGTSON LICENSED 7239 KANSAS ENGINEER

Know all men by these presents that we the undersigned property owners of the land as described set forth in the Registered Land Surveyor's Certificate, have caused the same to be surveyed and platted into lots, a block, reserves and streets the same to be known as "HANLEY SECOND ADDITION", an addition to Wichita, Sedgwick County, Kansas. The street is dedicated to and for the use of the public. Easements for the construction and maintenance of public utilities and drainage, are hereby granted to the City of Wichita. All abutters right of access to or from Webb Road over and across the West line of HANLEY SECOND ADDITION, are hereby granted to the City of Wichita, provided however that Lot 1 and 2 shall have 1 opening each, as indicated on the face of the plat. All abutters right of access to or from 21st. Street over and across the North line of HANLEY SECOND ADDITION, are hereby granted to the City of Wichita, provided however that Lot 4 shall have 1 opening, as indicated on the face of the plat. Reserve A is platted for public utilities, drainage, open space, and landscaping. The reserves shall be owned and maintained by the homeowners association. Minimum Pads shall be as indicated on the face of the plat. Reserve B is platted for open space, landscaping, entry monuments, and irrigation.

Fred L. Hanley

Sandra June Hanley

STATE OF KANSAS) ss.
SEDGWICK COUNTY)

BE IT REMEMBERED, that on this 1st day of April 1998, before me the undersigned, a Notary Public in and for the County and State aforesaid, came Fred L. Hanley and Sandra June Hanley, to me personally known to be the same person who executed the foregoing instrument of writing and duly acknowledged the execution of the same.

IN WITNESS WHEREOF, I have hereunto set my hand and affixed my official seal, the day and year last above written.

Nancy Siebert
Notary Public:
Nancy Siebert
My appointment expires: 4/4/99

NANCY SIEBERT Notary Public - State of Kansas My Appt. Expires 4/4/99

We, American National Bank mortgagees on the above described property, do hereby consent to the plat of "HANLEY SECOND ADDITION".

American National Bank

Patrick Regan Jr., President

STATE OF KANSAS)
) ss.
SEDGWICK COUNTY)

BE IT REMEMBERED, that on this 30th day of March 1998, before me the undersigned, a Notary Public in and for the County and State aforesaid, came Patrick Regan Jr., President, to me personally known to be the same person who executed the foregoing instrument of writing and duly acknowledged the execution of the same.

IN WITNESS WHEREOF, I have hereunto set my hand and affixed my official seal, the day and year last above written.

Angela P. Dunlap
Notary Public: Angela P. Dunlap

ANGELA P. DUNLAP NOTARY PUBLIC STATE OF KANSAS My Appt. Exp.

My appointment expires: 3-24-2001

This plat of "HANLEY SECOND ADDITION", has been submitted to and approved by the Wichita-Sedgwick County Metropolitan Area Planning Commission of Wichita, Kansas.

Dated this 25th day of February, 1998.

WICHITA-SEDGWICK COUNTY METROPOLITAN AREA PLANNING COMMISSION

Richard E. Lopez, Chairman

Marvin S. Krout, Secretary

SEAL

This plat approved and all dedications shown thereon, if any, accepted by the City Council of the City of Wichita, Kansas, this 5TH day of May, 1998.

Bob Knight, Mayor

Pat Burnett, City Clerk

Entered on transfer record this 20th day of May 1998.

James Alford, County Clerk

STATE OF KANSAS)
SEDGWICK COUNTY) ss:

This is to certify that this instrument was filed for record in the Register of Deeds office this 20th day of May, 1998.

BILL MEEK, Register of Deeds

Linda Kizzire, Deputy
LINDA KIZZIRE

REGISTER OF DEEDS SEDGWICK COUNTY KANSAS

HANLEY 2ND ADDITION

20.00 CK

ff to ao of