STORM SEWER TO SERVE
MEDITERRANEAN PLAZA
3213 TOBEN
1365 PPS (607861)
WICHITA, KANSAS
NEIL D. CABLE, P.E., CITY ENGINEER

GENERAL NOTES

1. Contractor will be required to provide notice to utility companies a minimum of twenty-four (24) hours prior to any excavation, as follows:

Southwestern Bell Telephone Co.
154 N. Broadway
Wichita, Kansas 67202
Bob Alley
316-268-2245

Kansas Gas & Electric Co.
1900 E. Central
Wichita, Kansas 67214
Randy Truitt
316-261-6251
(Electric)

Wichita Water & Sewer Dept.
8th Floor, City Hall
455 N. Main St.
Wichita, Kansas 67202
Bill Perkins
316-268-4555

Aquila Network (Gas)
1611 S Hoover
Wichita, Kansas 67209
Calvin Briggs
316-941-7233

Wichita Sewer Maintenance Div.
Water & Water Pollution Control Dept.
8th Floor, City Hall
455 N. Main St.
Wichita, Kansas 67202
Steve Lashley
316-268-4624

Cox Communications
701 E. Douglas
Wichita, Kansas 67202
Brian Ring
316-262-4270 x.169

Kansas Gas Service
1021 E. 26th. North
Wichita, Kansas 67219
Charlene Lawless
316-383-8600 or 316-832-3177

Kansas One Call
800-344-7233

Dig Safe
316-687-2470

Emergency 911

The Contractor must notify the following in case of an emergency.

2. All improvements shall be installed in accordance with City of Wichita, Kansas Standard Specifications for Storm Sewer Construction.

3. Contractor shall not start work on the project until the project inspector is assigned to the project and is present on the site. Any work done without inspection will be required to be uncovered for inspection.

4. Underground utility service lines and overhead utility pole lines are to be adjusted as necessary by others prior to construction, unless the plans specifically call for their locations, as shown on the plans, represent the best information obtainable for design. Location information has been obtained from the various utility companies and is either from company record drawings or company-provided field locations. The Contractor will be required to work around existing utilities within the right-of-way which do not conflict with proposed construction.

5. The contractor shall be responsible for preserving property irons. The Contractor will be required to reestablish any property irons which are damaged or destroyed by his construction operations. Such irons shall be reestablished by a licensed land surveyor in accordance with state law.

6. All areas disturbed by construction operations shall be seeded with rye grass at a rate of 300 lbs/acre immediately following construction in that area. Ground shall be prepared per City of Wichita specifications prior to seeding.

7. Contractor shall verify the location of all utilities prior to beginning construction.

8. Pipe shall be Contech Ultra-Flo or approved equal.

APPROVED AS NOTED
BY CITY ENGINEER OF WICHITA

STORM SEWER VRH 8/1/03

NOTE TO CONTRACTORS:

PUBLIC PROPERTY
Inspection and testing for the waterline is to be provided by a licensed consulting engineering firm under contract with the Owner/Developer. Said inspection to be in accordance with the City of Wichita standard construction engineering practices and certified by a Licensed Professional Engineer. No work shall be performed in dedicated easements or public right-of-way by the contractor without such inspection nor shall any work be commenced without written authorization by the City Engineer. All Construction and Materials shall comply with the City of Wichita Specifications and Standards (on file and available in the City Engineer's Office).

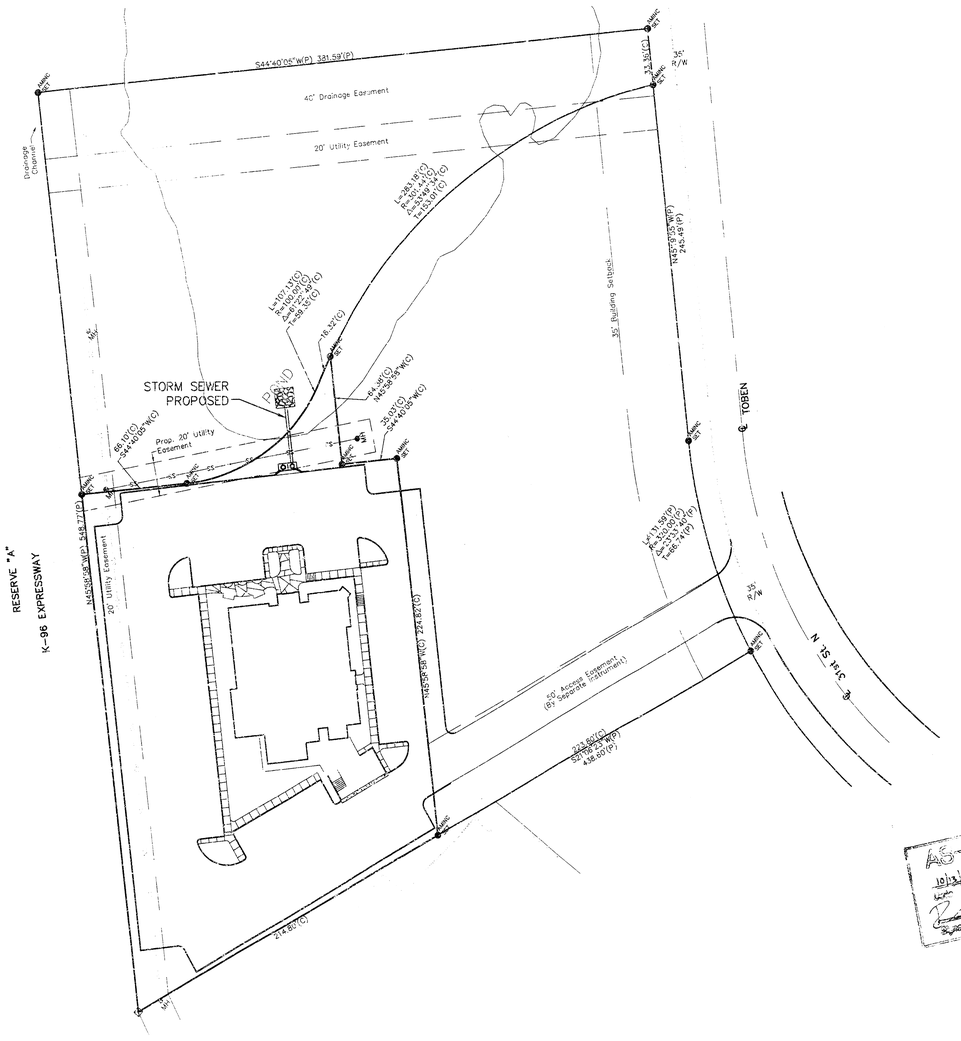

SCALE
40 0 40 80

SHEET INDEX

1. Title Sheet
2. Sta. Type 1-A Curb Inlet
3. Plan & Profile

BENCHMARK
City of Wichita disc
Webb Road and 34th St. North
Northwest corner of intersection
3 ft. North back of curb
3.6 ft. West signal arm pole
84 ft. West of centerline
40.2 ft. East/Northeast center of tree in median
Elev. 1431.58 msl 244.18 city datum

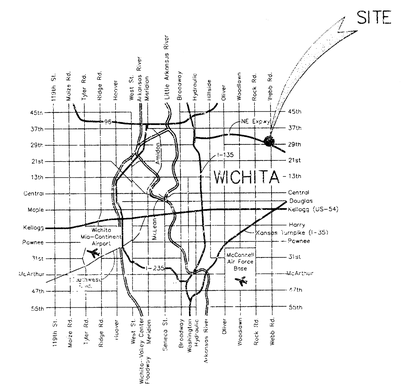

VICINITY MAP

AS-BUILT
10/13/04

TIMOTHY R. L.S. 1348 LICENSED KANSAS PROFESSIONAL ENGINEER 8/1/03

AG CONSULTING Inc.
ENGINEERING SERVICES
142 N. Emporia Wichita, KS 67202
316/265-2670 fax 316/265-2039

I:\PROJECTS\1365 PPS\Title.dwg Fri Aug 01 11:50:07 2003 Aug 05 15:41:47

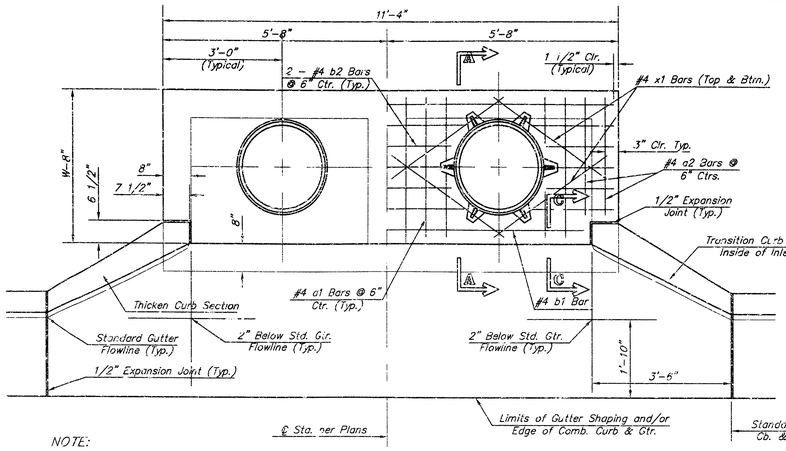

PLAN

NOTE:
Expansion Joint Only in Curb Area with Concrete Pavement.

*Left Side Shown Without Slab Reinforcing, Right Side Shown With Slab Reinforcing

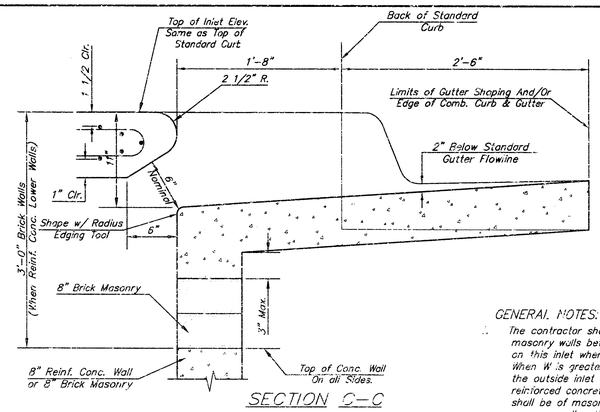

SECTION C-C

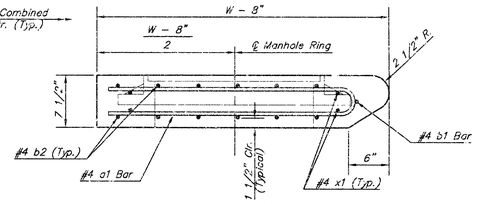

SECTION A-A

PRECAST SLAB AND FLOOR REINFORCING										
		W = 4'-4"		W = 5'-4"		W = 6'-4"		W = 7'-4"		W = 8'-4"
MARK	SIZE	NO.	LENGTH	NO.	LENGTH	NO.	LENGTH	NO.	LENGTH	NO.	LENGTH
* a1	#4	13	6'-7"	13	8'-7"	13	10'-7"	13	12'-7"	13	14'-7"
a2	#4	4	6'-0"	4	8'-0"	4	10'-0"	4	12'-0"	4	14'-0"
a3	#4	23	4'-1"	23	5'-1"	23	6'-1"	23	7'-1	23	8'-1"
b1	#4	1	9'-9"	1	9'-9"	1	9'-9"	1	9'-9"	1	9'-9"
* b2	#4	23	11'-1"	29	11'-1"	35	11'-1"	41	11'-1"	47	11'-1"
x1	#4	16	3'-10"	16	4'-2"	16	4'-6"	16	4'-10"	16	5'-2"
WALL REINFORCING											
		W = 4'-4"		W = 5'-4"		W = 6'-4"		W = 7'-4"		W = 8'-4"	
MARK	SIZE	NO.	LENGTH	NO.	LENGTH	NO.	LENGTH	NO.	LENGTH	NO.	LENGTH
w1	#4	①	11'-1"	①	11'-1"	①	11'-1"	①	11'-1"	①	11'-1"
w2	#4	①	4'-1"	①	5'-1"	①	6'-1"	①	7'-1"	①	8'-1"
w3	#4	52	②	56	②	60	②	64	②	68	②

* Field Bend or Cut Reinforcing as Required for Clearance.
① 4 (H1 - 12") (H1 - 21") Rounded down to nearest 0.5'
② H1 - 3"

GENERAL NOTES:

1. The contractor shall be required to construct 8" brick masonry walls between the concrete inlet base and top on this inlet when W=5'-4" or less and H=7'-0" or less. When W is greater than 5'-4" and H is less than 7'-0" the outside inlet walls below the brick stack shall be reinforced concrete construction and the center wall shall be of masonry construction as shown for the masonry wall option.
2. Inlet invert shall be shaped with 8 sack sand mix concrete to create flow channels and to increase hydraulic efficiency such that the inlet will be self cleaning beiween all inlet and/or outlet pipes.
3. Concrete tops to be installed on thin mortar cushion to insure full support along brick walls. Concrete tops may be cast in place or precast. Concrete used for inlet construction shall be concrete pavement mix.
4. Inlet top reinforcing shall be spaced on 6" max. centers. Inlet lids shall be notched out as indicated to facilitate construction of curb. Bars in inlet top to be field bent or cut to clear manhole ring.
5. The ends of all pipes installed in inlets shall be cut off flush with the inside face of the inlet wall.

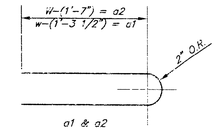

BENDING DIAGRAM

STANDARD CURB INLET PRECAST TOPS			
W	PRE-CAST TOP SIZE	PIPE SIZE	CU. YD. CONC.
4'-4"	3'-8" 11'-4" 7 1/2"	21" & SMALLER	0.83±
5'-4"	4'-8" 11'-4" 7 1/2"	24" & 30"	1.09±
6'-4"	5'-8" 11'-4" 7 1/2"	36" & 42"	1.35±
7'-4"	6'-8" 11'-4" 7 1/2"	48" & 54"	1.61±
8'-4"	7'-8" 11'-4" 7 1/2"	60" & 66"	1.87±

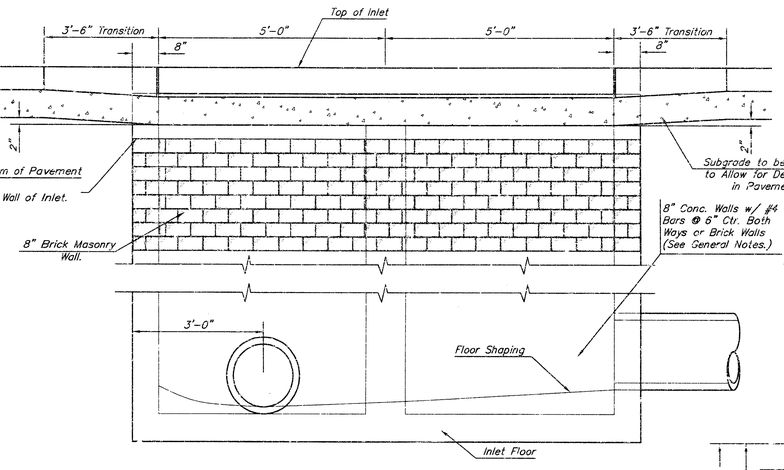

ELEVATION

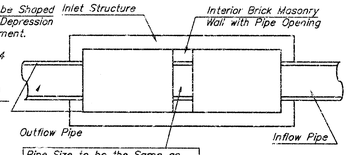

CASE I

NOTE:
Center Wall Pipe Size shall be as Specified in Inlet Construction Notes on the Plan/Profile Sheets for those Cases not Shown Here.

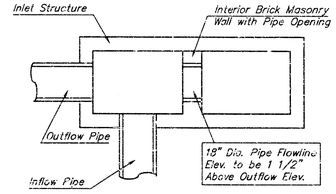

CASE II

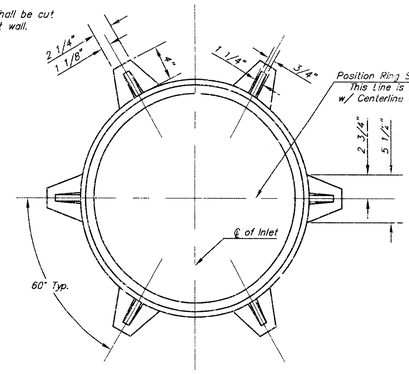

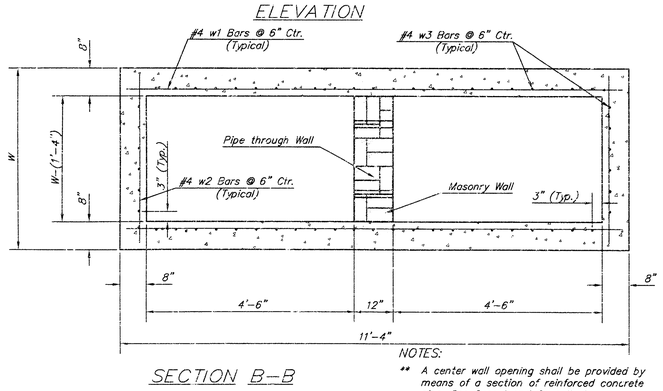

SECTION B-B

NOTES:
** A center wall opening shall be provided by means of a section of reinforced concrete pipe. See Case I and Case II above.
*** Slope of inlet tops to match sidewalk of parking slopes within limits indicated

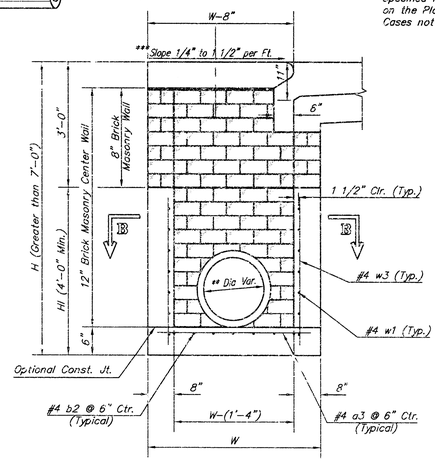

TYPICAL INLET SECTION AT CENTER WALL
(Reinforced Concrete Walls)

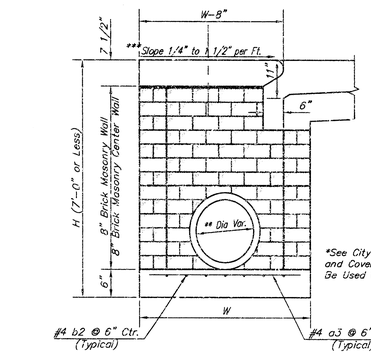

TYPICAL INLET SECTION AT CENTER WALL
(Masonry Walls)

*See City of Wichita Standard Manhole Ring and Cover Detail Sheet for Cover Details to Be Used With Inlet Frame.

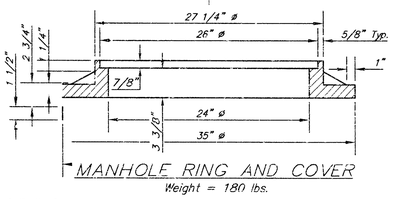

MANHOLE RING AND COVER
Weight = 180 lbs.

THE CITY OF WICHITA
CITY ENGINEER'S OFFICE
CITY HALL - SEVENTH FLOOR
455 NORTH MAIN STREET
WICHITA, KANSAS 67202
(316) 268-4600
(316) 268-4174 FAX

STANDARD TYPE 1-A CURB INLET
OPENING = 6" x 10'-0"

M. E. LINDEBAK P.E. - CITY ENGINEER

PROJECT NUMBER	INDEX CODE
797 PPS 607661	
DATE MAR 96	SHEET 9 OF 14

PROJECT NUMBER 1365 PPS (607861)				AM NO. 020723	JOHNNY CARINO'S COUNTRY ITALIAN	SHEET 2
DESIGN	DRAWN C.O.W.	FILE typ1a	DATE 07-15-03	SCALE N.T.S.	TYPE 1-A CURB INLET	OF 3
					3219 TOSEN, WICHITA, KANSAS	

PPS-typ1a.dwg Fri Aug 01 11:58:26 2003 Aaron Earlewine

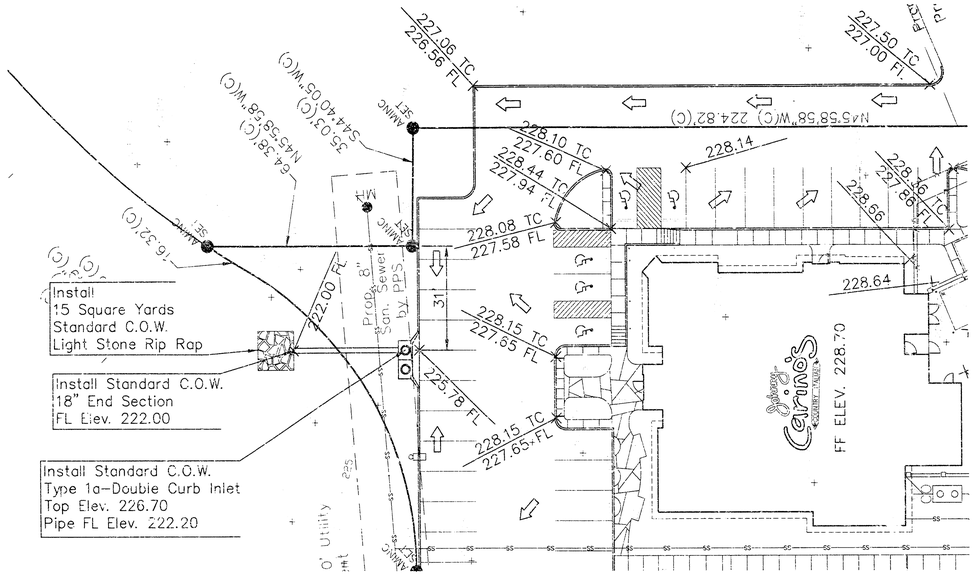

SCALE

20 0 20 40

LEGEND

225	= Exist. Contours
+	= Exist. Spot Elev.
⇦	= Drainage Arrow
227.50 TC / 227.00 FL ×	= Prop. Spot Elev.
⊠	= 3/4" Iron Pipe PEC cap (found)
AMINC SET	= 5/8" Rebar AMINC CLS #104 (set)
(C)	= Calculated
(P)	= Platted
R.O.W.	= Right-of-Way
	= Fire Hydrant
♿	= Handicap Parking
	= Light Pole
MH	= Manhole
32	= Parking Stall
	= Sanitary Sewer
	= Sign
	= Water
WM	= Water Meter
WV	= Water Valve
CO	= Cleanout

BENCHMARK
City of Wichita disc
Webb Road and 34th St. North
Northwest corner of intersection
3 ft. North back of curb
8.6 ft. West signal arm pole
84 ft. West of centerline
40.2 ft. East/Northeast center of tree in median
Elev. 1431.58 msl 244.18 city datum

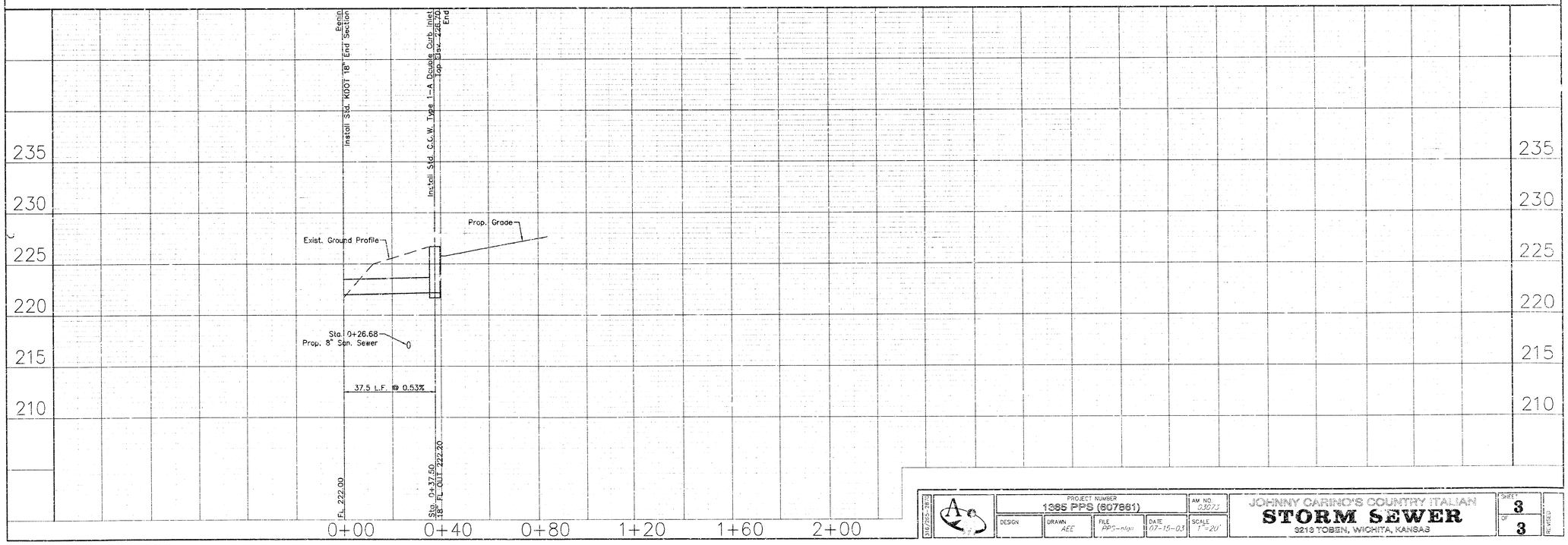

	PROJECT NUMBER 1365 PPS (607861)			AM. NO. 04022	JOHNNY CARINO'S COUNTRY ITALIAN STORM SEWER 3213 TOBEN, WICHITA, KANSAS	SHEET 3 OF 3	REVISED
DESIGN	DRAWN AEE	FILE PPS-nlgs	DATE 11-07-15-03	SCALE 1"=20'			

316/265-2815

S:\plan.dwg Fri Aug 01 11:58:31 2003 Aaron Earleywine

18 03 03 13