STORM WATER SEWER TO SERVE

Mediterranean Plaza Addition

Part of Lot 9, Block 2

Private Project Number: 1388 PPS (807661)

CITY OF WICHITA, KANSAS

Neil Cable, P.E. City Engineer

August 2003

Bench Marks:

B.M. #1- "□" Cut on Northeast Corner of RCBC
125'± Northwest of West Property Corner.
Elevation = 221.31 City Datum.

B.M. #2- 0.5 miles east of Rock Road on 29th Street North.
COW Bench Mark- Northwest corner of RCBC, on the south end of the wingwall.
100 ft. +/- east ¼ section corner.
300 ft. +/- west of Wilderness.
Elevation = 215.80 City Datum.

Index

Cover/Plan/Profile Sheet	1
Inlet & Sediment Barrier Detail	2
BMP Erosion Details	3
Copy Of Plat	4

Legal Description

Part of Lot 9, Block 2, Mediterranean Plaza Addition, Wichita, Sedgwick Co., KS.

APPROVED AS NOTED
BY CITY ENGINEER OF WICHITA
Storm Sewers VRH 9/2/03

NOTE TO CONTRACTORS

Installation, inspection and testing for this project is to be provided by a Licensed Consulting Engineering Firm under contract with the Owner/Developer. Said inspection to be in accordance with the City of Wichita standard construction engineering practices and certified by a Licensed Professional Engineer. No work shall be performed in dedicated easements or public right-of-way by the Contractor without such inspection nor shall any work be commenced without written authorization by the City Engineer. All Construction and Materials shall comply with the City of Wichita Specifications and Standards (on file and available in the City Engineer's Office).

General Notes

1. Contractor will be required to provide notice to utility companies a minimum of forty-eight (48) hours prior to any excavation, as follows:

   Kansas One-Call 587-2470

   The Contractor must notify the following in case of an emergency:

Cox Communications	262-4270
Kansas Gas Service Company	1-888-482-4950
Westar Energy (Electric)	383-8650
Aquila Energy (Gas)	1-800-303-0357
SBC	1-800-288-8313
City of Wichita Water Dept. (Water)	268-4908
City of Wichita Sewer Maint. (SS)	268-4024
City of Wichita Storm Sewer Maint.	268-4090
City of Wichita Traffic Maint.	268-4034

2. Utility service lines, poles, valve boxes, meters, et cetera are to be adjusted as necessary by others prior to construction unless the plans specifically call for their adjustment by the Contractor or unless the plans specifically identify a utility to be adjusted by its owner during construction. Existing utilities and their location, as shown on the plans represent the best information obtainable for design and shall be field verified. The contractor will be required to work around existing utilities within the right-of-way which do not conflict with proposed construction.

3. Contractor shall not start work on the project until the project inspector is assigned to the project and is present on the site. Contractor shall not start on the project until all necessary bonds and permits have been obtained. Bonds may include but are not limited to Statutory, Performance & Maintenance for areas in public right-of-way and easement. For projects within the City of Wichita contact Tom Mason (268-4574). Any work done without inspection will be required to be uncovered for inspection.

4. Cuts made to paved surfaces on public property will be repaired by the City's contractor and charged against the owner/applicant. Unit repair prices are available from the City at 268-4418. A surcharge may be applicable: call 268-4418 for details. Repair costs to be paid prior to release of sewer service if sewer service is affected. Contractor shall obtain permit prior to construction.

5. Rubble from the removal of miscellaneous structures and excess excavation which is to be wasted shall be disposed of on sites to be provided by the Contractor. These sites shall be approved by the Engineer as to suitability, appearance and site location. Locations that, in the opinion of the Engineer, will leave an unsightly appearance will not be approved. All disposal sites must be approved by the Kansas Department of Health and Environment. Material either stockpiled or disposed of in a flood plain would require a Kansas State Board of Agriculture permit. Any material dumped in waters of the United States or wetlands is subject to U.S. Corps. of Engineers permitting regulations. Any material buried or stockpiled beyond approved construction limits would require additional archaeological investigations unless buried in a previously approved borrow location.

6. All storm sewers shall be installed in accordance with the most recent edition of City of Wichita, Kansas Standard Specifications for the Construction of City Projects.

7. All disturbed R/W areas not intended for pavement or sidewalk construction shall be seeded with Kansas Premium Fescue Blend at a rate of 8 lb./1000 Sq. Ft., fertilized with a 16-20-6 ratio at a rate of 4 lb./1000 Sq. Ft., and mulched with Prairie Hay at a rate of 92 lb./1000 Sq. Ft. Mulch shall be "patted" with forks or punched into soil to reduce loss due to wind.

8. Removal and replacement of pavement shall not be paid for directly, but shall be considered incidental to other items in the project.

Location Map

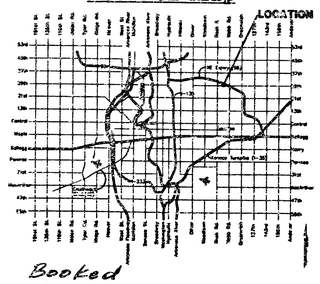

Booked
E-7
12/19/03
RDL

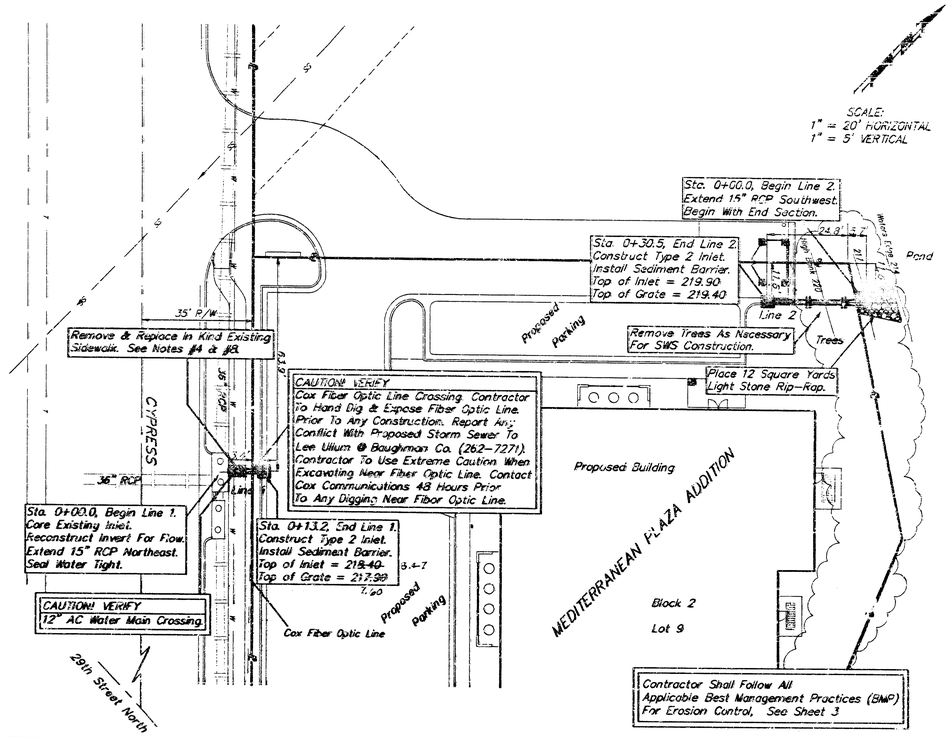

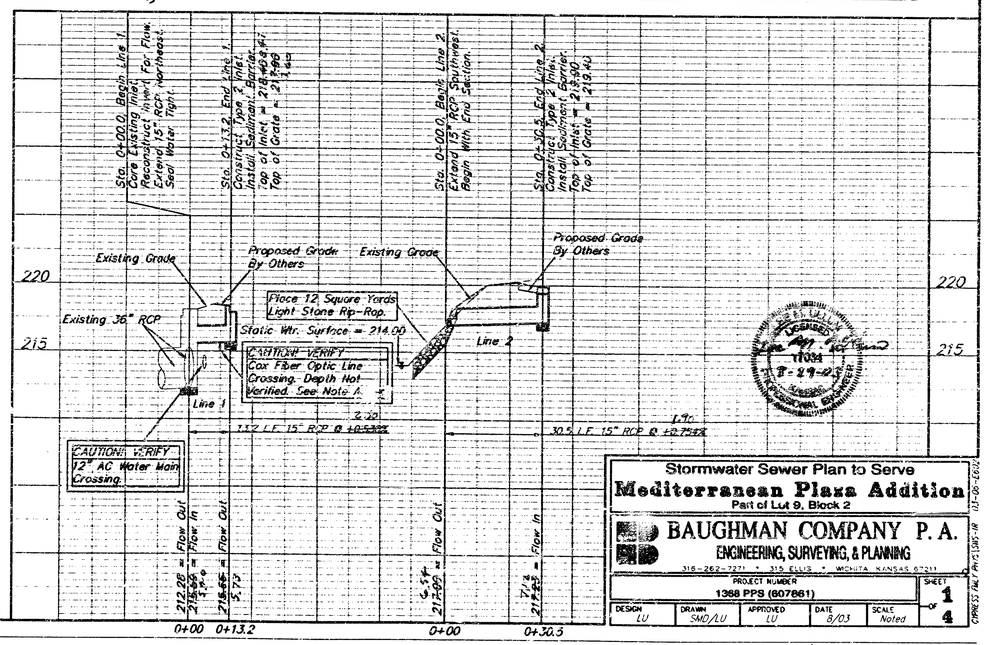

Stormwater Sewer Plan to Serve
Mediterranean Plaza Addition
Part of Lot 9, Block 2

BAUGHMAN COMPANY P.A.
ENGINEERING, SURVEYING, & PLANNING
316-262-7271 • 315 ELVIS • WICHITA, KANSAS 67211

PROJECT NUMBER 1388 PPS (807661) SHEET 1 OF 4

DESIGN	DRAWN	APPROVED	DATE	SCALE
LU	SMD/LU	LU	8/03	Noted

03-06-1602
CAD#03 INC Pln\1388-1R

8 14 3

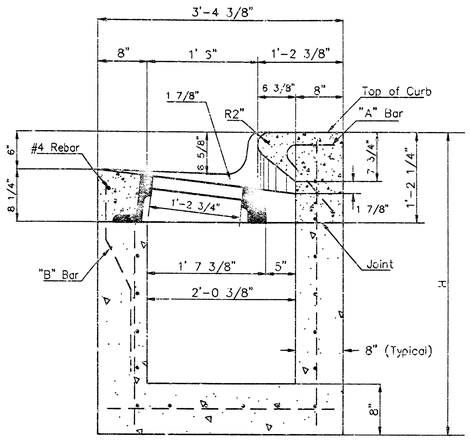

SECTION A-A

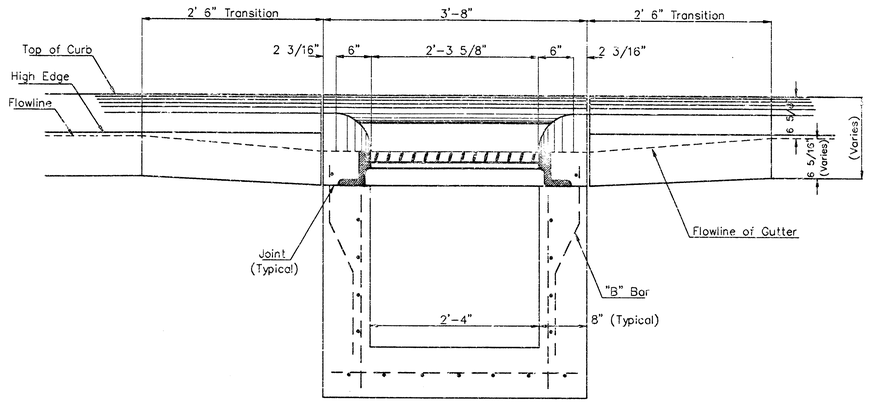

SECTION C-C

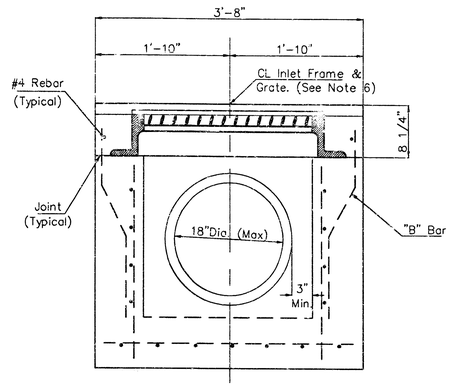

SECTION D-D

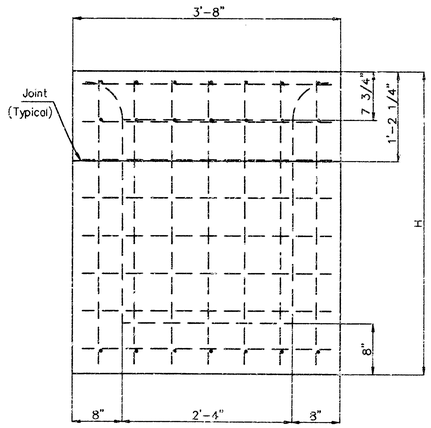

REAR WALL

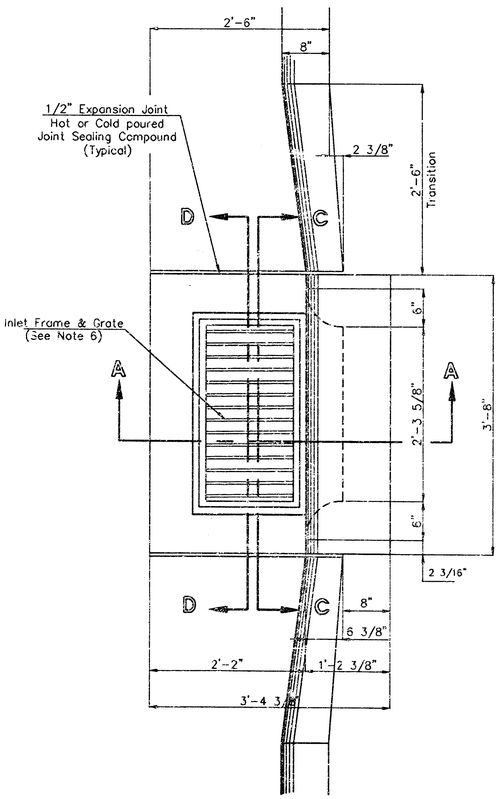

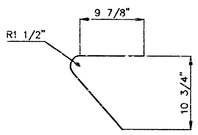

"A" Bar

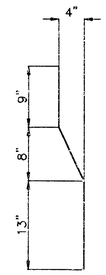

"B" Bar

General Notes

1. Use the concrete mix specified for the City of Wichita concrete pavement throughout. All exposed edges shall be finished with an edging tool. Reinforcing bars shall be bent around pipe.
2. Inlet invert shall be shaped with 8 sack mix concrete to create flow channels and to increase hydraulic efficiency such that the inlet will be self cleaning between all inlet and/or outlet pipes.
3. All bars are #4 with 6" spacing and shall have a minimum clearance of 1 1/2" inches unless otherwise noted on the plans.
4. When directed by the Engineer, a small opening may be required in the back of the inlet in order to drain a low area. Reinforcing bars will extend through the openings. No deductions in concrete quantities will be made for these openings.
5. No deductions will be made in pay length of curb, gutter, or curb and gutter through the inlet area.
6. Use Neenah R-3289 HV Single Inlet Frame and Grate or approved equal. Inlet frame to be proof load tested to 40,000 lbs. on unsupported side.
7. Reinforcing bars shall be cut or bent around pipes. No deduction in concrete quantities shall be made for pipe openings.
8. The vanes of the grate shall be oriented with respect to the flow arrows shown on the plans.

CITY OF WICHITA

STD. TYPE II CURB INLET

INLET OPENINGS - 8"x2'-3 5/8"

BAUGHMAN COMPANY P.A.
ENGINEERING, SURVEYING, & PLANNING
316-262-2271 • 315 ELLIS • WICHITA, KANSAS 67211

PROJECT NUMBER	SHEET
1388 PPS (607661)	2 of 4

DESIGN	DRAWN	APPROVED	DATE	SCALE
Staff	Staff	Staff	8/03	NONE

CYPRESS DALY PRINTS | 9x12 | 001-08-4600

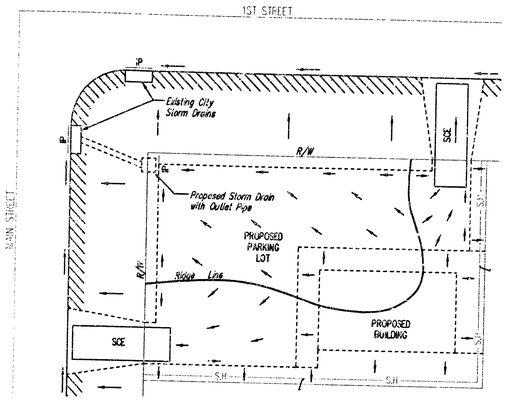

General Notes

1. This standard detail sheet is a part of your building permit. The BMP's shown on this sheet are considered minimum standards. Wherever sediment enters the streets, storm sewers, ditches, or ponds, contractor will install additional BMP's, as needed, to correct the problem.
2. Follow these general principals on all commercial building sites.
3. The soil erosion BMP's shown hereon must be in place at all times during construction until such time as the site is re-established with paving or grass.
4. Failure to install, protect, and maintain BMP's are violations of Section 15.12 of the City Code and will subject the contractor to the penalties provided therein. Included with your permit is an orange "notice" sign that must be posted on-site in a conspicuous place at all times during construction. This sign is provided to assist you in the maintenance of BMP'S.
5. Back of Curb Protection: Can include hay bale, silt fence, or Curlex barrier, as shown on City BMP standard details. This BMP must remain in place until the area between the curb and right-of-way line has been permanently stabilized.
6. The General Contractor is responsible for the installation and maintenance of all BMP's.
7. Should the site abut a lake, BMP's will be installed to prevent sediment from entering the lake.
8. Any mud inadvertantly tracked onto any street will be cleaned up by the general contractor at the end of each day's work.

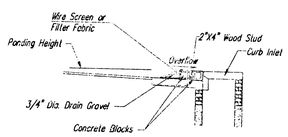

SECTION A-A

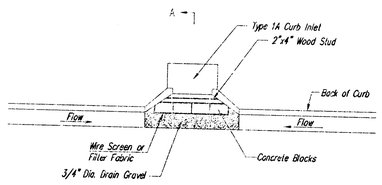

CURB INLET GRAVEL FILTERS
(INLET PROTECTION-RESIDENTIAL STREETS ONLY)

NOTE: Other types of curb inlet protection may be approved by the city so long as equal protection is provided.

A gravel inlet filter shall be installed at sump locations on residential streets. This type of protection is not to be used on arterial or collector streets at any time that it would pose an undue traffic hazard.

Instructions for installing:

STEP 1: Place concrete blocks around the inlet as shown on drawing. Insert 2x4 board as shown.
STEP 2: Wrap 1/2" mesh wire screen around the concrete blocks.
STEP 3: Place 1" to 1-1/2" diameter rock around the blocks and wire screen. Be sure the rock extends down from the top of the concrete block.
STEP 4: To prevent damage to vehicles, signs warning drivers about the structures may be necessary. An alternative installation is the use of gravel bags supported by a 2"x4" board to prevent collapsing.

Use of rock with diameters smaller than 1" in the bag may result in clogging of pores and reduce the amount of water flowing into an inlet.

Maintenance:

All curb inlet gravel filters shall be inspected and repaired after each runoff event. Sediment deposits are to be removed once material is within 8 cm (3 inches) of the top of any block. Periodically, the gravel shall be raked to increase infiltration and filtering of runoff waters. Accumulated sediment is to be removed immediately from roads and streets.

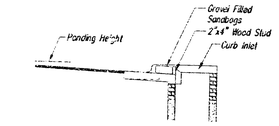

SECTION B-B

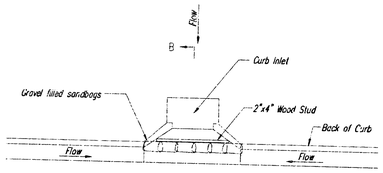

CURB INLET SANDBAG FILTERS
(INLET PROTECTION)

NOTE: Other types of curb inlet protection may be approved by the City so long as equal protection is provided.

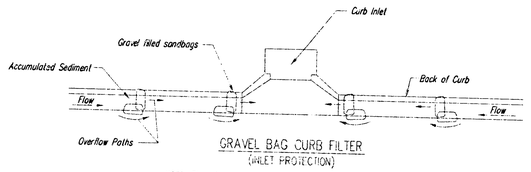

GRAVEL BAG CURB FILTER
(INLET PROTECTION)

NOTE: Place two or more sets of bags in a manner that results in maximum support. The flow line bag must be lower than top of curb.

CURB SEDIMENT TRAPS

When inlets are located on streets having a grade (i.e., sump conditions do not exist), installing gravel (or sand) bags in the gutter flow line to create small sediment traps can be considered. Gravel bags are recommended over sand bags to allow for drainage.

If the spacing between bags becomes too large, little sediment may be trapped. Spacing of bags should be completed using the table or graph that illustrates placement distances based upon street slope. When installed in the gutter, bag tops must be lower than the sidewalk.

Spacing:

Gravel bags are to be placed according to street grades using the following table or graph that appears below.

GRADE (%)	SPACING (FEET)
0.5	75
1.0	45
2.0	18
3.0	12
4.0	9
5.0	6

Maintenance:

Collected sediment shall be removed after every runoff event. Bags that are destroyed by vehicular traffic or through natural deterioration are to be immediately replaced.

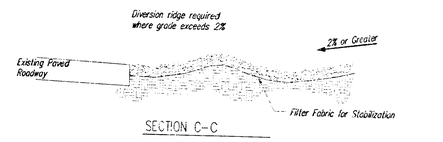

SECTION C-C

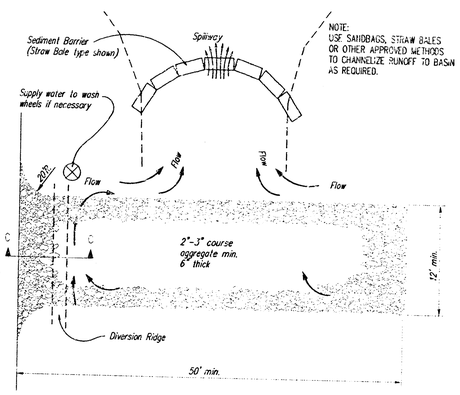

STABILIZED CONSTRUCTION ENTRANCE

NOTES:

1. THE ENTRANCE SHALL BE MAINTAINED IN A CONDITION THAT WILL PREVENT TRACKING OR FLOWING OF SEDIMENT ONTO PUBLIC RIGHTS-OF-WAY. THIS MAY REQUIRE TOP DRESSING, REPAIR AND/OR CLEANOUT OF ANY MEASURES USED TO TRAP SEDIMENT.
2. WHEN NECESSARY, WHEELS SHALL BE CLEANED PRIOR TO ENTRANCE ONTO PUBLIC RIGHT-OF-WAY.
3. WHEN WASHING IS REQUIRED, IT SHALL BE DONE ON AN AREA STABILIZED WITH CRUSHED STONE THAT DRAINS INTO AN APPROVED SEDIMENT TRAP OR SEDIMENT BASIN, AS SHOWN ABOVE.
4. DRIVE ENTRANCES ONTO RESIDENTIAL LOTS WILL NOT BE REQUIRED TO HAVE THE SEDIMENT BARRIER SHOWN, BUT WHEEL WASHING MAY BE REQUIRED IF STABILIZED ENTRANCE IS NOT SUFFICIENT TO KEEP MUD FROM BEING TRACKED ONTO ADJACENT STREET. ENTRANCE SHALL EXTEND FROM BACK OF CURB TO DWELLING.

CITY OF WICHITA

SOIL EROSION BMP DETAILS

CHRISTOPHER M. CARRIER, P.E.
STORM WATER ENGINEER

PROJECT NUMBER	CFA NO.
1368 PPS (607861)	NA
DATE	SHEET 3 OF 4
08/03	

D 6-31 A

FINAL PLAT OF

MEDITERRANEAN PLAZA

AN ADDITION TO WICHITA, SEDGWICK COUNTY, KANSAS

Lot No.	Block No.	Minimum Pad Elev. Datum	Minimum Pad (U.S.G.S.)
10	1	219.5	1406.9
11	1	219.5	1406.9
12	1	219.5	1406.9
13	1	219.5	1406.9
8	2	219.5	1406.9
9	2	218.5	1405.9
1	3	225.5	1412.9
2	3	225.5	1412.9
3	3	225.5	1412.9
4	3	225.5	1412.9

