PRIVATE STORM SEWER
LOT 12, BLOCK 1, REGENCY PARK ADDITION
PRIVATE PROJECT NUMBER 1421 PPS (607861)

GENERAL NOTES

1. Contractor will be required to provide a minimum advance notice of fourty-eight (48) hours to utility companies prior to starting any excavation as follows:

   Kansas One-Call 687-2470

   The Contractor must notify the following in case of an emergency:

Cox Communications	2[illegible]-0661
Kansas Gas Service	383-8600
Westar	383-8600
Aquila Energy	1-800-303-0357
Southwestern Bell Telephone Company	1-800-286-8313
City of Wichita Water Department	262-6000
City of Wichita Sewer Maintenance	262-6000

2. Existing utilities and their location, as shown on the plans, represent the best information obtainable for design. Location information has been obtained from the various utility companies and is either from company record drawings or company-provided field locations. The Contractor will be required to work around existing utilities within the right-of-way which do not conflict with proposed construction.

3. A saw cut of the full depth of existing surface courses or pavement thickness shall be provided at locations where proposed construction abuts an existing surface course or pavement for which partial removal of that surface or pavement is required, except when such saw cuts are within three (3) feet of an existing joint the limits of removal shall be extended to the existing joint.

4. Rubble from the removal of miscellaneous structures and excess excavation which is to be wasted shall be disposed of on sites to be provided by the Contractor. These sites shall be approved by the Engineer as to suitability, appearance and site location. Locations that, in the opinion of the Engineer, will leave an unsightly appearance will not be approved.

5. All disposal sites must be approved by the Kansas Department of Health and Environment. Material either stockpiled or disposed of in a flood plain would require a Kansas State Board of Agriculture permit. Any material dumped in waters of the United States or wetlands is subject to U.S. Corps permitting regulations. Any material buried or stockpiled beyond approved of Engineers construction limits would require additional archeological investigations unless buried in a previously approved borrow location.

6. This project is located within the limits of a larger project which will include building construction. The General Contractor for the project will submit a Storm Water Pollution Prevention Plan for the entire project prior to beginning any work on this street project.

7. This project is to be constructed in accordance with City of Wichita Standard Specifications for the Construction of City Projects, and Policy on Construction of Public Works Improvements by Private Contract.

8. No work shall begin on this project before required bonds are submitted to the City of Wichita, and the project inspector has been notified.

9. All areas of public R/W disturbed by construction of this project are to be restored in accordance with Administrative Regulation AR 78 of the City of Wichita.

10. Precast concrete inlet construction maybe used at contractor's option, with approval of submittal drawings by Engineer.

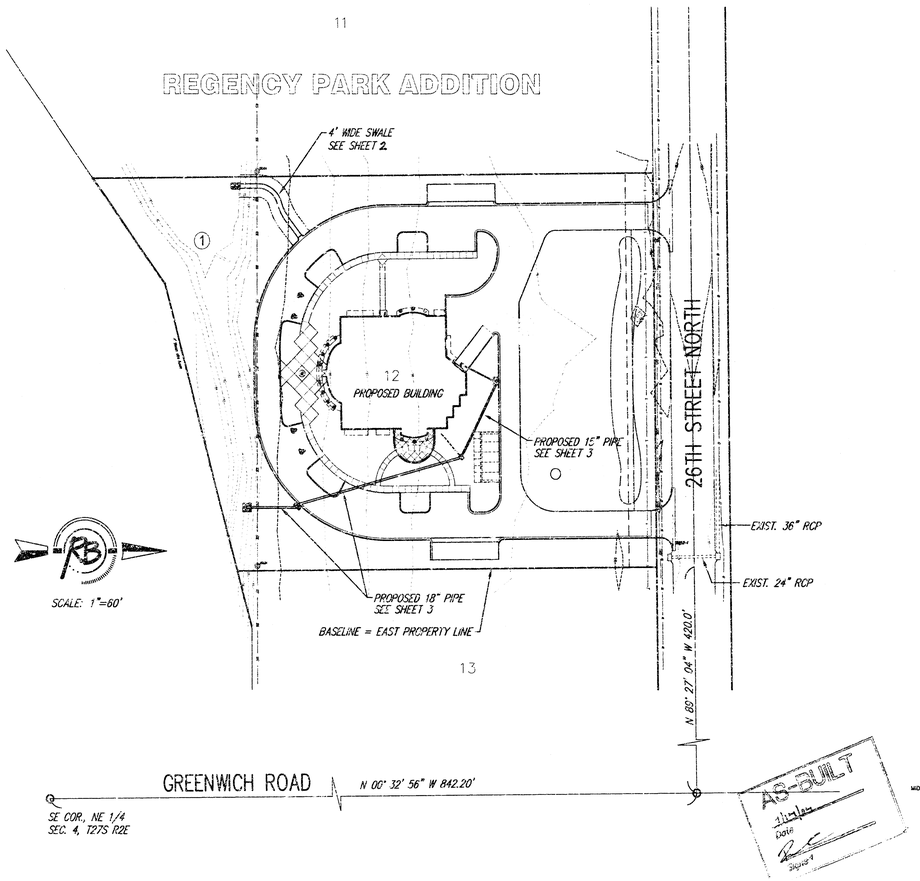

AS-BUILT
[illegible]
Date
[illegible]

INDEX OF SHEETS

1. COVER SHEET
2. SITE GRADING PLAN
3. STORM SEWER PLAN & PROFILE
4. TYPE I CURB INLET DETAILS
5. DROP INLET DETAILS

BENCHMARKS

ALL ELEVATIONS SHOWN ARE CITY OF WICHITA DATUM. (U.S.G.S. - 1187.4 = CITY DATUM)

BM Datum - Spike in west face of high line pole, east side of Greenwich Road, in first pole north of K-96 Highway.
Elev.= 184.45 (NGVD29= 1371.85)

BM #12-1 - City of Wichita Brass Disk in top of south curb of 26th Street North, 420'\ west of center of Greenwich Road near northeast corner of Lot 12, Block 1, Regency Park Addition, at fire hydrant.
Elev.= 189.33 (NGVD29= 1376.73)

LEGAL DESCRIPTION
Lot 12, Block 1, Regency Park Addition
an addition to Wichita, Sedgwick County, Kansas

APPROVED AS NOTED
BY CITY ENGINEER OF WICHITA

Sanitary Sewers _____
Storm Sewers VRH 3/17/04
Driveway Approaches _____
Water Mains _____
Paving _____

NOTE TO CONTRACTORS

Inspection and testing for this project are to be provided by a Licensed Consulting Engineering Firm under contract with the Owner/Developer. Said inspection to be in accordance with the City of Wichita standard construction engineering practices and certified by a Licensed Professional Engineer. No work shall be performed in dedicated easements or public right-of-way by the Contractor without such inspection, nor shall any work be commenced without written authorization by the City Engineer.

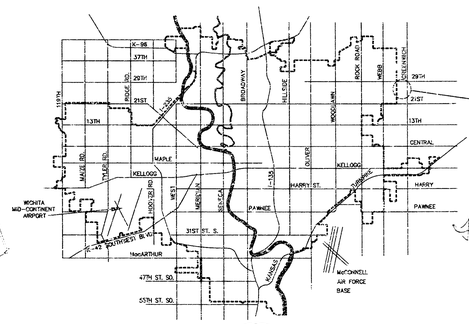

CITY OF WICHITA, KANSAS
JAMES R. ARMOUR, P.E., CITY ENGINEER

Ruggles & Bohm, P.A.
Engineering, Surveying, Land Planning
924 North Main (316) 264-8008
Wichita, Kansas 67203 (316) 264-4621 fax
www.rbkansas.com E-mail: info@rbkansas.com

2467E

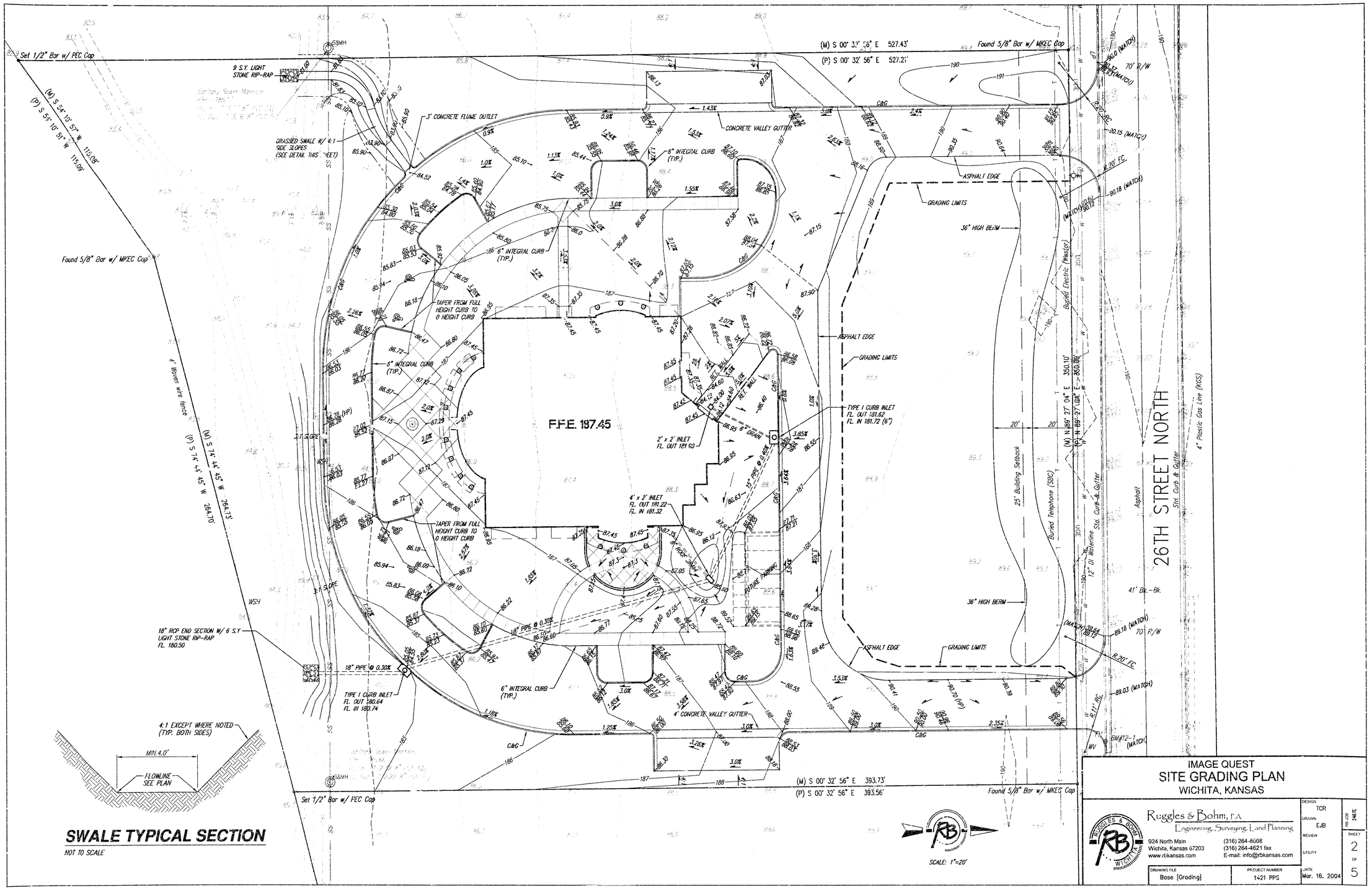

IMAGE QUEST
SITE GRADING PLAN
WICHITA, KANSAS

Ruggles & Bohm, P.A.
Engineering, Surveying, Land Planning
924 North Main
Wichita, Kansas 67203
www.rbkansas.com
(316) 264-8008
(316) 264-4621 fax
E-mail: info@rbkansas.com

DESIGN	TCR
DRAWN	EJB
REVIEW	
UTILITY	
DATE	Mar. 16, 2004
RB JOB	1421E
SHEET	2 OF 5
DRAWING FILE	Base {Grading}
PROJECT NUMBER	1421 PPS

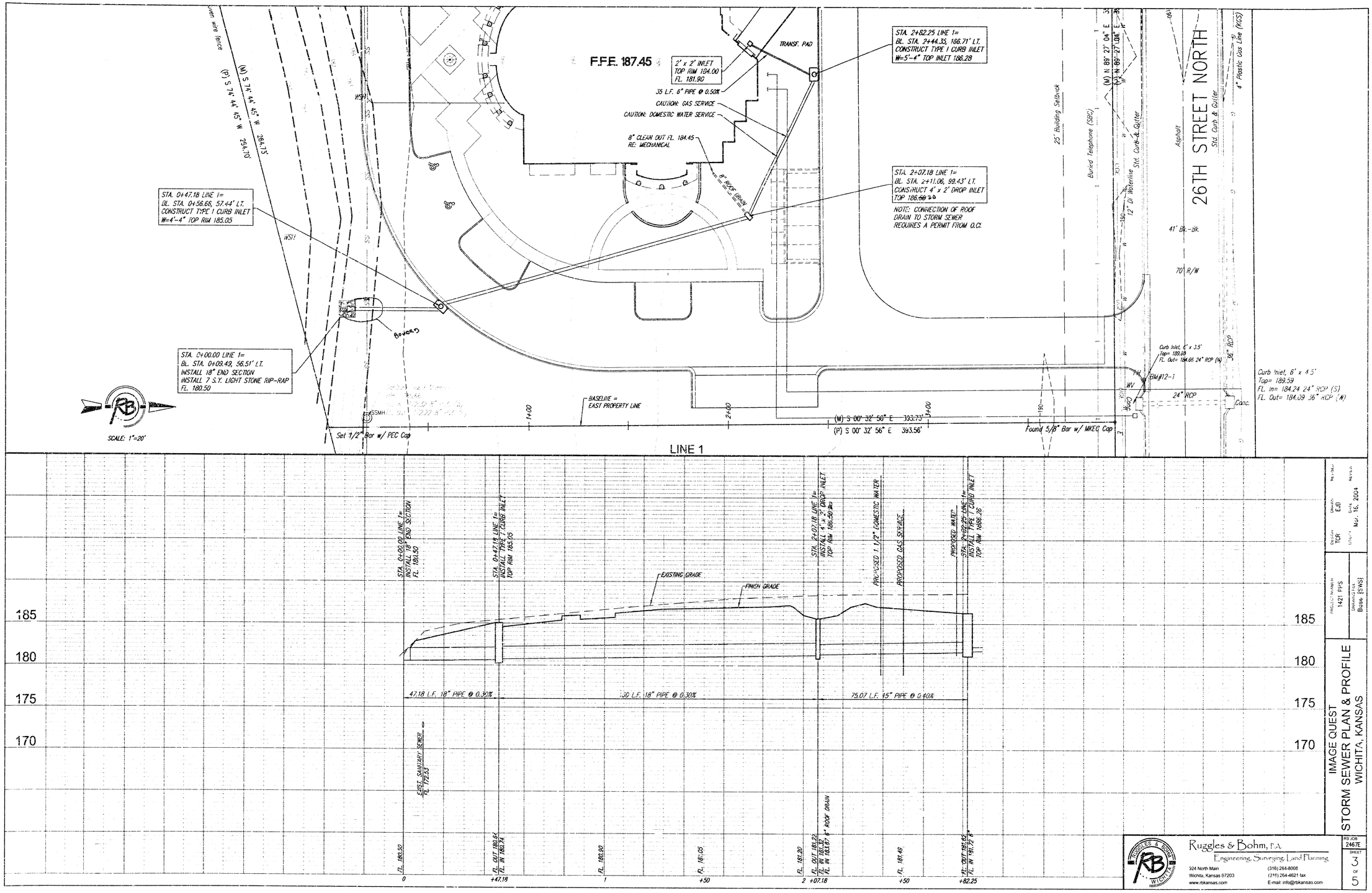

DESIGN: TCR
DRAWN: EJB
DATE: Mar. 16, 2004
REVISED
REVISED
PROJECT NUMBER: 1421 PPS
DRAWING FILE: Base (SWS)

IMAGE QUEST
STORM SEWER PLAN & PROFILE
WICHITA, KANSAS

Ruggles & Bohm, P.A.
Engineering, Surveying, Land Planning
924 North Main
Wichita, Kansas 67203
www.rbkansas.com
(316) 264-8008
(316) 264-4621 fax
E-mail: info@rbkansas.com

RB JOB 2467E
SHEET 3 OF 5

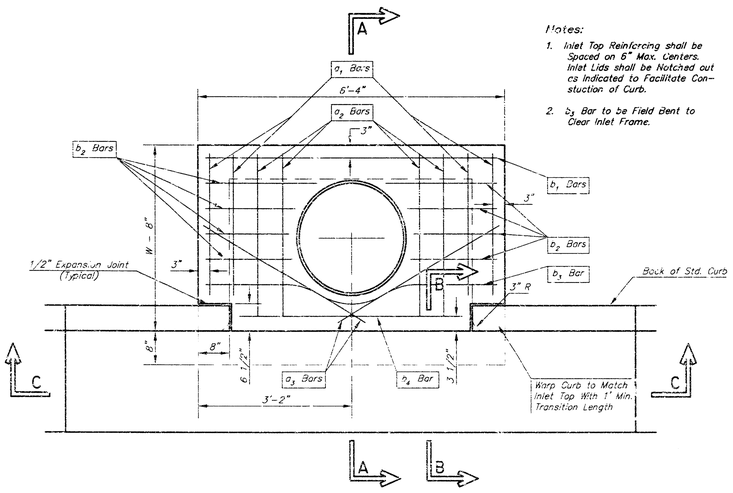

PLAN

Notes:

1. Inlet Top Reinforcing shall be Spaced on 6" Max. Centers. Inlet Lids shall be Notched out as Indicated to Facilitate Construction of Curb.
2. b_3 Bar to be Field Bent to Clear Inlet Frame.

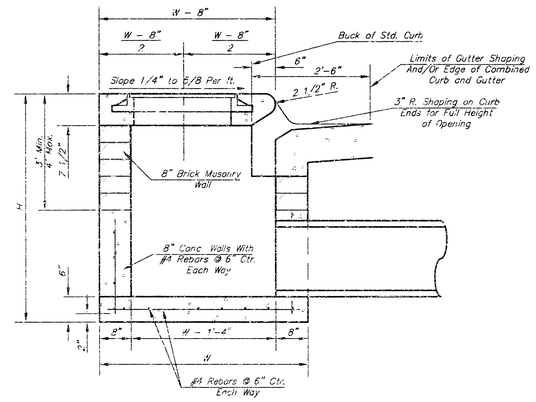

SECTION A-A

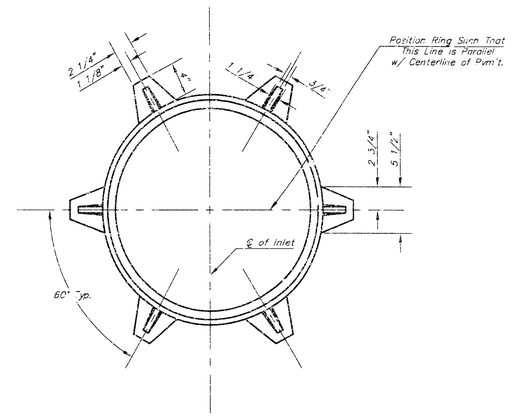

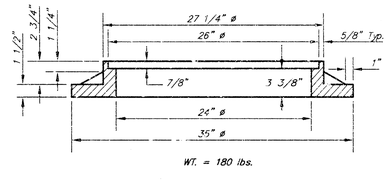

WT. = 180 lbs.

MANHOLE RING AND COVER

*See City of Wichita Standard Manhole Ring and Cover Detail Sheet for Cover Details to Be Used With Inlet Frame.

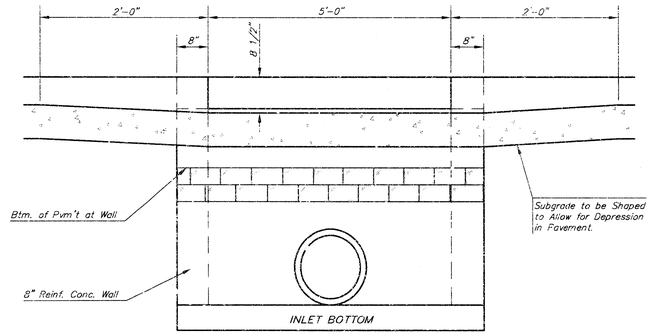

SECTION C-C

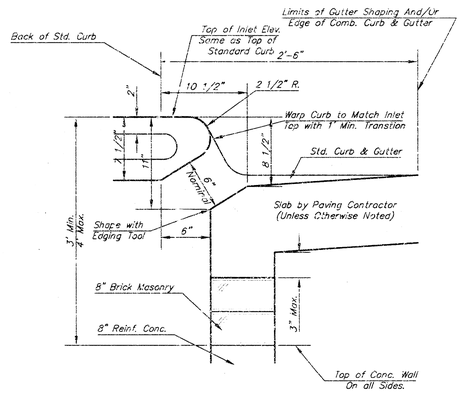

SECTION B-B

STEEL SCHEDULE

BAR		a_1	a_2	a_3	a_4 W=4'-4"	W=5'-4"	W=6'-4"	W=7'-4"	W=8'-4"	b_2	b_3	b_4	Wt. Lbs.
NUMBER		4	4	2	1	3	5	7	9	6	1	1	
SIZE		#4	#4	#4	#4	#4	#4	#4	#4	#4	#4	#6	
LENGTH	W=4'-4"	5'-7"	6'-7"	4'-0"	6'-1"	–	–	–	–	1'-9"	6'-2"	4'-8"	50±
	W=5'-4"	7'-7"	8'-1"	5'-0"	–	6'-1"	–	–	–	1'-9"	6'-2"	4'-8"	81±
	W=6'-4"	9'-7"	10'-7"	6'-0"	–	–	6'-1"	–	–	1'-9"	6'-2"	4'-8"	101±
	W=7'-4"	11'-7"	12'-7"	7'-0"	–	–	–	6'-1"	–	1'-9"	6'-2"	4'-8"	121±
	W=8'-4"	13'-7"	14'-7"	8'-0"	–	–	–	–	6'-1"	1'-9"	6'-2"	4'-8"	141±

Note: a_3 Bars to be Placed Approx. 2" Below Top of Inlet Cover.

STANDARD CURB INLET PRECAST TOPS			
W	PRE-CAST TOP SIZE	PIPE SIZE	CU. YD. CONC.
4'-4"	3'-8" 6'-4" 7 1/2"	21" & SMALLER	0.38±
5'-4"	4'-8" 6'-4" 7 1/2"	24" & 30"	0.51±
6'-4"	5'-8" 6'-4" 7 1/2"	36" & 42"	0.64±
7'-4"	6'-8" 6'-4" 7 1/2"	48" & 54"	0.77±
8'-4"	7'-8" 6'-4" 7 1/2"	60" & 66"	0.90±

GENERAL NOTES

1. Concrete tops to be installed on thin mortar cushion to insure full support along brick walls. Concrete tops may be cast in place or precast. Concrete used for inlet construction shall be concrete pavement mix.
2. Contractor shall have the option of constructing 8" brick masonry walls between the concrete inlet base and top on this inlet when W=5'-4" and H=7'-3" or less.
3. Inlet invert shall be shaped with 8 sack sand mix concrete to create flow channels and to increase hydraulic efficiency such that the inlet will be self cleaning between all inlet and/or outlet pipes.
4. The ends of all pipes installed in inlets shall be cut off flush with the inside face of the inlet wall.

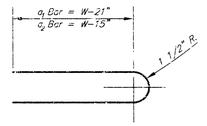

BENDING DIAGRAM

THE CITY OF WICHITA
CITY ENGINEER'S OFFICE
CITY HALL - SEVENTH FLOOR
455 NORTH MAIN STREET
WICHITA, KANSAS 67202
(316) 268-4351
(316) 268-4114 FAX

STANDARD TYPE 1 CURB INLET OPENING = 6"x5'-0"

– CITY ENGINEER

PROJECT NUMBER 1421 PPS

OCA #

DATE MAR 96

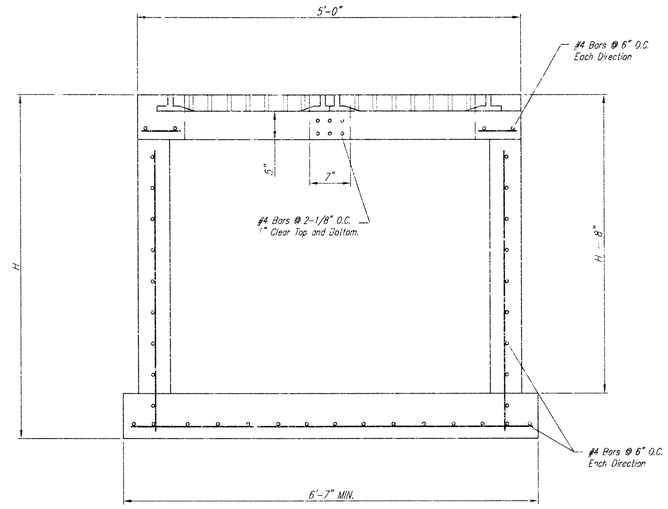

SECTION X-X

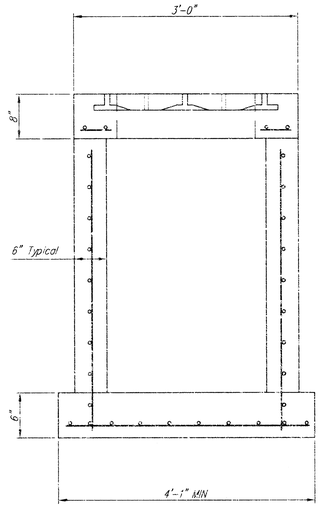

SECTION Y-Y

4' x 2' inlet

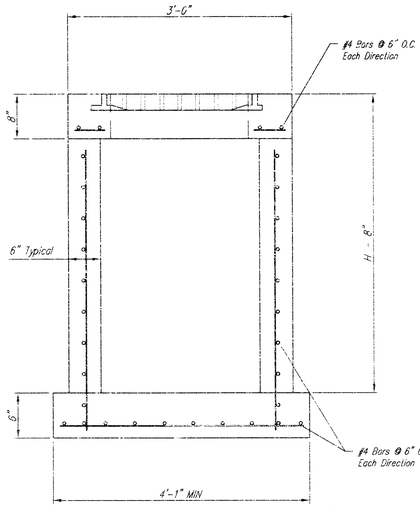

SECTION X-X

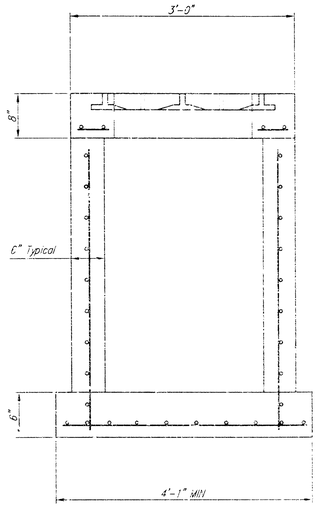

SECTION Y-Y

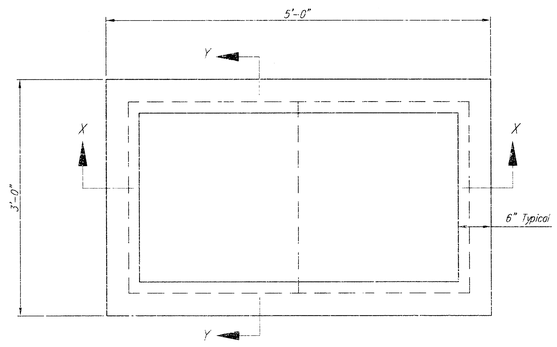

PLAN

4' x 2' inlet

NOTES:

1. FRAME AND GRATE TO BE 2 EA. GCI CASTINGS, INC. GR 3027, 2 EA. BEETER FOUNDRY 2512, OR EQUIVALENT
2. CONCRETE USED IN INLET CONSTRUCTION TO BE CLASS A OR CLASS A (AE).
3. FLOOR OF INLET TO BE SHAPED TO DRAIN, USING UNREINFORCED CLASS A CONCRETE.
4. INLET MAY BE PRE-CAST WITH ENGINEER'S APPROVAL OF SHOP DRAWING SUBMITTAL.

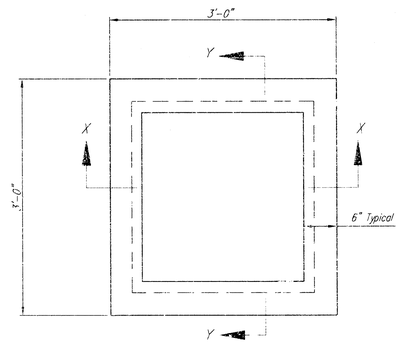

PLAN

2' x 2' inlet

IMAGE QUEST
2' x 2' & 4' x 2' INLET DETAILS
WICHITA, KANSAS

Ruggles & Bohm, P.A.
Engineering, Surveying, Land Planning
924 North Main
Wichita, Kansas 67203
www.rbkansas.com
(316) 264-8008
(316) 264-4621 fax
E-mail: info@rbkansas.com

DESIGN	TCR
DRAWN	EJB
REVIEW	
UTILITY	
DATE	Mar. 16, 2004
DRAWING FILE	Base [4x2 inlet]
PROJECT NUMBER	1421 PPS
REV. JOB	2467E
SHEET	5 OF 5

18 11 10 12